NOTES
1. (−W/L) = NEGATIVE WINDLOAD
   (+W/L) = POSITIVE WINDLOAD
2. WALL ANGLES MAY BE WELDED TO STEEL JAMB. SEE SHEET 2 FOR WELDING DETAILS.
3. RATED DESIGN LOAD ±65 PSF.
4. CURTAIN MATERIAL: ASTM A−653 CS TYPE B. GUIDE MATERIAL: ASTM A−36
5. ALTERNATE CURTAIN MATERIAL: AISI−304 SS. MINIMUM YIELD 40,000 PSI.
6. CURTAIN MATERIAL SHALL BE GALVANIZED ACCORDING TO ASTM A−525 TO G40 MINIMUM.
7. THE DOOR MUST BE INSTALLED WITH THE TENSION WHEEL FACING THE INSIDE OF THE BUILDING.
8. PINS MUST BE ENGAGED AND CHAIN MUST BE HOOKED WHEN HURRICANE WINDS ARE ANNOUNCED.
9. WIND LOCKS ARE REQUIRED ON EACH SLAT
9. WINDLOCK MATERIAL: LOW CARBON CAST STEEL, GRADE 70−46 (485−250) PER ASTM A27. MIN TENSILE 70−KSI MIN YIELD 36−KSI. MIN ELONG 22%
10. WINDLOCKS ATTACHED TO EACH SLAT (CONTINUOUS)
11. RIVET SPECIFICATION: 1/4" DIAMETER RIVET, MINIMUM 1006 LOW−CARBON STEEL.

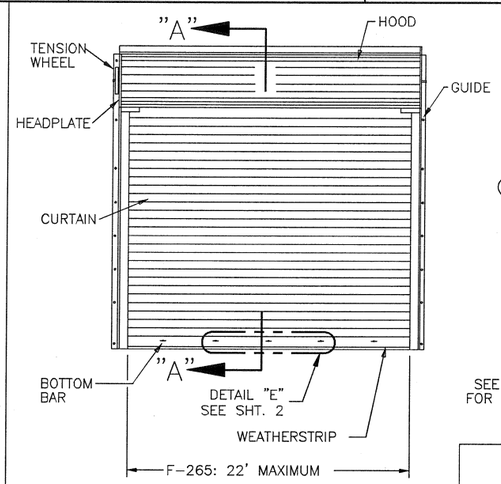

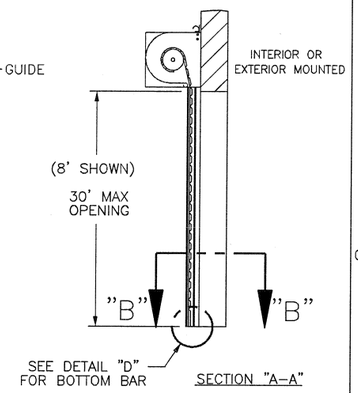

REVISIONS				
ER	REV	DESCRIPTION	DATE	APPROVAL
	F	REV PER EN 20814	6/30/06	LK
500692	G	REV PER ER	3/7/11	SFT
502140	H	REV PER ER	5/3/13	

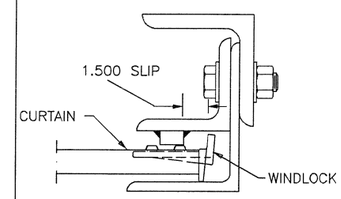

WINDLOCK/WINDBAR RELATIONSHIP DETAIL

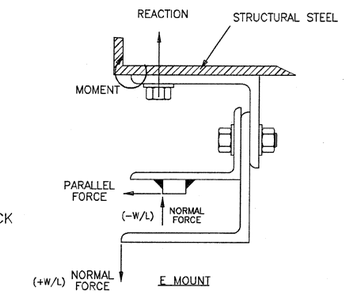

E MOUNT

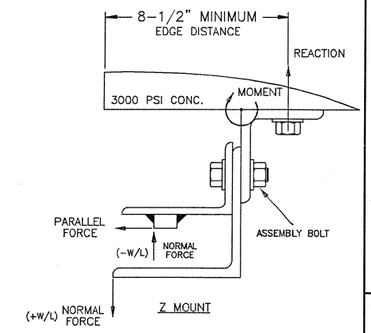

Z MOUNT

* LOADS − PER FOOT OF HEIGHT F−265 − DOOR SIZE REF. SUMMARY

LBS/FT DOOR	(E−MOUNT) LOADS *			(Z−MOUNT) LOADS *		
HEIGHT	22 GA **	20 GA	18 GA	22 GA **	20 GA	18 GA
REACTION	8345	8221	8008	2314	2285	2238
NORMAL	715	715	715	715	715	715
PARALLEL	2391	2365	2304	2391	2365	2304

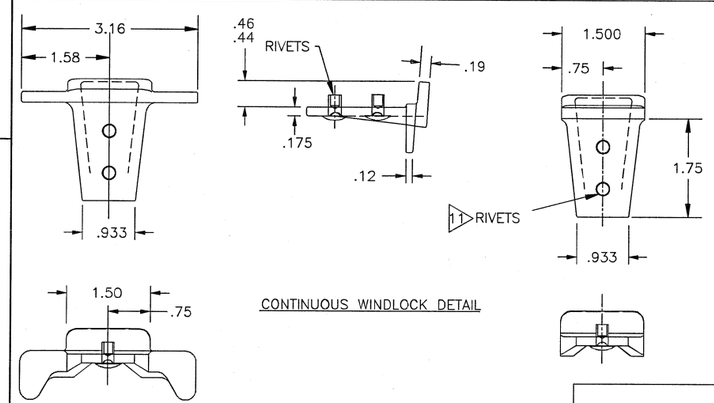

CONTINUOUS WINDLOCK DETAIL

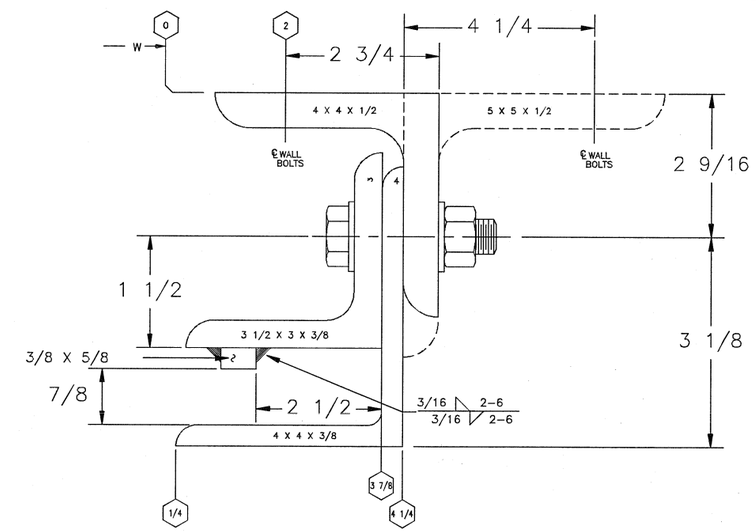

	ASSEMBLY BOLT	WALL BOLT STEEL JAMB	WALL ATTACHMENT CONCRETE JAMB
FIP	5/8" GRADE 5, 10" O.C.	5/8" GRADE 5, 12" O.C.	5/8" X 5 1/2" EMB HILTI KWIK BOLT 3 OR POWERS WEDGE BOLT 9" O.C.

*3000 PSI MINIMUM & 8−1/2" MINIMUM EDGE DISTANCE FOR ANCHORS.

2 NOTE: FOR DETAILS ON WELDING GUIDES TO STEEL JAMBS SEE SHEET 2.

STATE OF TEXAS
MARK A SAWICKI
106291
LICENSED
PROFESSIONAL ENGINEER
8/13/13

PIN MUST BE ENGAGED FOR DOOR TO WITHSTAND DESIGN LOADS

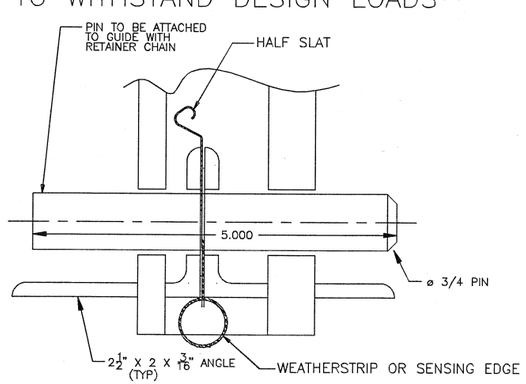

SECTION "C−C"

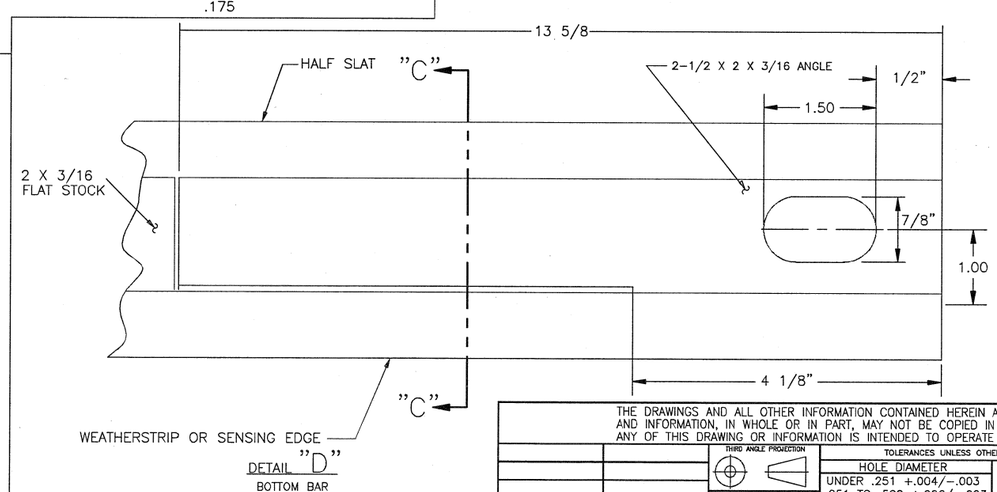

DETAIL "D"
BOTTOM BAR

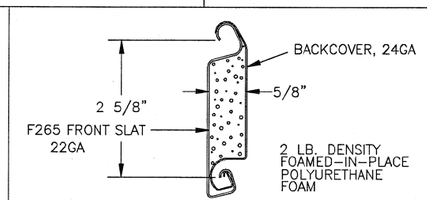

FIP SLAT
GAUGE OPTIONS: 22**, 20, 18
**TESTED IN ACCORDANCE WITH DADE COUNTY PROTOCOLS TAS 201−94, TAS 202−94, AND TAS 203−94

SERIES 626 IS EQUIVALENT CONSTRUCTION

OVERHEAD DOOR CORPORATION
2501 SOUTH STATE HWY 121 BUSINESS
LEWISVILLE, TX 75067

MARK A. SAWICKI, P.E. #72613

THE DRAWINGS AND ALL OTHER INFORMATION CONTAINED HEREIN ARE THE CONFIDENTIAL AND PROPRIETARY PROPERTY OF OVERHEAD DOOR CORPORATION AND ITS AFFILIATED COMPANIES. THIS DRAWING AND INFORMATION, IN WHOLE OR IN PART, MAY NOT BE COPIED IN ANY MANNER OR DISCLOSED TO ANYONE WITHOUT THE PRIOR WRITTEN CONSENT OF OVERHEAD DOOR CORPORATION. NO DISCLOSURE OF ANY OF THIS DRAWING OR INFORMATION IS INTENDED TO OPERATE AS A LICENSE OR AUTHORIZATION TO USE IT FOR ANY PURPOSE WITHOUT THE SPECIFIC WRITTEN CONSENT OF OVERHEAD DOOR CORPORATION.

REF DWG	USED ON

THIRD ANGLE PROJECTION
ASME Y14.100 AND Y14.5 APPLY, UNLESS OTHERWISE SPECIFIED DIMENSIONS ARE IN U.S. CUSTOMARY UNITS.

TOLERANCES UNLESS OTHERWISE SPECIFIED
HOLE DIAMETER: UNDER .251 +.004/−.003; .251 TO .500 +.006/−.003; OVER .500 +.008/−.003
FRACTIONS: ± 1/16
WHOLE NUMBERS: ± .25; .X ± .1; .XX ± .03; .XXX ± .010; ANGLES: ± .5'

FINISH 5
UNIT OF MEASURE N/A
The Genuine. The Original. LEWISVILLE, TEXAS
MATERIAL: 4

	NAME	DATE
DRAWN BY:	G FINERAN	8/8/03
CHECKED BY:	JD FAW	9/5/03
APPROVED BY:	L KRUPKE	9/5/03

DRAWING TITLE: SERIES 625, ROLLING SERVICE DOOR 22 FT. DADE COUNTY
DRAWING NUMBER D− 308134
SCALE: NONE SHEET 1 OF 2

NOTES

1. REFER TO DRAWING 308670.0001 FOR TAG DETAILS
2. FASTENER FOR TAG IS P/N 080276-1004(STEEL DRIVE SCREW). TAG WILL BE MOUNTED IN THE MIDDLE OF THE BOTTOM BAR.

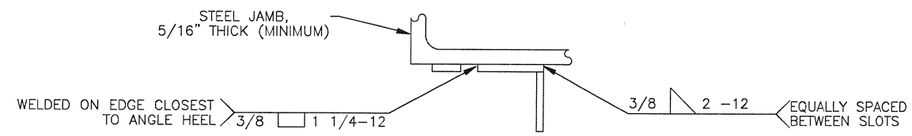

TOP VIEW

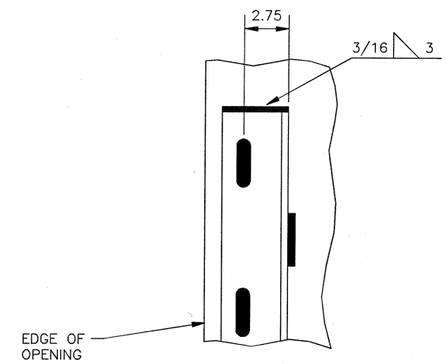

FRONT VIEW OF WALL ANGLE

DETAILS FOR WELDING "E" GUIDES TO STEEL JAMBS

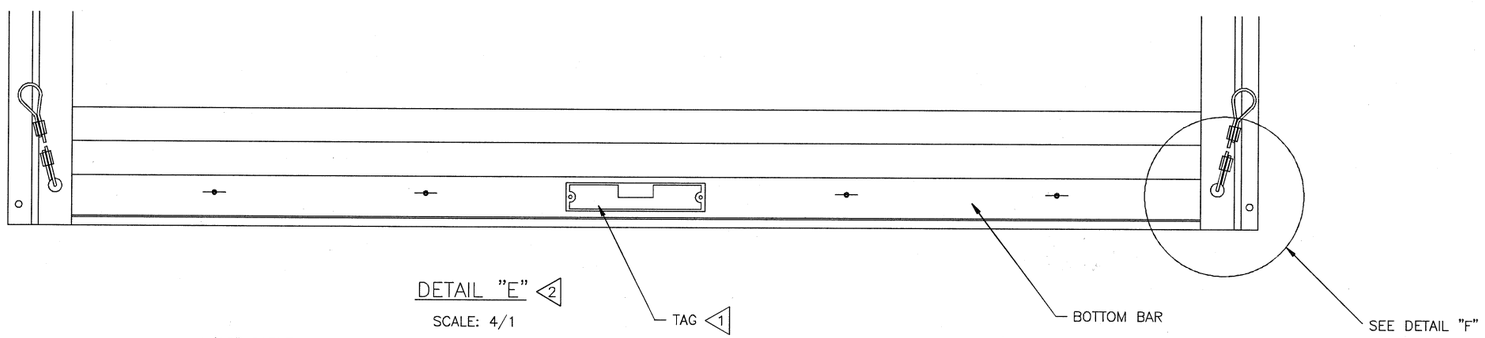

DETAIL "E" 2

SCALE: 4/1

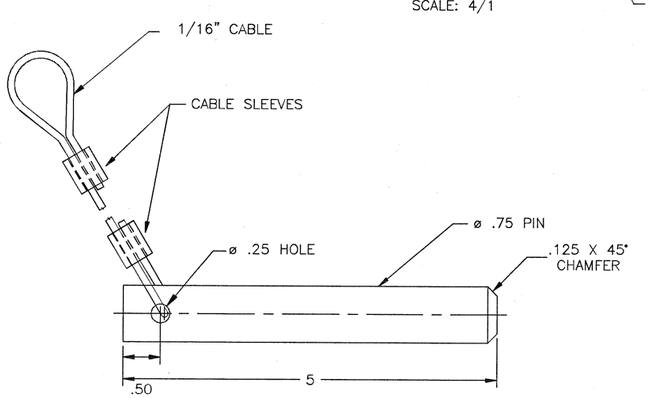

DETAIL "F"

STATE OF TEXAS
MARK A SAWICKI
106291
LICENSED
PROFESSIONAL ENGINEER
11/6/13

OVERHEAD DOOR CORPORATION
2501 SOUTH STATE HWY 121 BUSINESS
LEWISVILLE, TX 75067

MARK A. SAWICKI, P.E. #72613

THE DRAWINGS AND ALL OTHER INFORMATION CONTAINED HEREIN ARE THE CONFIDENTIAL AND PROPRIETARY PROPERTY OF OVERHEAD DOOR CORPORATION AND ITS AFFILIATED COMPANIES. THIS DRAWING AND INFORMATION, IN WHOLE OR IN PART, MAY NOT BE COPIED IN ANY MANNER OR DISCLOSED TO ANYONE WITHOUT THE PRIOR WRITTEN CONSENT OF OVERHEAD DOOR CORPORATION. NO DISCLOSURE OF ANY OF THIS DRAWING OR INFORMATION IS INTENDED TO OPERATE AS A LICENSE OR AUTHORIZATION TO USE IT FOR ANY PURPOSE WITHOUT THE SPECIFIC WRITTEN CONSENT OF OVERHEAD DOOR CORPORATION.

REF DWG	USED ON

THIRD ANGLE PROJECTION

ASME Y14.100 AND Y14.5 APPLY, UNLESS OTHERWISE SPECIFIED DIMENSIONS ARE IN U.S. CUSTOMARY UNITS.

TOLERANCES UNLESS OTHERWISE SPECIFIED

HOLE DIAMETER	WHOLE NUMBERS:	± .25
UNDER .251 +.004/-.003	.X	± .1
.251 TO .500 +.006/-.003	.XX	± .03
OVER .500 +.008/-.003	.XXX	± .010
FRACTIONS	ANGLES:	± .5°
± 1/16		

FINISH: N/A

UNIT OF MEASURE: N/A

The Genuine. The Original. SAMPSON DOORS LEWISVILLE, TEXAS

MATERIAL: N/A

	NAME	DATE
DRAWN BY:	M WOMACK	10/10/03
CHECKED BY:	JD FAW	10/10/03
APPROVED BY:	L KRUPKE	10/10/03

DRAWING TITLE: SERIES 625, ROLLING SERVICE DOOR 22 FT. DADE COUNTY

DRAWING NUMBER D- 308134

SCALE: NOTED

SHEET 2 OF 2