▷ NOTES

1. (−W/L) = NEGATIVE WINDLOAD
   (+W/L) = POSITIVE WINDLOAD
2. WALL ANGLES MAY BE WELDED TO STEEL JAMB. SEE SHEET 2 FOR DOOR WELD DETAIL
3. RATED DESIGN LOAD ±65 PSF.
4. CURTAIN MATERIAL: ASTM A−653, CS TYPE B. GUIDE MATERIAL: ASTM A−36
5. ALTERNATE CURTAIN MATERIAL: AISI−304 SS. MINIMUM YIELD 40,000 PSI.
6. CURTAIN MATERIAL SHALL BE GALVANIZED ACCORDING TO ASTM A−525 TO G40 MINIMUM.
7. THE DOOR MUST BE INSTALLED WITH THE TENSION WHEEL FACING THE INSIDE OF THE BUILDING.
8. SLIDE BOLTS MUST BE ENGAGED AND CHAIN MUST BE HOOKED WHEN HURRICANE WINDS ARE ANNOUNCED
9. WINDLOCK MATERIAL: LOW CARBON CAST STEEL, GRADE 70−46 (485−250) PER ASTM A27. MIN TENSILE 70−KSI MIN YIELD 36−KSI. MIN ELONG 22%
10. WINDLOCKS ATTACHED TO EACH SLAT (CONTINUOUS)
11. RIVET SPECIFICATIONS: 1/4" DIAMETER RIVET, MINIMUM 1006 LOW−CARBON STEEL.

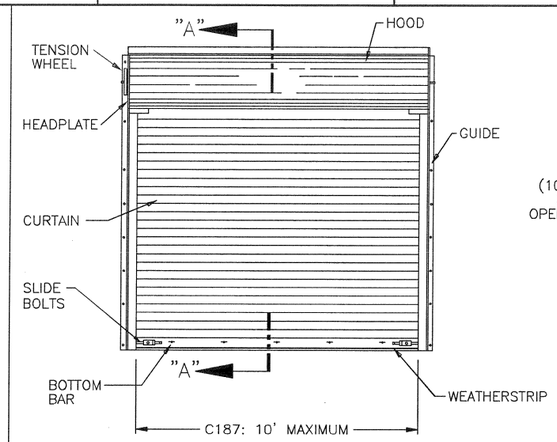

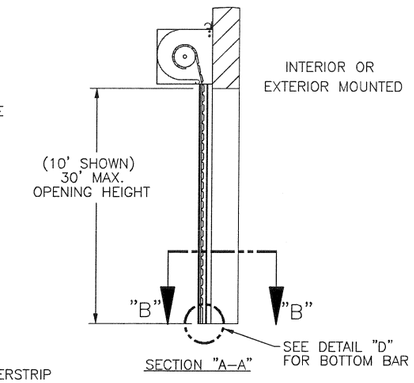

SECTION "A−A"

REVISIONS				
ER	REV	DESCRIPTION	DATE	APPROVAL
	F	REV PER EN 20814	6/30/06	LK
500692	G	REV PER ER	3/7/11	SFT
502140	H	REV PER ER	5/3/13	

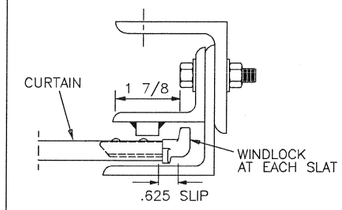

WINDLOCK/WINDBAR RELATIONSHIP DETAIL

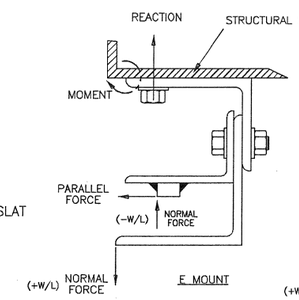

E MOUNT

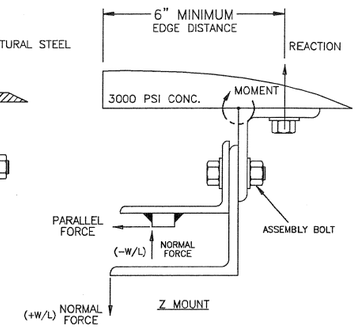

Z MOUNT

* LOADS − PER FOOT OF HEIGHT

C−187 − DOOR SIZE REF. SUMMARY

LBS/FT DOOR HEIGHT	(E−MOUNT) LOADS			(Z−MOUNT) LOADS *		
	22 GA **	20 GA	18 GA	22 GA **	20 GA	18 GA
REACTION	3685	3465	2937	1022	967	842
NORMAL	325	325	325	325	325	325
PARALLEL	958	897	750	958	897	750

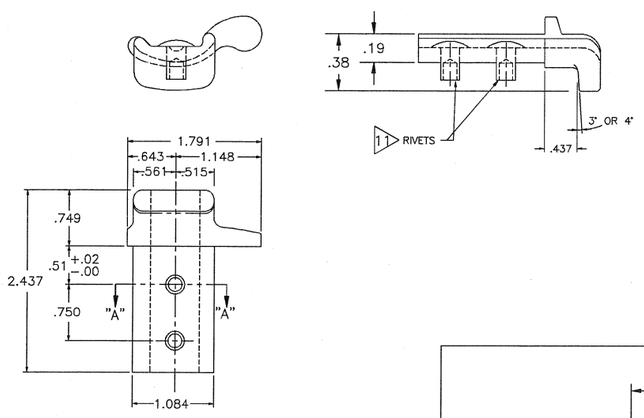

CONTINUOUS WINDLOCK DETAIL

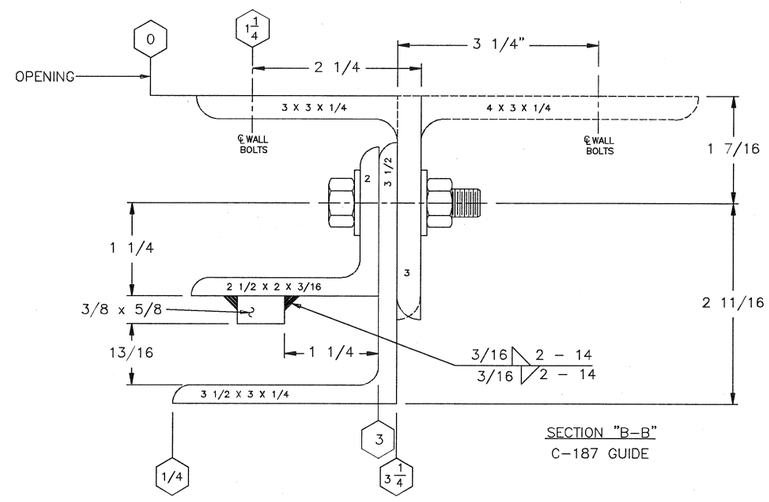

SECTION "B−B"
C−187 GUIDE

	ASSEMBLY BOLT	WALL BOLT STEEL JAMB	WALL BOLT * CONCRETE JAMB
C−187	3/8" GRADE 5, 11" O.C.	3/8" GRADE 5, 11" O.C.	1/2", 4 3/4" EMB HILTI KWIK BOLT 3 OR POWERS WEDGE BOLT 11" O.C.

* 3000 PSI MINIMUM & 6" MINIMUM EDGE DISTANCE FOR ANCHORS

2 ▷ NOTE: FOR DETAILS ON WELDING GUIDES TO STEEL JAMBS SEE SHEET 2.

STATE OF TEXAS
MARK A SAWICKI
106291
LICENSED
PROFESSIONAL ENGINEER
11/6/13

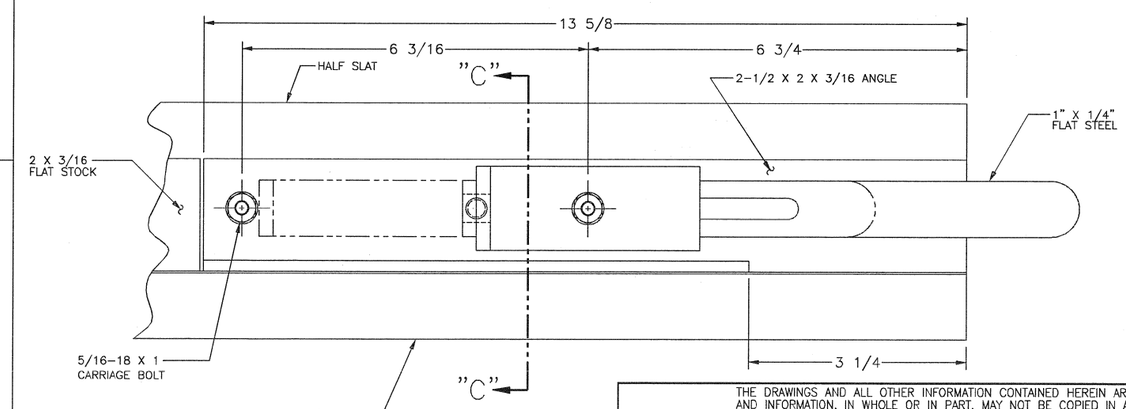

DETAIL "D"
BOTTOM BAR

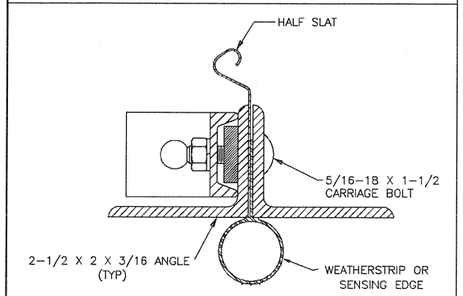

SECT "C−C"

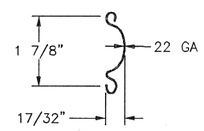

C−187 SLAT
GAUGE OPTIONS: 22**, 20, 18
**TESTED IN ACCORDANCE WITH DADE COUNTY PROTOCOLS TAS 201−94, TAS 202−94, AND TAS 203−94

SERIES 611 IS EQUIVALENT CONSTRUCTION

OVERHEAD DOOR CORPORATION
2501 SOUTH STATE HWY 121 BUSINESS
LEWISVILLE, TX 75067

MARK A. SAWICKI, P.E. #72613

THE DRAWINGS AND ALL OTHER INFORMATION CONTAINED HEREIN ARE THE CONFIDENTIAL AND PROPRIETARY PROPERTY OF OVERHEAD DOOR CORPORATION AND ITS AFFILIATED COMPANIES. THIS DRAWING AND INFORMATION, IN WHOLE OR IN PART, MAY NOT BE COPIED IN ANY MANNER OR DISCLOSED TO ANYONE WITHOUT THE PRIOR WRITTEN CONSENT OF OVERHEAD DOOR CORPORATION. NO DISCLOSURE OF ANY OF THIS DRAWING OR INFORMATION IS INTENDED TO OPERATE AS A LICENSE OR AUTHORIZATION TO USE IT FOR ANY PURPOSE WITHOUT THE SPECIFIC WRITTEN CONSENT OF OVERHEAD DOOR CORPORATION.

REF DWG	USED ON

THIRD ANGLE PROJECTION

ASME Y14.100 AND Y14.5 APPLY, UNLESS OTHERWISE SPECIFIED DIMENSIONS ARE IN U.S. CUSTOMARY UNITS.

TOLERANCES UNLESS OTHERWISE SPECIFIED

HOLE DIAMETER
UNDER .251 +.004/−.003
.251 TO .500 +.006/−.003
OVER .500 +.008/−.003

FRACTIONS
± 1/16

WHOLE NUMBERS: ± .25
.X ± .1
.XX ± .03
.XXX ± .010
ANGLES: ± .5°

FINISH 5

UNIT OF MEASURE N/A

The Genuine. The Original. LEWISVILLE, TEXAS

MATERIAL: 4

	NAME	DATE
DRAWN BY:	K WILSON	8/8/03
CHECKED BY:	L KRUPKE	9/5/03
APPROVED BY:	JD FAW	9/5/03

DRAWING TITLE: SERIES 610, ROLLING SERVICE DOOR 10' DADE COUNTY

DRAWING NUMBER D− 308123

SCALE: NONE SHEET 1 OF 2

NOTES

1. REFER TO DRAWING 308666.0001 FOR TAG DETAILS
2. FASTENER FOR TAG IS P/N 080276-1004(STEEL DRIVE SCREW). TAG WILL BE MOUNTED IN THE MIDDLE OF THE BOTTOM BAR.

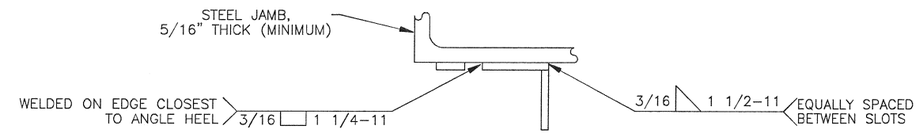

TOP VIEW

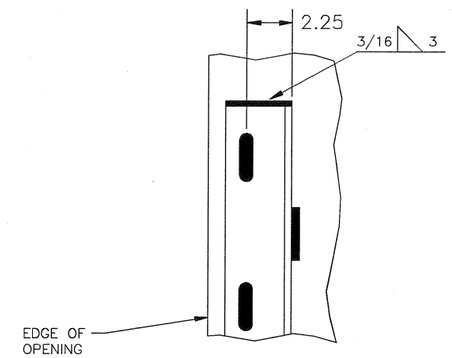

FRONT VIEW OF WALL ANGLE

DETAILS FOR WELDING "E" GUIDES TO STEEL JAMBS

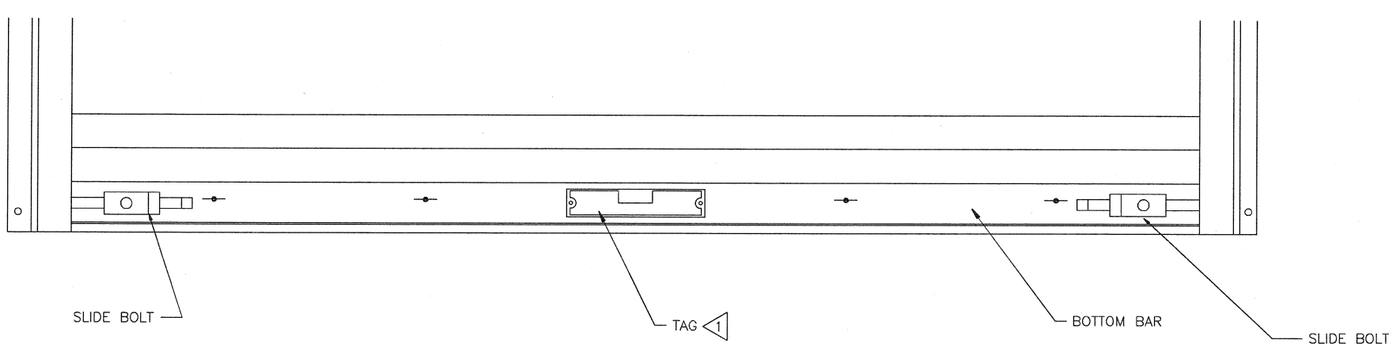

DETAIL "E" 2

SCALE: 4/1

STATE OF TEXAS
MARK A SAWICKI
106291
LICENSED
PROFESSIONAL ENGINEER
11/06/13

OVERHEAD DOOR CORPORATION
2501 SOUTH STATE HWY 121 BUSINESS
LEWISVILLE, TX 75067

MARK A. SAWICKI, P.E. #72613

THE DRAWINGS AND ALL OTHER INFORMATION CONTAINED HEREIN ARE THE CONFIDENTIAL AND PROPRIETARY PROPERTY OF OVERHEAD DOOR CORPORATION AND ITS AFFILIATED COMPANIES. THIS DRAWING AND INFORMATION, IN WHOLE OR IN PART, MAY NOT BE COPIED IN ANY MANNER OR DISCLOSED TO ANYONE WITHOUT THE PRIOR WRITTEN CONSENT OF OVERHEAD DOOR CORPORATION. NO DISCLOSURE OF ANY OF THIS DRAWING OR INFORMATION IS INTENDED TO OPERATE AS A LICENSE OR AUTHORIZATION TO USE IT FOR ANY PURPOSE WITHOUT THE SPECIFIC WRITTEN CONSENT OF OVERHEAD DOOR CORPORATION.

REF DWG	USED ON

THIRD ANGLE PROJECTION

ASME Y14.100 AND Y14.5 APPLY, UNLESS OTHERWISE SPECIFIED DIMENSIONS ARE IN U.S. CUSTOMARY UNITS.

TOLERANCES UNLESS OTHERWISE SPECIFIED

HOLE DIAMETER	WHOLE NUMBERS:	± .25
UNDER .251 +.004/-.003	.X	± .1
.251 TO .500 +.006/-.003	.XX	± .03
OVER .500 +.008/-.003	.XXX	± .010
FRACTIONS	ANGLES:	± .5°
± 1/16		

FINISH: N/A

UNIT OF MEASURE: N/A

The Genuine. The Original. OVERHEAD DOOR CORPORATION LEWISVILLE, TEXAS

MATERIAL: N/A

	NAME	DATE
DRAWN BY:	M WOMACK	10/10/03
CHECKED BY:	JD FAW	10/10/03
APPROVED BY:	L KRUPKE	10/10/03

DRAWING TITLE: SERIES 610, ROLLING SERVICE DOOR 10' DADE COUNTY

DRAWING NUMBER D- 308123

SCALE: NONE SHEET 2 OF 2