**NOTES**

1. RATED DESIGN LOAD ±65 PSF.
2. SECTION HEIGHTS MAY VARY TO CREATE VARIOUS DOOR HEIGHTS, 24" MAXIMUM SECTION HEIGHT.
3. TESTED IN ACCORDANCE WITH DADE COUNTY PROTOCOLS TAS 201–94, TAS 202–94, & TAS 203–94.
4. ASTM A–653, PER OVERHEAD DOOR DWG 605755.
5. PER ASTM A–570, 40,0000 PSI MIN. YIELD.
6. JAMB LOAD CALCULATIONS:
   (1/2 DOOR WIDTH)(1 FT OF HEIGHT)(DESIGN LOAD)
   (6 FEET)(1 FOOT)(65 LB/SF)=390lb/FT OF HEIGHT)
7. JAMB FASTENER REQUIREMENTS:
   $F_x$ =(1/2 DOOR WIDTH)(1 FT)(DESIGN LOAD)
   $F_x$ =(6 FT)(1 FT)(65 PSF)=390 lb.
8. DOOR SKIN MATERIAL SHALL BE GALVANIZED ACCORDING TO ASTM A–525 TO G40 MINIMUM.
9. PER ASTM A–653 AND SS GRADE 40,000 PSI MIN. YIELD PER ASTM A–653.
10. APPROVED NON–INSULATED SERIES: 424, 416, 420.
11. APPROVED INSULATED SERIES: 426, 418, 422.
12. WELD SLOT ON ANGLE AND 3/32" FILLET WELD ON ANGLE HEEL 2" LONG ON 12" CENTERS.
13. LIFT–UP MECHANISM NOT PART OF THIS APPROVAL BUT SHALL BE CERTIFIED BY AN INDEPENDENT TESTING AGENCY.
14. BOTTOM BAR SHALL BE LINED UP FLUSH WITH END OF SECTION. ONE SCREW SPACED 1" FROM EACH END OF DOOR SECTION AND AT EACH PRE–PUNCHED HOLE.

| REVISIONS | | | |
|---|---|---|---|
| LETTER | DESCRIPTION | DATE | APPROVAL |
| E | REV PER EN 12217 | 8/23/07 | MS |
| F | REV PER ER 500064 | 3/25/09 | SFT |
| G | REV PER ER 501045 | 8/12/11 | SFT |

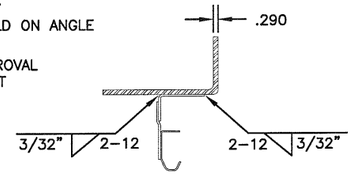


SECTION "B–B"
ANGLE–IN MOUNT 2 4
TYP. STEEL JAMBS
VERTICAL TRACK

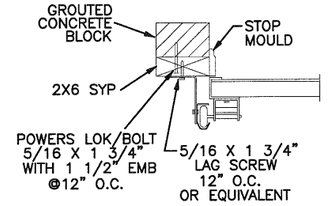


SECTION "B–B"
JAMB BRACKET MOUNT 4
TYP. WOOD JAMBS

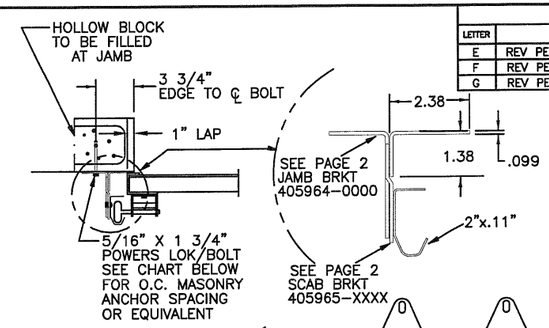


SECTION "B–B" 4
ANGLE AND BRACKET MOUNT
TYP. MASONRY JAMBS

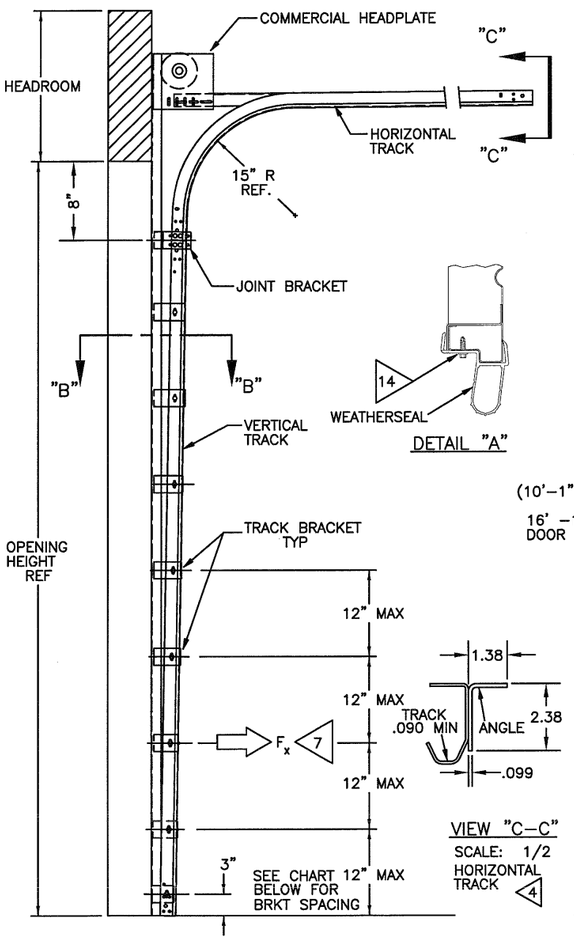


SIDE ELEVATION OF TYPICAL COMMERCIAL TRACK

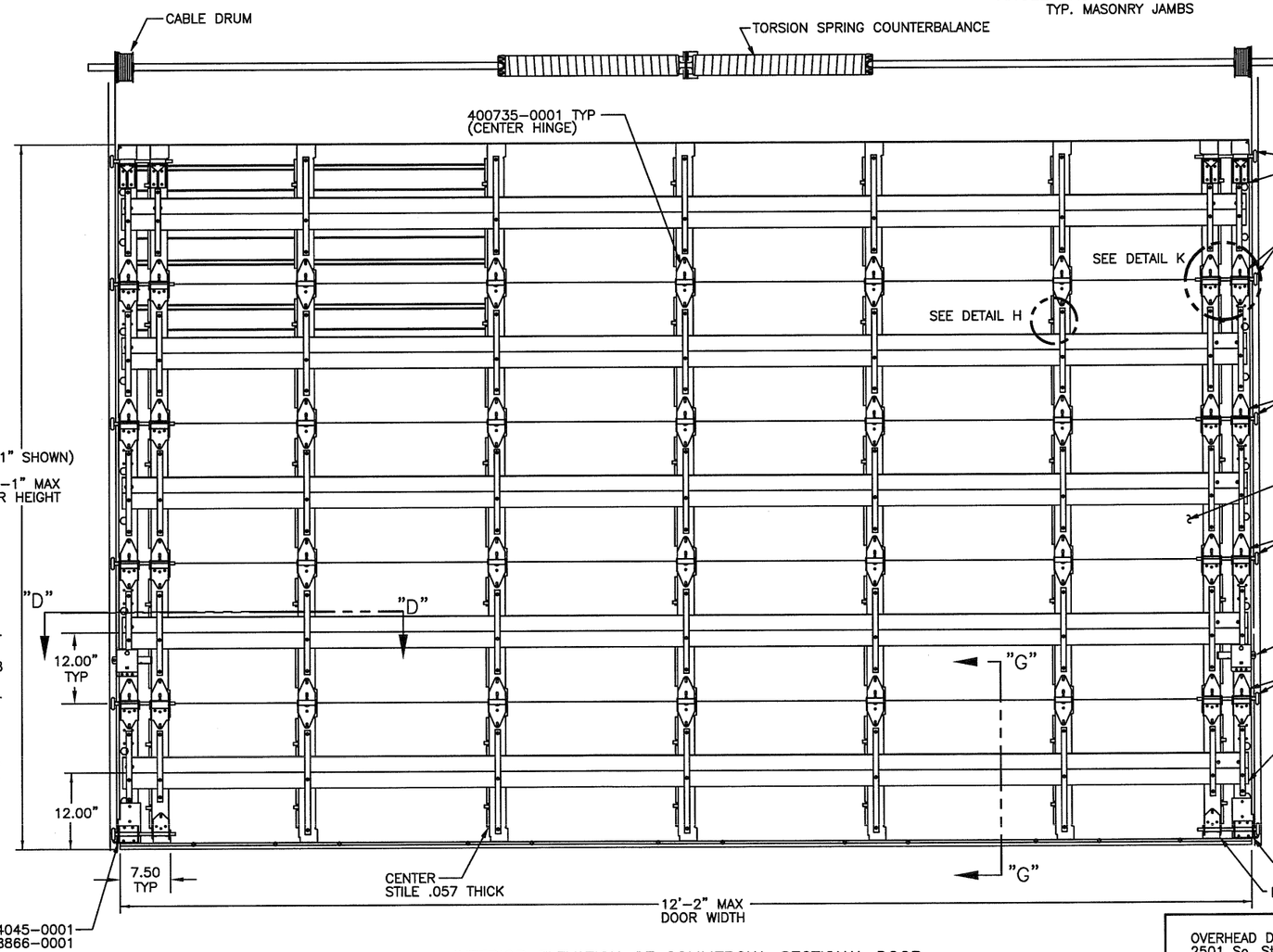


INTERIOR ELEVATION OF COMMERCIAL SECTIONAL DOOR

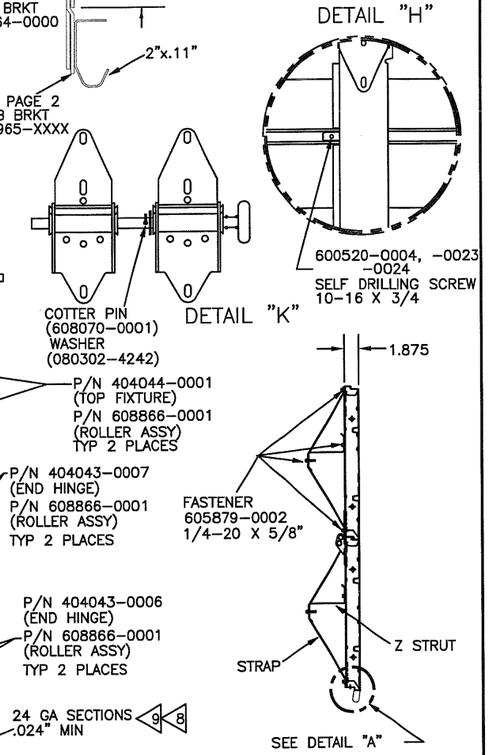


SIDE ELEVATION OF COMMERCIAL SECTIONAL DOOR

| SERIES 424 – 65 PSF WINDLOAD | | | | | | | | | |
|---|---|---|---|---|---|---|---|---|---|
| DOOR WIDTH | CENTER STILE | END STILE | STRUTS/SECT. | ROLLER | MAX. BRACKET SPACING | VERTICAL TRACK GAGE | JAMB LOAD (# PER FT–HT) | HARDWARE | POWER LOK/BOLT MAX MASONRY ANCHOR SPACING |
| 8'2" & LESS | 3 | DOUBLE | Z STRUTS | 2" X 5/8" | 12" | .090" | 260 | HEAVY DUTY | 5/16x1–1/2(EMB) @12" O.C. |
| 8'3"–10'2" | 4 | DOUBLE | Z STRUTS | 2" X 5/8" | 12" | .090" | 325 | HEAVY DUTY | 5/16x1–1/2(EMB) @12" O.C. |
| 10'3–12'2" | 5 | DOUBLE | Z STRUTS | 2" X 5/8" | 11" | .090" | 390 | HEAVY DUTY | 5/16x1–1/2(EMB) @11" O.C. |


OVERHEAD DOOR CORPORATION
2501 So. State Hwy 121, Suite 200
Lewisville, TX 75067

MARK A. SAWICKI, FL P.E. #72613
TX P.E. #106291


3/23/12

MARK A. SAWICKI
108201
STATE OF TEXAS
PROFESSIONAL ENGINEER

UNLESS OTHERWISE SPECIFIED
DIMENSIONS ARE IN INCHES:TOLERANCES ON
DECIMAL DIMENSIONS: WHOLE NUMBERS ± .25; .X= ± .1; .XX= ± .03; .XXX= ± .010
HOLE DIAMETERS: UNDER .251+.004–.003; .251 TO .500+.006–.003; OVER .500+.008–.003
ANGLES ± 0° 30'
FRACTIONS ± 1/16"

OVERHEAD DOOR the original since 1921 DALLAS, TEXAS

| | NAME | DATE |
|---|---|---|
| DRAWN BY: | G FINERAN | 4/8/05 |
| CHECKED BY: | C BOHMANN | 4/14/05 |
| APPROVED BY: | L KRUPKE | 4/15/05 |

MATERIAL: N/A
APPLIED FINISH: NONE
UNIT OF MEASURE: EACH

DRAWING TITLE: WINDLOAD
SERIES COMMERCIAL SECTIONAL STEEL DOOR, 65 PSF, DADE CO. 12'–2" MAX WIDTH

DRAWING NUMBER D- 410412
SCALE: 3/32 SHEET 1 OF 2

| REVISIONS | | | |
|---|---|---|---|
| LETTER | DESCRIPTION | DATE | APPROVAL |
| E | REV PER EN 12217 | 8/23/07 | MS |
| F | REV PER ER 500064 | 3/25/09 | SFT |
| G | REV PER ER 501045 | 8/12/11 | SFT |

**NOTES**

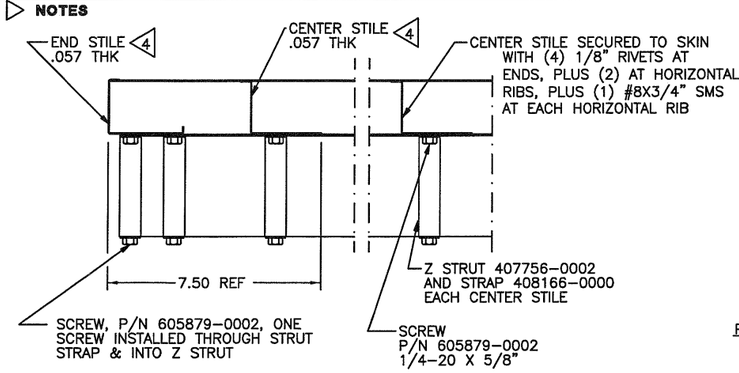


SECTION "D-D"

STEEL STRUTS (12' 2" WIDE)

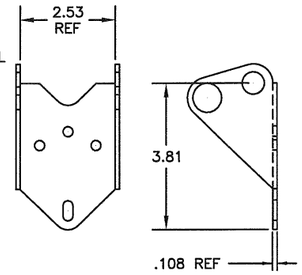


P/N 404028-0003 HINGE HALF, BOTTOM

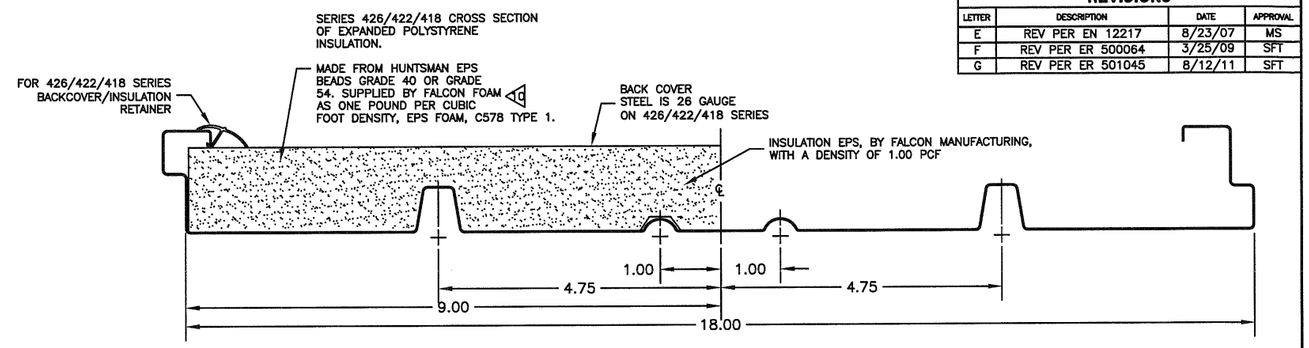


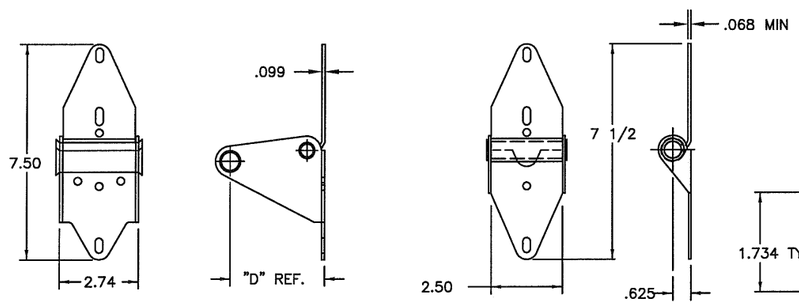


4 P/N 404043-XXXX
(-0004 THRU -0010 SHOWN)

| PART NUMBER | DIM."D" (REF) |
|---|---|
| 404043-0004 | 1.34 |
| 404043-0005 | 1.59 |
| 404043-0006 | 1.84 |
| 404043-0007 | 2.09 |
| 404043-0008 | 2.34 |
| 404043-0009 | 2.59 |
| 404043-0010 | 2.84 |

4 P/N 400735-0001, CENTER HINGE
STANDARD FOR 400 SERIES

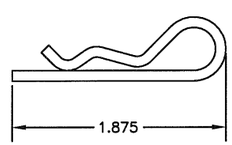


P/N 608070-0001 PIN, COTTER HAIRPIN, STEEL, ZINC PLATED




405964-0000 JAMB BRACKET

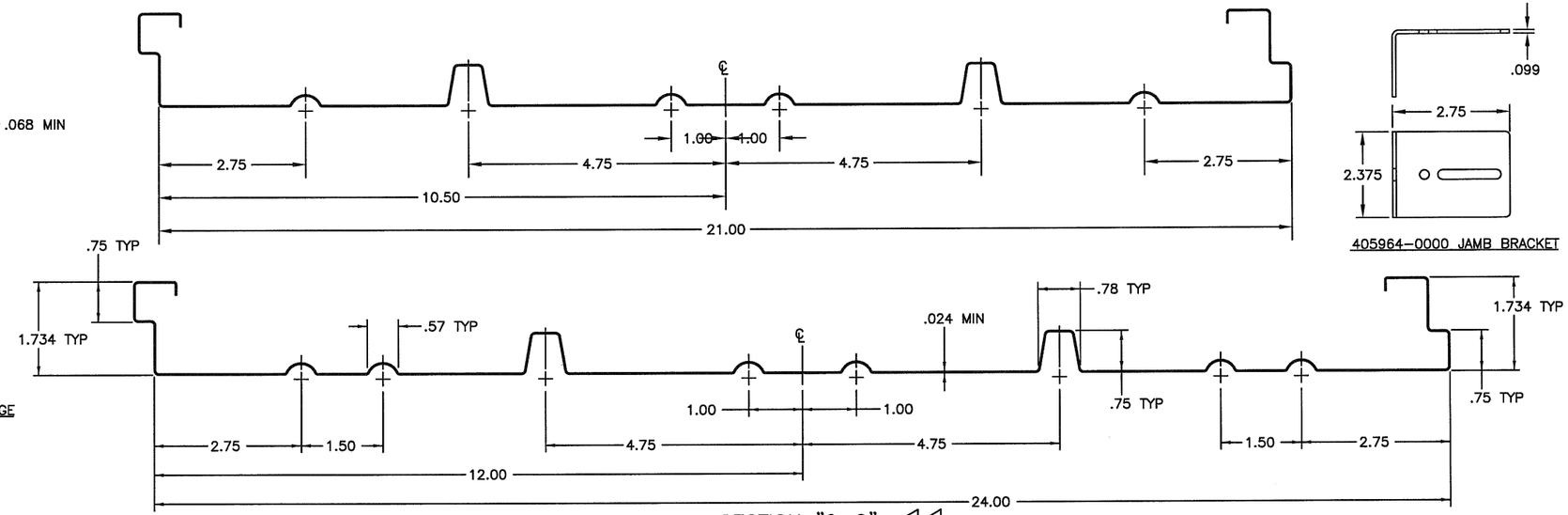


SECTION "G-G" 8 9

DOOR PANEL ONLY SHOWN FOR CLARITY ROTATED 90° CLOCKWISE

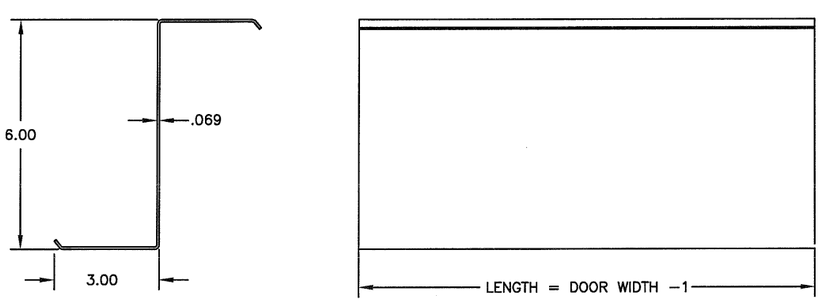


5 P/N 407756-0002 Z STRUT

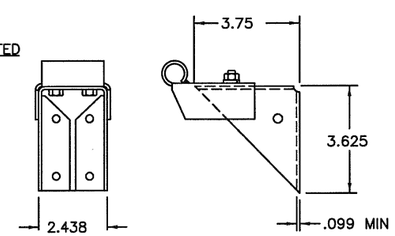


4 P/N 404044-0001, TOP FIXTURE
STANDARD

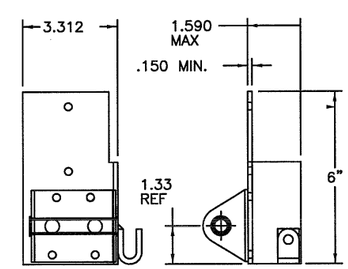


4 P/N 404045-0002, BOTTOM FIXTURE (RIGHT HAND SHOWN)
P/N 404045-0001, BOTTOM FIXTURE (LEFT HAND)

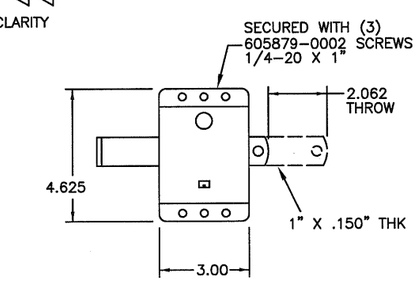


P/N 061601-0000, SLIDE LOCK ASSY

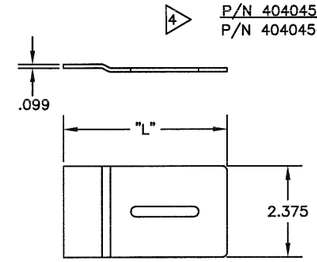


| PART NUMBER | DIMENSIONS "L" |
|---|---|
| 405965-0001 | 3.000 |
| 405965-0002 | 4.250 |
| 405965-0003 | 5.000 |
| 405965-0004 | 5.750 |
| 405965-0005 | 6.500 |
| 405965-0006 | 7.250 |

405965-XXXX SCAB BRACKET

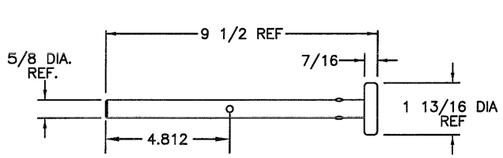


P/N 608866-0001, ROLLER ASSY, 2" TR-5 W/ 5/8" STEM

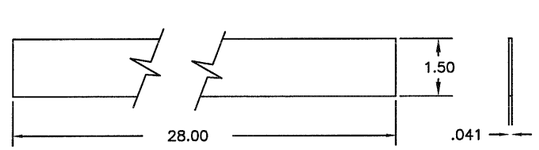


P/N 408166-0000 STRUT STRAP

3/23/12


OVERHEAD DOOR CORPORATION
2501 So. State Hwy 121, Suite 200
Lewisville, TX 75067

MARK A. SAWICKI, FL P.E. #72613
TX P.E. #106291


| UNLESS OTHERWISE SPECIFIED | | | | | | |
|---|---|---|---|---|---|---|
| DIMENSIONS ARE IN INCHES/TOLERANCES ON | | | OVERHEAD DOOR the original since 1921 DALLAS, TEXAS | NAME | DATE | DRAWING TITLE: WINDLOAD COMMERCIAL SECTIONAL STEEL DOOR, 65 PSF, DADE CO. 12'-2" MAX WIDTH |
| DECIMAL DIMENSIONS WHOLE NUMBERS: ± .25 | HOLE DIAMETERS | ANGLES ± 0° 30' | | DRAWN BY: G FINERAN | 4/8/05 | |
| X= ± .1 | UNDER .251+.004-.003 | FRACTIONS ± 1/16" | MATERIAL: N/A | CHECKED BY: C BOHMANN | 4/14/05 | DRAWING NUMBER D- 410412 |
| XX= ± .03 | .251 TO .500+.005-.003 | | | | | |
| XXX= ± .010 | OVER .500+.005-.003 | | APPLIED FINISH: NONE / UNIT OF MEASURE: EACH | APPROVED BY: L KRUPKE | 4/15/05 | SCALE: FULL / SHEET 2 OF 2 |