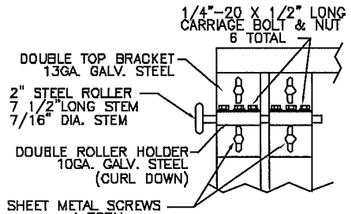

DETAIL F (ALTERNATE)

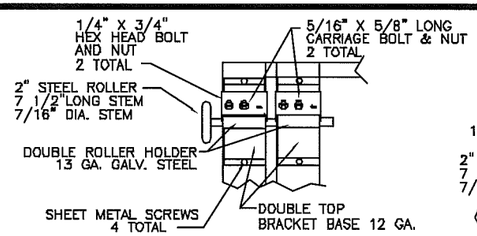

DETAIL F

LEFT SIDE SHOWN
RIGHT SIDE OPPOSITE

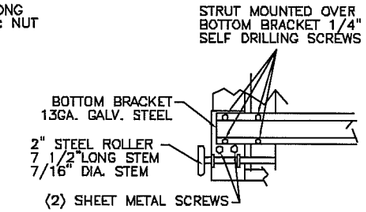

DETAIL C

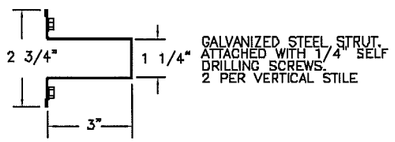

DETAIL D

3" 18GA. (0.044") WIDE STRUT

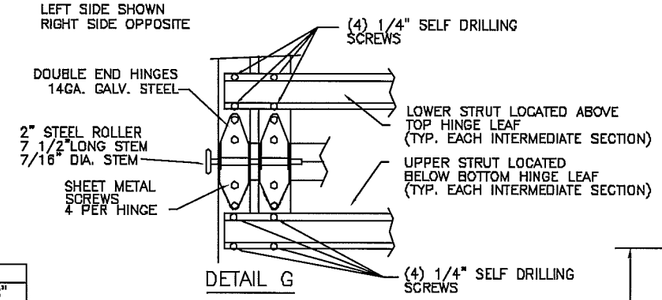

DETAIL G

STRUTTING SCHEDULE		
BOTTOM SECTION:	2 STRUTS	(1) Over Bottom Bracket "DETAIL C" (1) Below Hinge "DETAIL G"
INTERM. SECTION:	2 STRUTS	(1) Above Hinge "DETAIL G" (1) Below Hinge "DETAIL G"
TOP SECTION:	2 STRUTS	(1) Above Hinge "DETAIL G" (1) Below Top Roller Carrier

NOTE: UNLESS SPECIFIED OTHERWISE, ALL FASTENERS ARE 1/4"-14 X 3/4" HEX HEAD SHEET METAL SCREWS OR 1/4" X 3/4" HEX HEAD SELF DRILLING SCREWS.

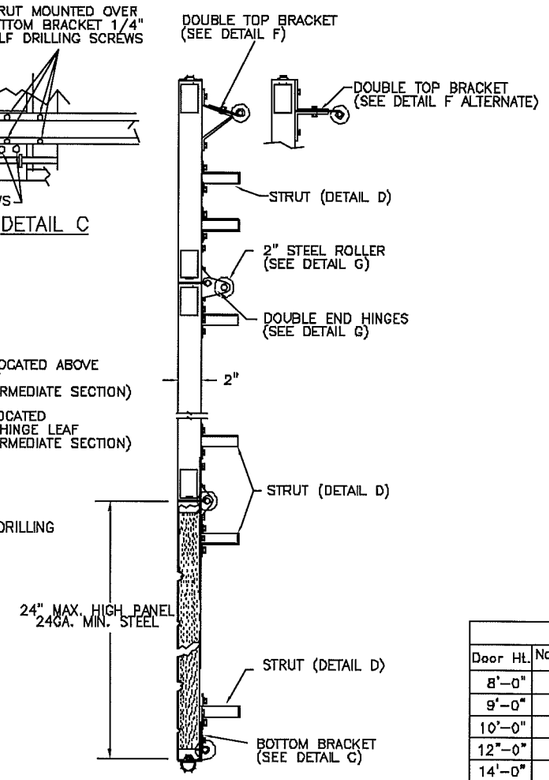

SECTION A-A

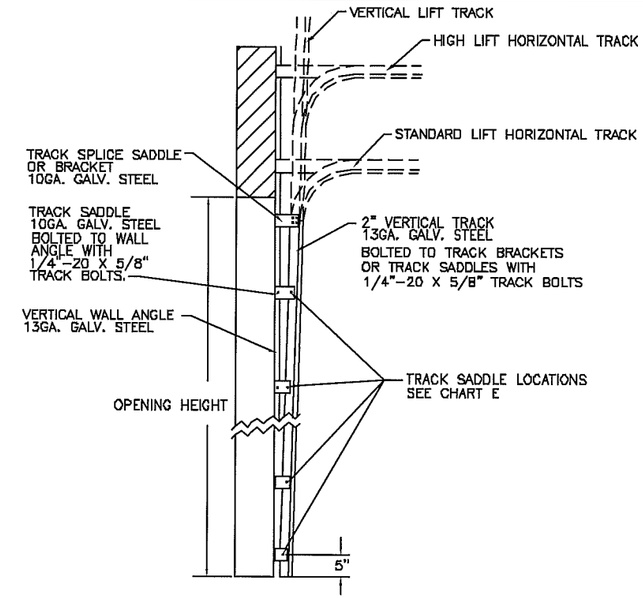

CHART E		
Door Ht.	No. of Track Saddles	TRACK SADDLE LOCATIONS
8'-0"	8	5",17",29",41",53",65",77"
9'-0"	9	5",17",29",41",53",65",77",89"
10'-0"	10	5",17",29",41",53",65",77",89",101"
12"-0"	12	5",17",29",41",53",65",77",89",101",113",125"
14'-0"	14	5",17",29",41",53",65",77",89",101",113",125",137",149"
16'-0"	16	5",17",29",41",53",65",77",89",101",113",125",137",149",161",173"

NOTE: Anchor bolts are located 3/4" above centerline of track saddle. One anchor bolt per track saddle

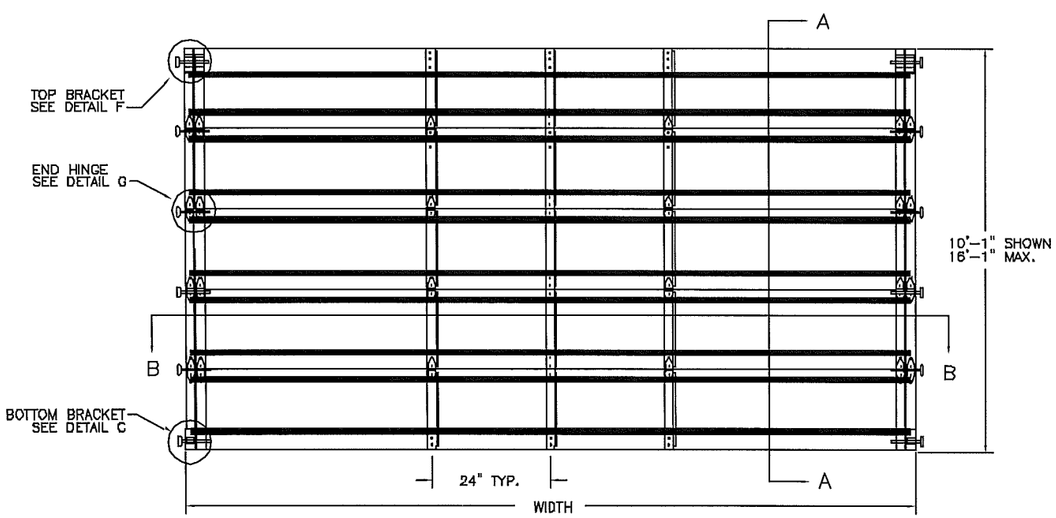

DOOR SIZE		NO. OF	STILE	P.S.F. TABLE DESIGN PRESSURE	
WIDTH	HEIGHT	CEN. STILES	SPACING	POSITIVE	NEGATIVE
12'-2"	16'-1"	3	24"	+38.3	-43.0

PRESSURES TABULATED ARE BASED ON TESTS OF MODEL 240 (24ga. Panel) MODEL 200 (20ga. Panel) WILL WITHSTAND EQUAL OR HIGHER PRESSURES

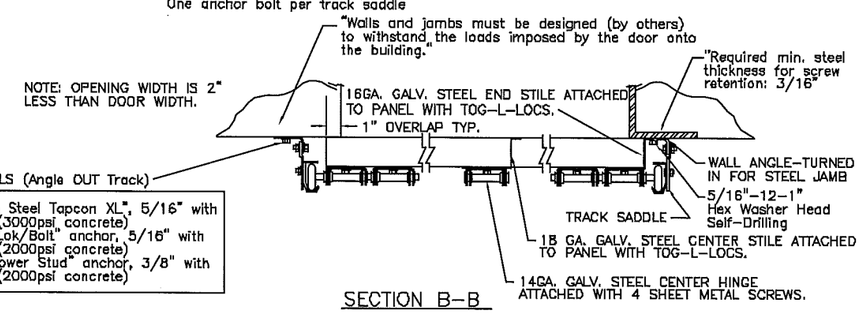

FOR CONCRETE WALLS (Angle OUT Track)

ITW Buildex "Carbon Steel Tapcon XL", 5/16" with 1.75" embed min. (3000psi concrete)
Powers Fasteners "Lok/Bolt" anchor, 5/16" with 1.75" embed min. (2000psi concrete)
Power Fasteners "Power Stud" anchor, 3/8" with 1.63" embed min. (2000psi concrete)

SECTION B-B

REV.	DATE	CHANGE
C	12/15/11	NEW LOGO/ENG. STAMP
B	08/20/09	
A	07/09/09	

STATE OF TEXAS
JOHN E. SCATES
56308
REGISTERED
PROFESSIONAL ENGINEER

John E Scates
10/19/12

John E Scates PE
3121 FAIRGATE DR.
Carrollton, TX 75007
TX-PE 56308-F-2203
FL-PE-51737
(972) 492-9500

Professional Engineer's seal provided only for verification of windload construction details.

WINDSOR DOOR
5800 SCOTT HAMILTON DR.
LITTLE ROCK, AR 72209
(501) 562-1872

MODELS: MODEL 240(24GA.)/200(20GA.) DOUBLE STRUTS

PART NAME: 12'-2" x 16'-1"
DESIGN LOAD +38.3 -43.0

TOLERANCE: FRAC. ± 1/64" DEC. ± .015 ANG. ± 1°

NEXT LEVEL

DATE: 08-20-09

DWG. NO. 99-B-093-A REV. C

SCALE NONE

PLOT SCALE

DRN. BY BNB

SHT 1 OF 1