NOTES:

1. GLAZING OPTION – .125" MINIMUM DSB GLAZING IN MOLDED FRAMES SCREWED TOGETHER IN TOP SECTION ONLY (WITH OR WITHOUT DECORATIVE INSERTS) MEETS UNIFORM STATIC DESIGN PRESSURES SHOWN ON THIS DRAWING. FOR THE VERTICAL RAISED PANEL GLAZING SHALL HAVE A DAYLIGHT OPENING OF 11.375" X 16.25" AND A MINIMUM OF (8) #8x1" SCREWS (2X ALONG THE HORIZONTAL AND 2X ALONG THE VERTICAL) AND FOR THE HORIZONTAL RAISED PANEL GLAZING SHALL HAVE A DAYLIGHT OPENING OF 24.375" X 6.5" AND A MINIMUM OF (8) #8x1" SCREWS (3X ALONG THE HORIZONTAL AND 1X ALONG THE VERTICAL). GLAZING IS NOT IMPACT RESISTANT AND DOES NOT MEET THE REQUIREMENTS FOR WIND-BORNE DEBRIS REGION.

2. VINYL OR WOOD DOOR STOP NAILED A MAXIMUM OF 6" O.C. MUST OVERLAP TOP AND BOTH ENDS OF PANELS MINIMUM 7/16" TO MEET NEGATIVE PRESSURES.

3. SLIDE LOCK OR OPERATOR REQUIRED.

4. SECTION SHALL BE CONSTRUCTED WITH FOAMED IN PLACE POLYURETHANE FOAM INSULATION CHEMICALLY BONDED TO A MINIMUM .070" FIBERGLASS FACER AND 27 GA STEEL BACKER.

5. THE DESIGN OF THE SUPPORTING STRUCTURAL ELEMENTS SHALL BE THE RESPONSIBILITY OF THE PROFESSIONAL OF RECORD FOR THE BUILDING OR STRUCTURE AND IN ACCORDANCE WITH CURRENT BUILDING CODES FOR THE LOADS LISTED ON THIS DRAWING.

6. DOOR JAMB TO BE MINIMUM 2x4 STRUCTURAL GRADE LUMBER. REFER TO JAMB CONNECTION SUPPLEMENT FOR ATTACHMENT TO SUPPORTING STRUCTURE.

7. SECTION SHALL HAVE A 5" 25 GA STEEL BACKUP PLATE ACROSS THE TOP OF EACH SECTION.

8. FOR LOW HEAD ROOM LIFT CONDITIONS, TOP BRACKET SHALL BE A 13 GA LHR 7/4 TOP BRACKET WITH A MINIMUM OF (3) 1/4–14x7/8" SELF DRILLING CRIMPTITE SCREWS IN LIEU OF THE BRACKET SHOWN ON THIS DRAWING. U–BAR ON TOP SECTION SHALL BE INSTALLED ON TOP OF LHR TOP BRACKETS.

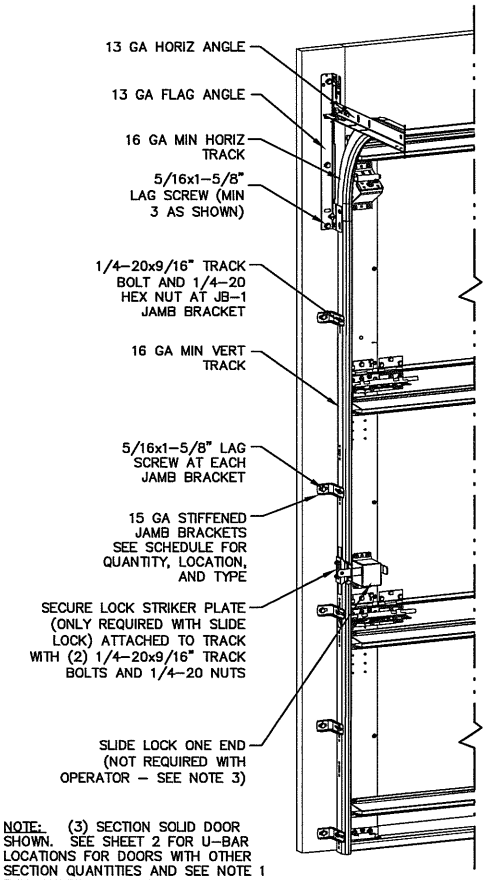

NOTE: (3) SECTION SOLID DOOR SHOWN. SEE SHEET 2 FOR U–BAR LOCATIONS FOR DOORS WITH OTHER SECTION QUANTITIES AND SEE NOTE 1 THIS SHEET FOR GLAZING OPTION.

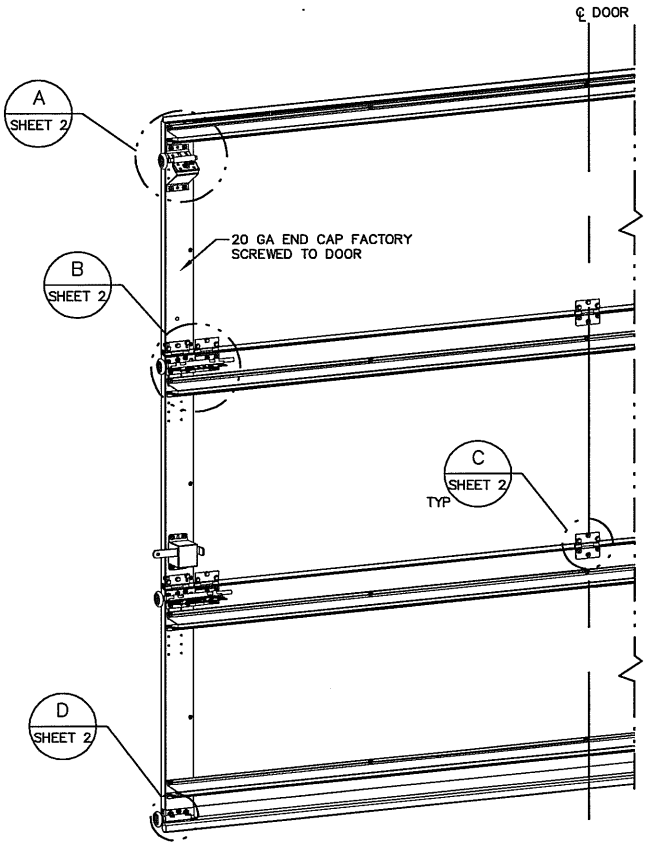

REVISIONS

P CORRECTED BACKER PLATE GAGE IN NOTES. GRT 4/10/07

P1 CHANGED BACKER STEEL FROM 30 GA TO 27 GA GRT 3/31/08

P2 ADDED LHR OPTION. UPDATED TITLE BLOCK. UPDATED PER TESTING GRT 8/14/13

P3 UPDATED PER TESTING GRT 12/11/13

P4 UPDATED PER TESTING GRT 5/14/14

SUPERIMPOSED DESIGN PRESSURE LOADS ON SUPPORTING STRUCTURE

MAX DOOR WIDTH	DOOR HEIGHT	UNIFORM LOAD EACH JAMB (PLF)
8'–0"	ALL	+91.6/–105.2
9'–0"	ALL	+103.1/–118.4

JAMB BRACKET SCHEDULE

DOOR HEIGHT	NO. OF SECTIONS	NO. OF JAMB BRACKETS (EACH JAMB)	LOCATION OF CENTERLINE OF JAMB BRACKETS MEASURED FROM BOTTOM OF TRACK (ALL DIMENSIONS ± 2")
7'–0"	3	5	2" (JB), 14" (JB), 29–1/2" (JB), 44" (JB), 63–1/4" (JB)
8'–0"	4	6	2" (JB), 14" (JB), 23" (JB), 34" (JB), 46" (JB), 66–1/2" (JB)
> 8'–0"			SEE NOTE BELOW

NOTE:
(JB–1) FOLLOWING DIMENSION DENOTES SLOTTED JAMB BRACKET ATTACHED TO TRACK WITH 1/4–20x9/16" TRACK BOLT AND NUT.

(QI) FOLLOWING DIMENSION DENOTES QUICK INSTALL JAMB BRACKET INSTALLED IN BUTTERFLY SLOT. NO ADDITIONAL HARDWARE NEEDED TO ATTACH TO TRACK.

ALL DOORS GREATER THAN 8' IN HEIGHT REQUIRE USE OF CONTINUOUS WALL ANGLE. SEE SUPPLEMENT TRACK CHART FOR DETAILS.

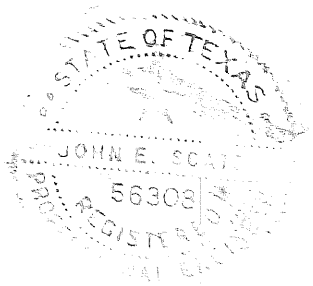

John E Scates 9/4/14

JOHN E. SCATES, PE
3121 FAIRGATE DR.
CARROLLTON, TX 75007
FL PE 51737 TX PE 56308/F2203

PROFESSIONAL ENGINEER'S SEAL PROVIDED ONLY FOR VERIFICATION OF WINDLOAD CONSTRUCTION DETAILS.

Wayne® Dalton

A DIVISION OF OVERHEAD DOOR CORP
3395 ADDISON DRIVE
PENSACOLA, FLORIDA 32514
(850) 474–9890

STATIC PRESSURE RATINGS		APPROVED SIZES		SCALE: N.T.S.		SIZE: A
DESIGN (PSF):	+22.90/–26.30	MAX WIDTH:	9'–0"		DATE	NAME
TEST (PSF):	+34.35/–39.45	MAX HEIGHT:	10'–0"	DRAWN	7/12/06	GRT
IMPACT/CYCLIC RATED (YES/NO):	NO	MAX SECTION HEIGHT:	28"	CHECKED	4/11/07	MRB

MODEL 9800

SHEET 1 OF 2

WINDLOAD SPECIFICATION OPTION CODE 1200

DRAWING PART NO. 327931

REV. P4

13 GA ROLLER SLIDE ATTACHED TO BRACKET WITH 5/16–18 BOLT & NUT IN CENTER SLOT AND 1/4–20x9/16" TRACK BOLT & 1/4–20 HEX NUT THROUGH ANY TWO ALIGNING HOLES

2" STEEL ROLLER WITH 4" STEM

13 GA COMMERCIAL 'A' FRAME TOP BRACKET ATTACHED WITH (4) 1/4–14x7/8" SELF DRILLING CRIMPTITE SCREWS

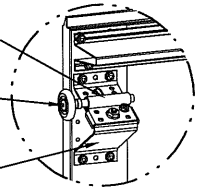

DETAIL A

(2) 15 GA HINGE LEAFS ATTACHED WITH (3) 1/4–14x5/8" CRIMPTITE SCREWS EACH

14 GA HINGE BASE FACTORY ATTACHED TO DOOR WITH (5) 1/4–14x1/2" SELF DRILLING CRIMPTITE SCREWS

2" STEEL ROLLER WITH 9" 1144 GRADE OR EQUIVALENT STEM

13 GA ROLLER SLIDE FACTORY RIVETED TO HINGE BASE

13 GA REINFORCING BRACKET ATTACHED TO HINGE BASE WITH (2) 1/4–20x5/8" CARRIAGE BOLTS & 1/4–20 HEX NUTS AND ATTACHED TO DOOR WITH (2) 1/4–14x7/8" SELF DRILLING CRIMPTITE SCREWS

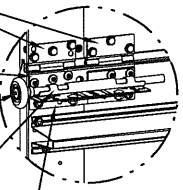

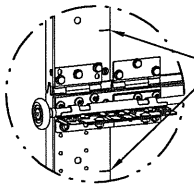

U–BAR ALIGNMENT LINES ON END CAPS

DETAIL B

15 GA HINGE ATTACHED WITH (3) FIELD ATTACHED 1/4–14x5/8" CRIMPTITE SCREWS AND (3) FACTORY ATTACHED 1/4–14x1/2" SELF DRILLING CRIMPTITE SCREWS

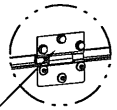

DETAIL C

12 GA BOTTOM BRACKET FACTORY ATTACHED WITH (2) 1/4–14x1/2" SELF DRILLING CRIMPTITE SCREWS AND (1) 1/4–14x5/8" TAMPER RESISTANT SCREW

2" STEEL ROLLER WITH 4" STEM

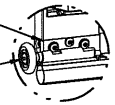

DETAIL D

U–BAR LOCATIONS

(5) SECTION DOORS WITH (6) 3" 20 GA 80 KSI U–BARS LOCATED AS SHOWN

(4) SECTION DOORS WITH (5) 3" 20 GA 80 KSI U–BARS LOCATED AS SHOWN

(3) SECTION DOORS WITH (4) 3" 20 GA 80 KSI U–BARS LOCATED AS SHOWN

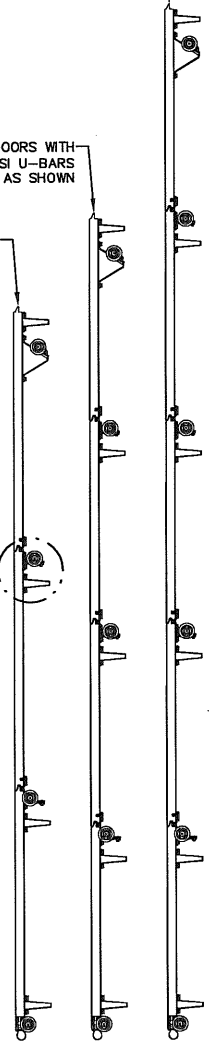

ALL U–BARS SHALL BE ATTACHED WITH (1) FASTENER AT EACH HOLE LOCATION (MINIMUM OF (10) FASTENERS EACH U–BAR). ALL FASTENERS USED TO ATTACH U–BARS SHALL BE 1/4–14x1/2" SELF DRILLING CRIMPTITE SCREWS EXCEPT AT ENDS WHICH SHALL BE 1/4–14x7/8" SELF DRILLING CRIMPTITE SCREWS.

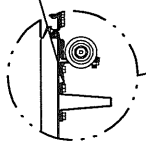

NOTE: U–BARS SHALL BE INSTALLED LEVEL ACROSS DOOR. THE U–BAR ON THE TOP OF EACH SECTION SHALL HAVE THE BOTTOM OF THE U–BAR ALIGNED WITH THE LINE ON THE TOP PART OF THE END CAP (EXCEPT THE TOP OF THE TOP SECTION). THE U–BAR ACROSS THE BOTTOM OF EACH SECTION SHALL HAVE THE BOTTOM OF THE U–BAR ALIGNED WITH THE LINE ON THE LOWER PART OF THE END CAP. SEE DETAIL B THIS SHEET.

REVISIONS

P CORRECTED BACKER PLATE GAGE IN NOTES. GRT 4/10/07

P1 CHANGED BACKER STEEL FROM 30 GA TO 27 GA GRT 3/31/08

P2 ADDED LHR OPTION. UPDATED TITLE BLOCK. UPDATED PER TESTING GRT 8/14/13

P3 UPDATED PER TESTING GRT 12/11/13

P4 UPDATED PER TESTING GRT 5/14/14

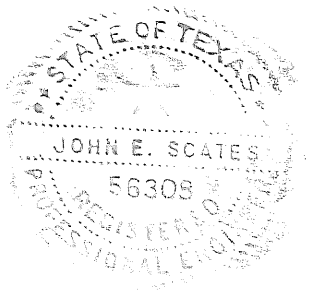

JOHN E. SCATES, PE
3121 FAIRGATE DR.
CARROLLTON, TX 75007
FL PE 51737 TX PE 56308/F2203

9/4/14

PROFESSIONAL ENGINEER'S SEAL PROVIDED ONLY FOR VERIFICATION OF WINDLOAD CONSTRUCTION DETAILS.

Wayne® Dalton

A DIVISION OF OVERHEAD DOOR CORP
3395 ADDISON DRIVE
PENSACOLA, FLORIDA 32514
(850) 474–9890

STATIC PRESSURE RATINGS		APPROVED SIZES		SCALE: N.T.S.		SIZE: A
DESIGN (PSF):	+22.90/–26.30	MAX WIDTH:	9'–0"		DATE	NAME
TEST (PSF):	+34.35/–39.45	MAX HEIGHT:	10'–0"	DRAWN	7/12/06	GRT
IMPACT/CYCLIC RATED (YES/NO):	NO	MAX SECTION HEIGHT:	28"	CHECKED	4/11/07	MRB

MODEL 9800

SHEET 2 OF 2

WINDLOAD SPECIFICATION OPTION CODE 1200

DRAWING PART NO. 327931

REV. P4