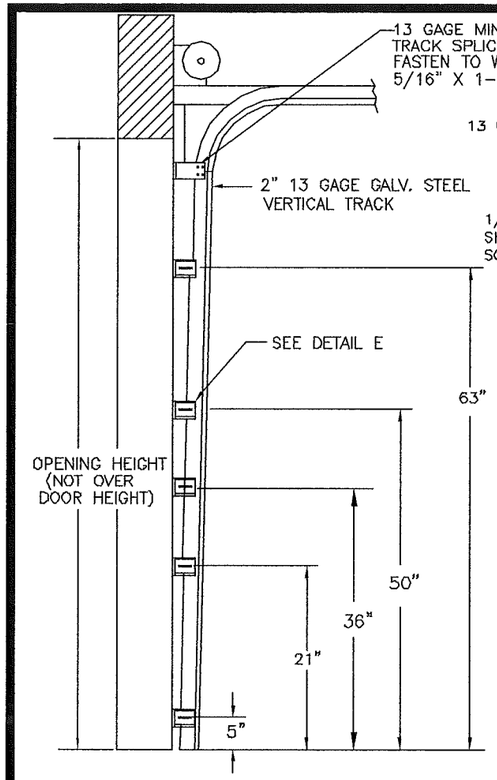

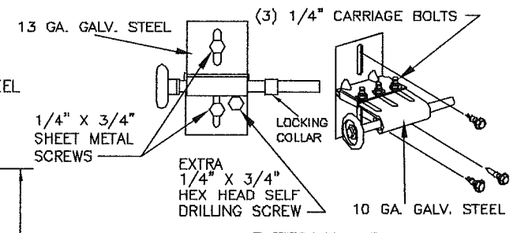

DETAIL D

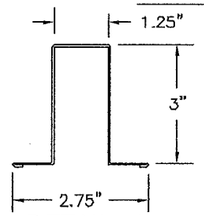

DETAIL A

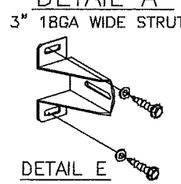

DETAIL E

TRACK JAMB BRACKET
5 BRACKETS PER SIDE

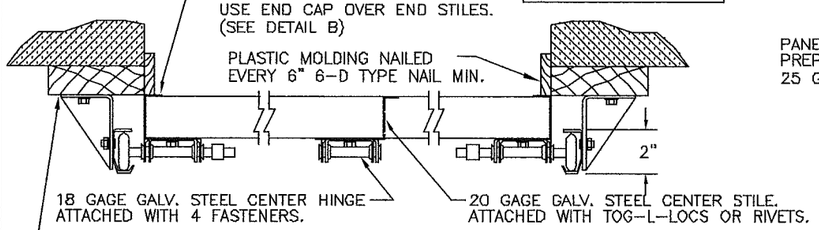

SECTION B-B

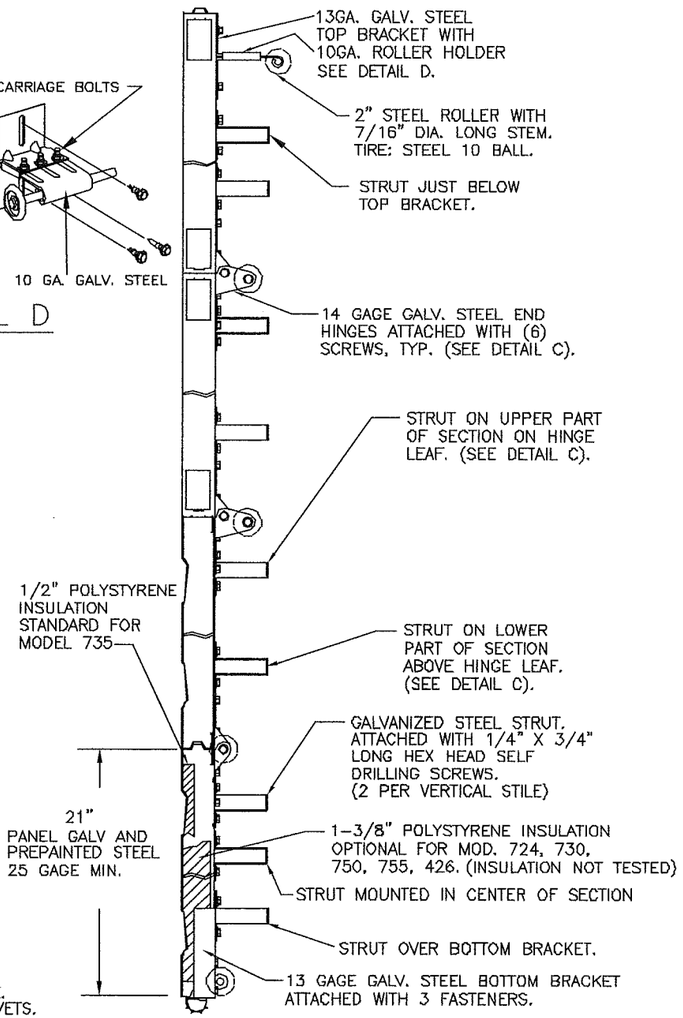

SECTION A-A

NOTE: ALL NON-DESCRIPTIVE FASTENERS SHOWN TO BE 1/4"-20 X 5/8" HEX BOLTS & NUTS OR 1/4" X 3/4" LONG HEX HEAD SHEET METAL SCREWS.

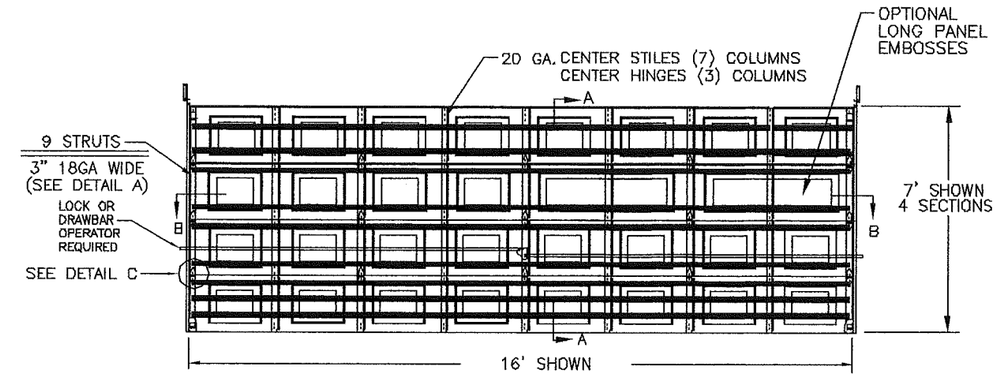

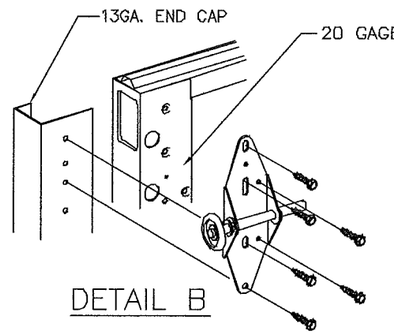

DETAIL B

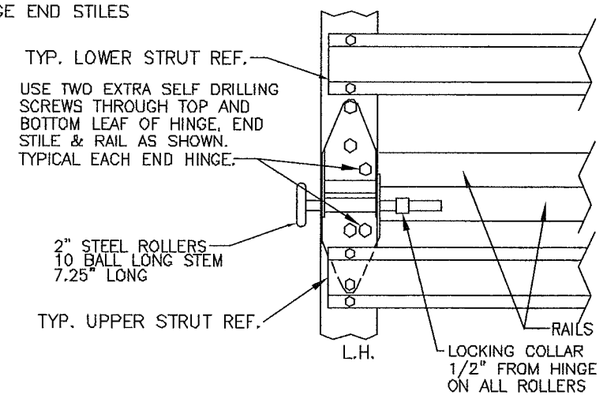

DETAIL C

FL 15080

	P.S.F. TABLE				
DOOR SIZE		DESIGN PRESSURE		TEST PRESSURE	
WIDTH	HEIGHT	POSITIVE	NEGATIVE	POSITIVE	NEGATIVE
20'-0"	UP TO 12'-3"	+25.5	-28.5		
18'-0"	UP TO 12'-3"	+31.5	-35.2		
16'-0"	UP TO 12'-3"	+39.9	-44.5	+59.9	-66.8
14'-0"	UP TO 12'-3"	+45.6	-50.9		
12'-0"	UP TO 12'-3"	+53.2	-59.3		

FOR DOORS OVER 4 SECTION TALL, ADD 2 STRUTS PER SECTION.

TESTED PER ANSI/DASMA 108-05 AND 108-02 (STATIC PRESSURE) AND COMPLIES WITH ASTM E-330 AS EQUIVALENT. DETERMINATION OF SUITABILITY FOR SPECIFIC SITES IS THE RESPONSIBILITY OF OTHERS.

John E Scates PE
3121 FAIRGATE DR.
Carrollton, TX 75007
TX-PE 56308-F-2203
FL-PE-51737
(972) 492-9500

Professional Engineer's seal provided only for verification of windload construction details.

REV.	DATE	CHANGE
B	1/28/13	REV. LOGO & ADDRESS
A	12/15/11	NEW LOGO/ENG. STAMP

WINDSOR DOOR

5800 SCOTT
HAMILTON DR.
LITTLE ROCK, AR
72209
(501) 562-1872

MODELS: 730 724 426 735 750 755

PART NAME: MODEL 730 "UP TO 20' WIDE" W5 C

TOLERANCE	NEXT LEVEL	DATE:	DWG. NO.
FRAC. ± 1/64" DEC. ± .015 ANG. ± 1°		12-03-09	99-B-095
SCALE NONE	PLOT SCALE	DRN. BY BNB	SHEET 1 OF 1