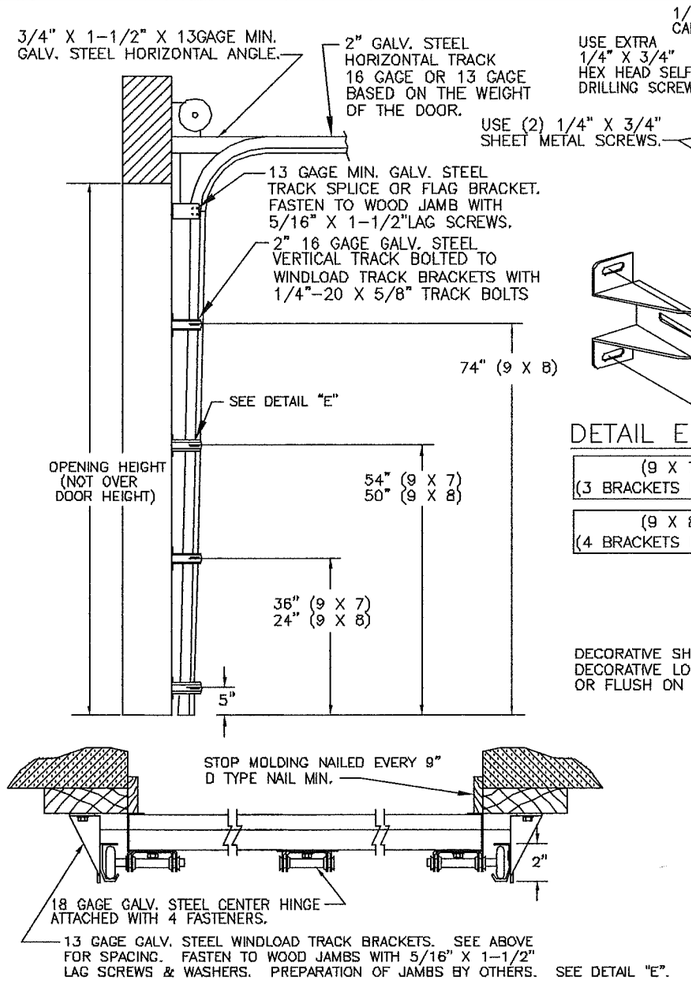

SECTION B-B

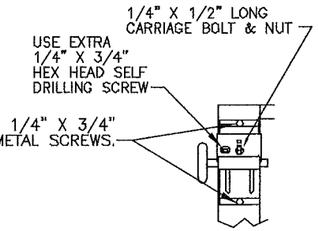

DETAIL D

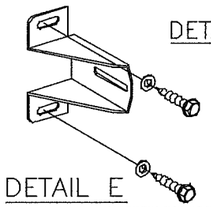

DETAIL E

(9 X 7) (3 BRACKETS EACH SIDE)
(9 X 8) (4 BRACKETS EACH SIDE)

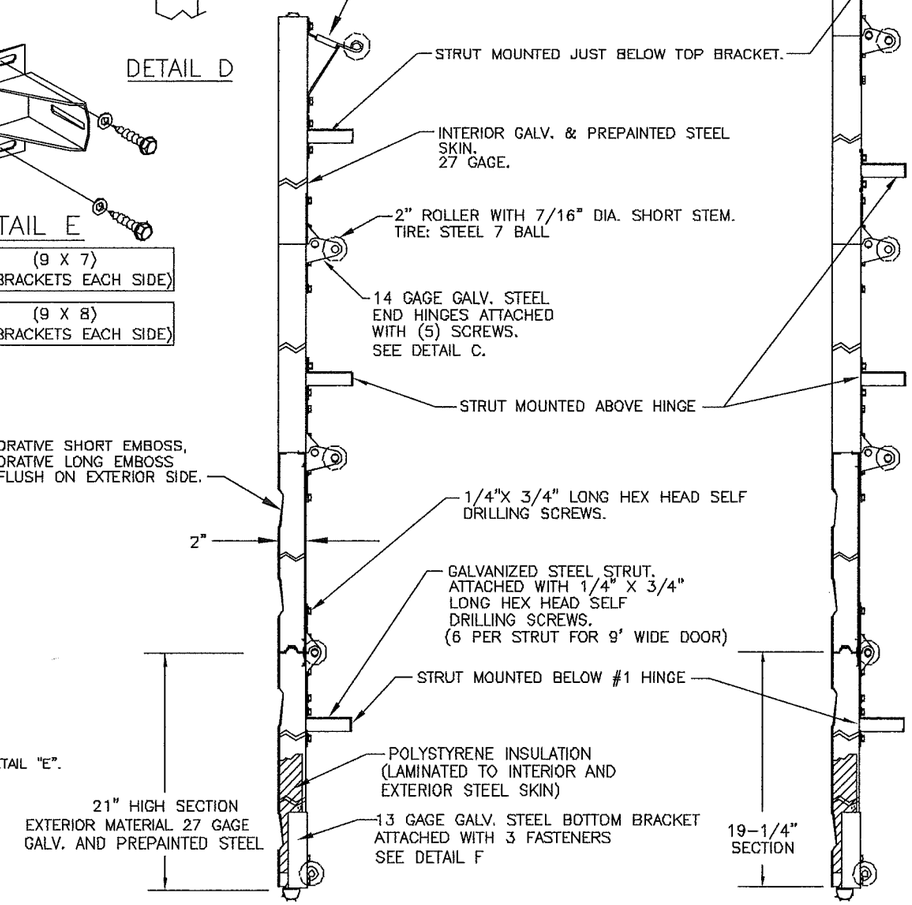

SECTION A-A

4 SECTION

SECTION C-C

5 SECTION

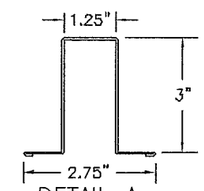

DETAIL A

3" 20GA WIDE STRUT

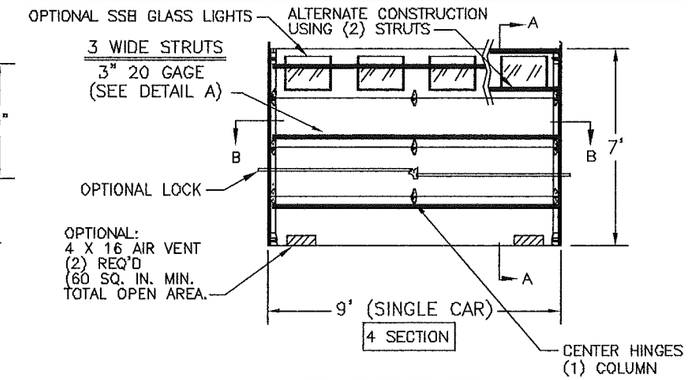

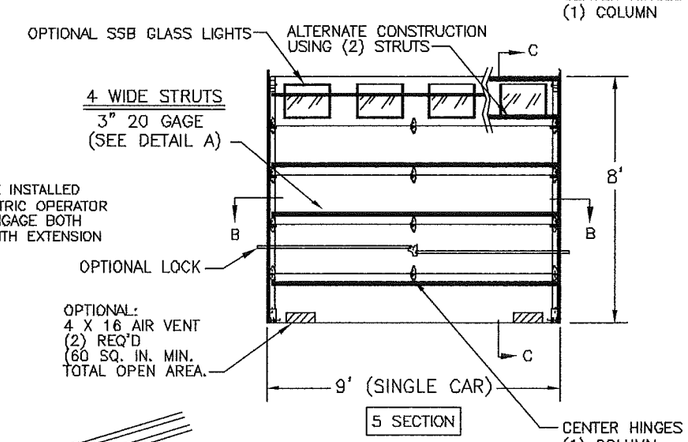

NOTE: DOOR MUST BE INSTALLED WITH EITHER AN ELECTRIC OPERATOR OR A LOCK (MUST ENGAGE BOTH TRACKS ON DOORS WITH EXTENSION SPRINGS).

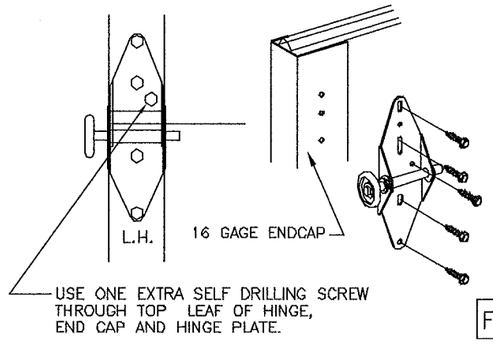

DETAIL C

NOTE: GLAZING DOES NOT SATISFY IMPACT DEBRIS REQUIREMENTS IN FBC

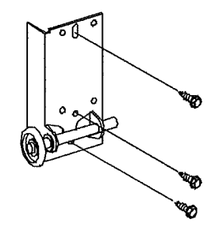

DETAIL "F"

NOTE: ALL NON-DESCRIPTIVE FASTENERS SHOWN TO BE 1/4"-20 X 5/8" HEX BOLTS & NUTS OR 1/4" X 3/4" LONG HEX HEAD SHEET METAL SCREWS.

FL 15078	DETAIL "F"
9' X 7'	9' X 8'

DOOR SIZE		P.S.F. TABLE			
		DESIGN PRESSURE		TEST PRESSURE	
WIDTH	HEIGHT	POSITIVE	NEGATIVE	POSITIVE	NEGATIVE
9'-0"	7'-0"	+31.2	-35.8	+46.8	-53.7
9'-0"	8'-0"	+31.2	-35.8	+46.8	-53.7

DOORS SHOWN ON THIS DRAWING HAVE BEEN DEMONSTRATED TO WITHSTAND THE PRESSURES LISTED IN THE TABLE ABOVE VIA TESTING TO ANSI/DASMA 108-05.

DETERMINATION OF SUITABILITY FOR SPECIFIC SITES IS THE RESPONSIBILITY OF OTHERS.

John E Scates PE
3121 FAIRGATE DR.
Carrollton, TX 75007
TX-PE 56308-F-2203
FL-PE-51737
(972) 492-9500

Professional Engineer's seal provided only for verification of windload construction details.

STATE OF TEXAS
JOHN E. SCATES
56308
REGISTERED
PROFESSIONAL ENGINEER

John E Scates
2/1/13

REV.	E.C.N.	DATE:	APPROV.
C	REV LOGO & ADDRESS	1/28/13	
B	———	12/15/11	RLB
A	2866	3/10/08	RLB
	2851	11/1/07	RLB

WINDSOR DOOR

5800 SCOTT HAMILTON DR.
LITTLE ROCK, AR 72209
(501) 562-1872

MODELS: 790

PART NAME: WINDLOAD RESIDENTIAL SANDWICH DOOR W4 B

TOLERANCE: FRAC. ± 1/64" DEC. ± .015 ANG. ± 1°

NEXT LEVEL

DATE: 11/1/07

DWG. NO. 99-B-088

SCALE

PLOT SCALE

DRN. BY BH

SHT 1 OF 3

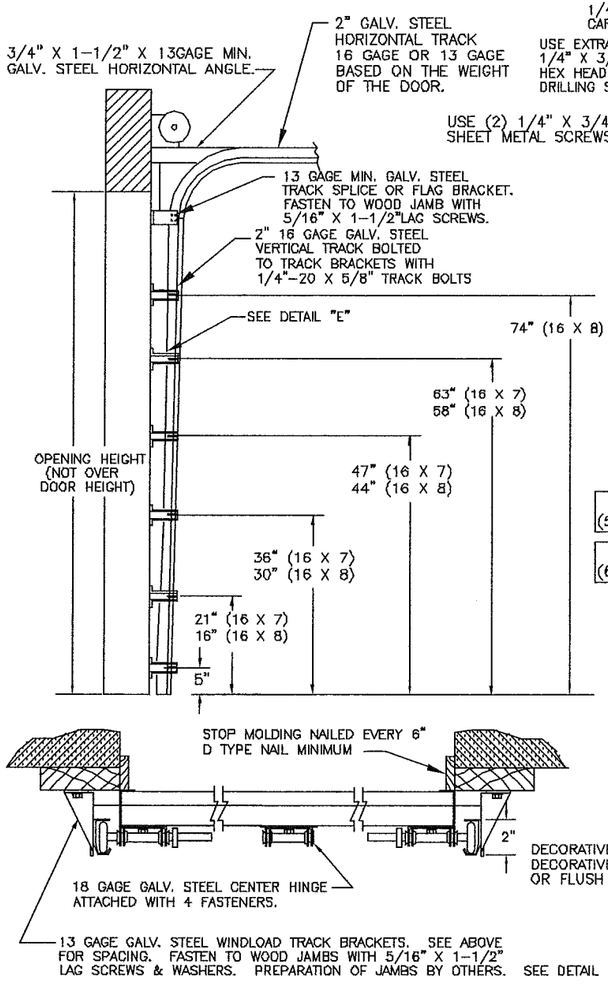

SECTION B-B

NOTE: ALL NON-DESCRIPTIVE FASTENERS SHOWN TO BE 1/4"-20 X 5/8" HEX BOLTS & NUTS OR 1/4" X 3/4" LONG HEX HEAD SHEET METAL SCREWS.

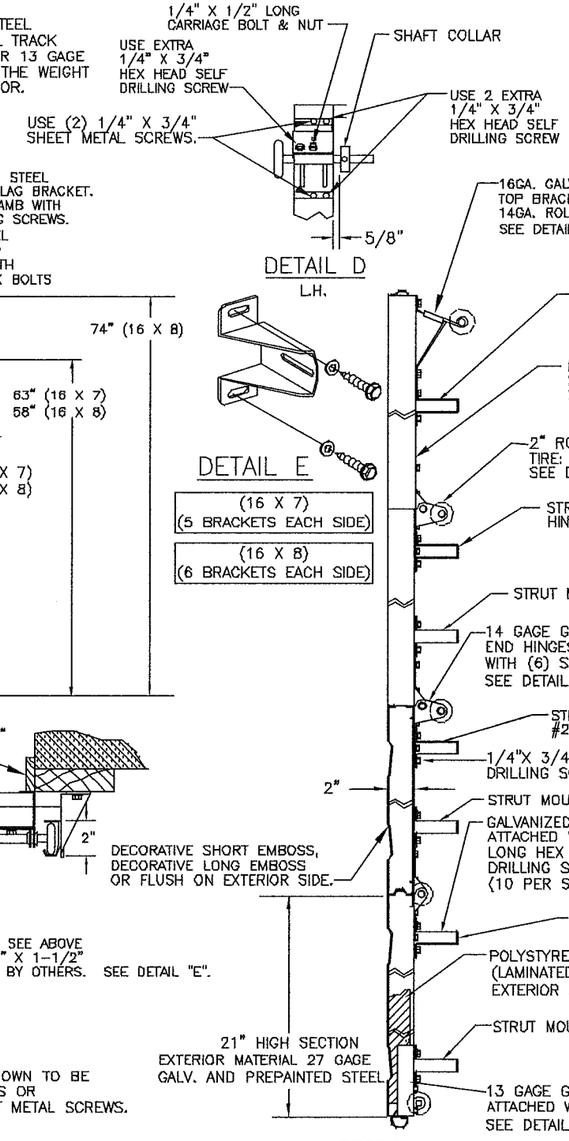

SECTION A-A

4 SECTION

NOTE: DOOR MUST BE INSTALLED WITH EITHER AN ELECTRIC OPERATOR OR A LOCK (MUST ENGAGE BOTH TRACKS ON DOORS WITH EXTENSION SPRINGS).

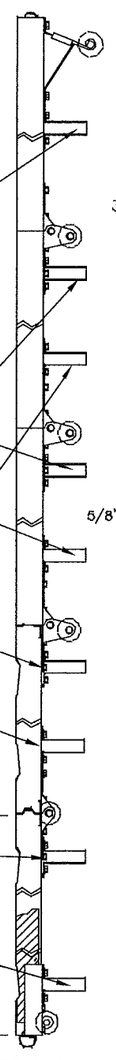

SECTION C-C

5 SECTION

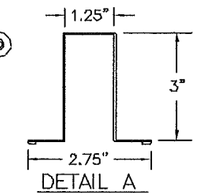

DETAIL A

3" 18GA WIDE STRUT

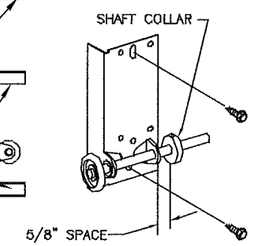

DETAIL "F"

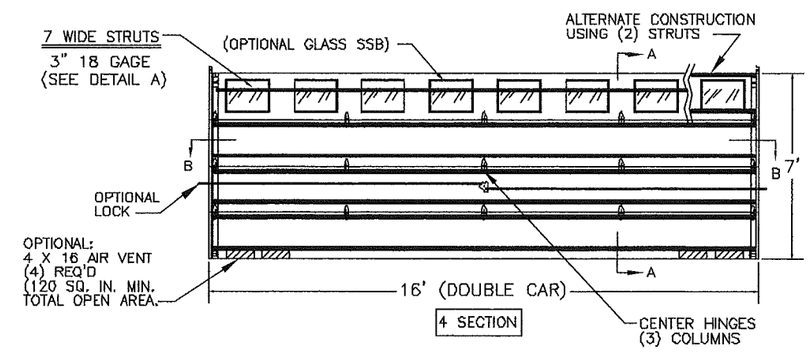

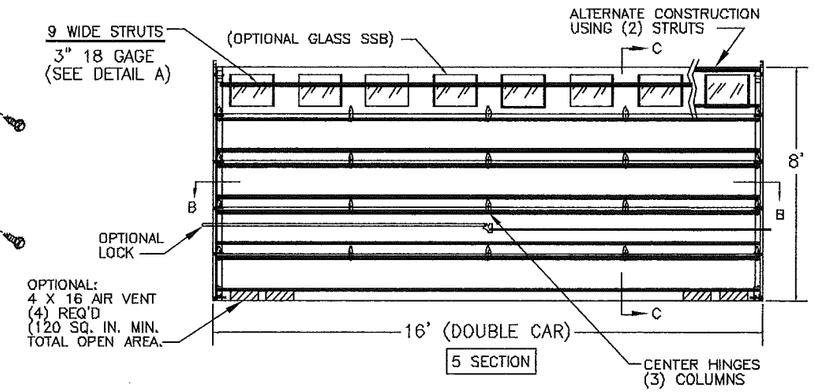

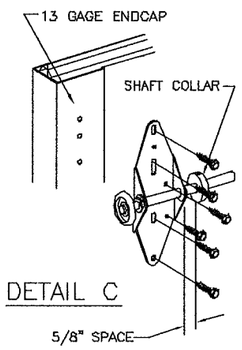

DETAIL C

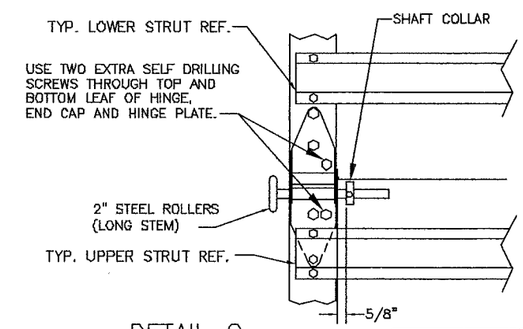

DETAIL G

L.H.

NOTE: GLAZING DOES NOT SATISFY IMPACT DEBRIS REQUIREMENTS IN FBC

FL 15078

16' X 7'	
16' X 8'	

DOOR SIZE		P.S.F. TABLE			
		DESIGN PRESSURE		TEST PRESSURE	
WIDTH	HEIGHT	POSITIVE	NEGATIVE	POSITIVE	NEGATIVE
16'-0"	7'-0"	+35.3	-38.9	+53.0	-58.4
16'-0"	8'-0"	+35.3	-38.9	+53.0	-58.4

DOORS SHOWN ON THIS DRAWING HAVE BEEN DEMONSTRATED TO WITHSTAND THE PRESSURES LISTED IN THE TABLE ABOVE VIA TESTING TO ANSI/DASMA 108-05.

DETERMINATION OF SUITABILITY FOR SPECIFIC SITES IS THE RESPONSIBILITY OF OTHERS.

John E Scates PE
3121 FAIRGATE DR.
Carrollton, TX 75007
TX-PE 56308-F-2203
FL-PE-51737
(972) 492-9500

Professional Engineer's seal provided only for verification of windload construction details.

STATE OF TEXAS
JOHN E. SCATES
56308
LICENSED
PROFESSIONAL ENGINEER

John E. Scates
2/1/13

REV.	E.C.N.	DATE:	APPROV.
C	REV LOGO & ADDRESS		1/28/13
B	——	12/15/11	RLB
A	2866	3/10/08	RLB
	2851	11/1/07	RLB

WINDSOR DOOR

5800 SCOTT HAMILTON DR.
LITTLE ROCK, AR 72209
(501) 562-1872

MODELS: 790

PART NAME: WINDLOAD RESIDENTIAL SANDWICH DOOR

TOLERANCE: W4 B

FRAC. ± 1/64" DEC. ± .015 ANG. ± 1°

NEXT LEVEL

DATE: 11/1/07

DWG. NO. 99-B-088

SCALE

PLOT SCALE

DRN. BY BH

SHT 2 OF 3

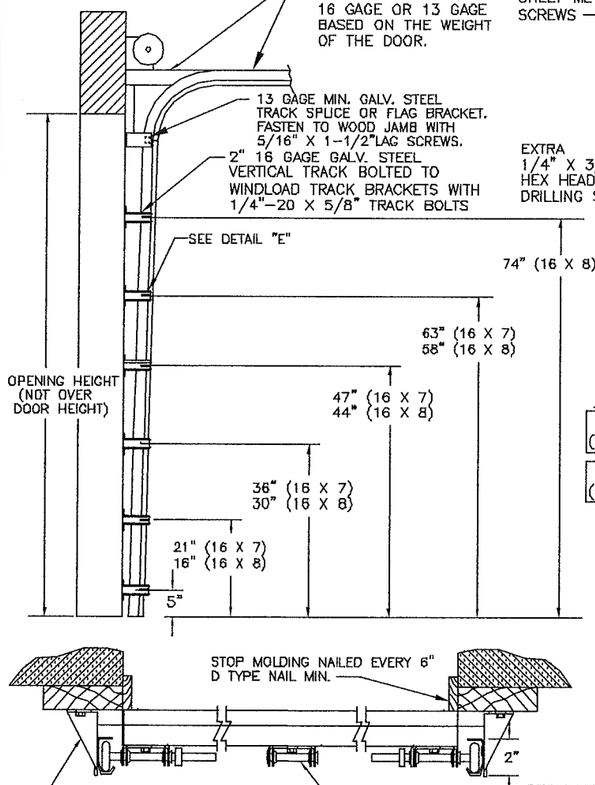

SECTION B-B

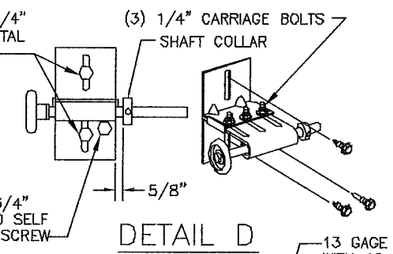

DETAIL D

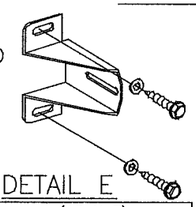

DETAIL E

(16 X 7)
(5 BRACKETS EACH SIDE)

(16 X 8)
(6 BRACKETS EACH SIDE)

NOTE: DOOR MUST BE INSTALLED WITH EITHER AN ELECTRIC OPERATOR OR A LOCK (MUST ENGAGE BOTH TRACKS ON DOORS WITH EXTENSION SPRINGS).

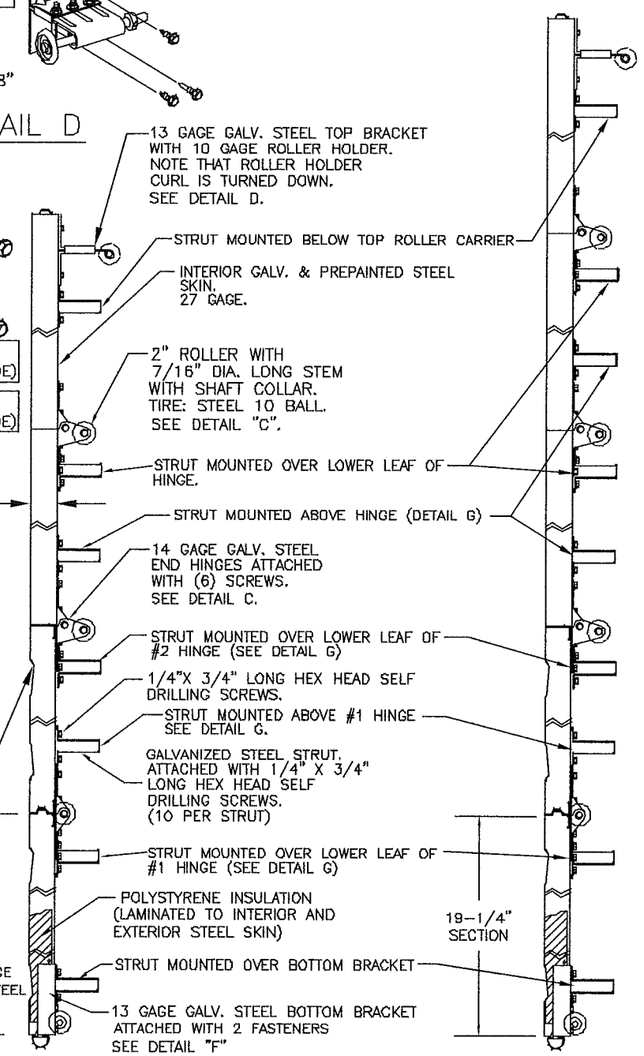

SECTION A-A

4 SECTION

SECTION C-C

5 SECTION

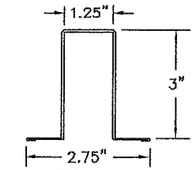

DETAIL A

3" 18GA WIDE STRUT

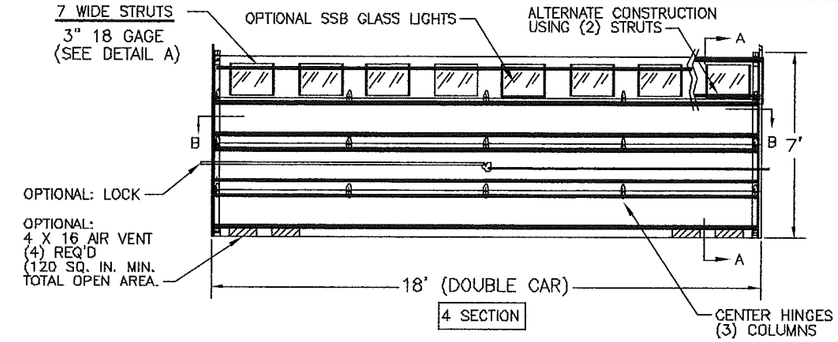

4 SECTION

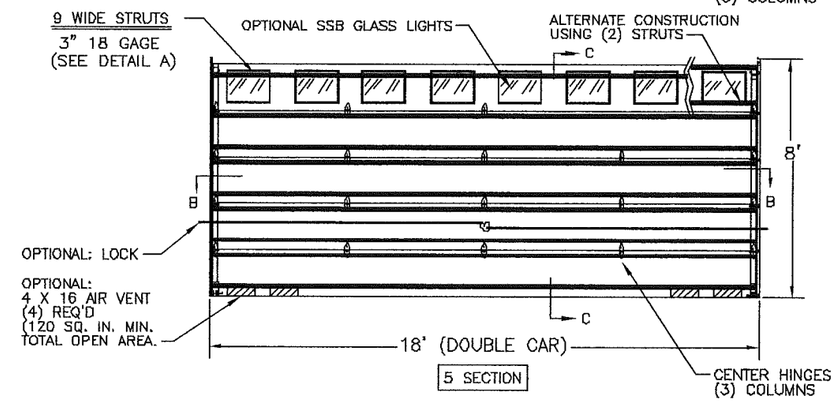

5 SECTION

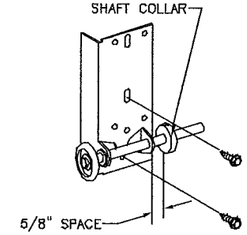

DETAIL "F"

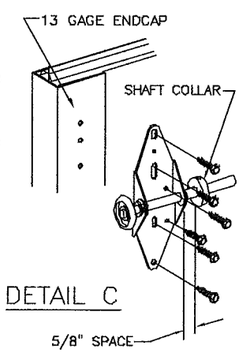

DETAIL C

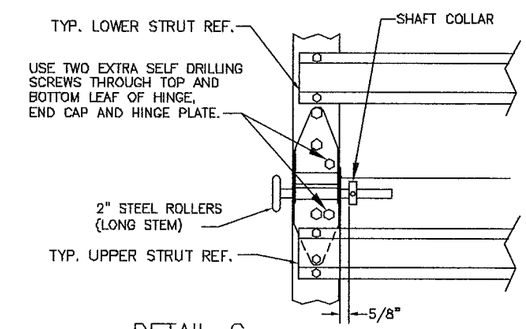

DETAIL G

L.H.

NOTE: ALL NON-DESCRIPTIVE FASTENERS SHOWN TO BE 1/4"-20 X 5/8" HEX BOLTS & NUTS OR 1/4" X 3/4" LONG HEX HEAD SHEET METAL SCREWS.

NOTE: GLAZING DOES NOT SATISFY IMPACT DEBRIS REQUIREMENTS IN FBC

FL 15078

18' X 7'
18' X 8'

P.S.F. TABLE

DOOR SIZE		DESIGN PRESSURE		TEST PRESSURE	
WIDTH	HEIGHT	POSITIVE	NEGATIVE	POSITIVE	NEGATIVE
18'-0"	7'-0"	+31.2	-34.0	+46.8	-51.0
18'-0"	8'-0"	+31.2	-34.0	+46.8	-51.0

DOORS SHOWN ON THIS DRAWING HAVE BEEN DEMONSTRATED TO WITHSTAND THE PRESSURES LISTED IN THE TABLE ABOVE VIA TESTING TO ANSI/DASMA 108-05.

DETERMINATION OF SUITABILITY FOR SPECIFIC SITES IS THE RESPONSIBILITY OF OTHERS.

John E Scates PE
3121 FAIRGATE DR.
Carrollton, TX 75007
TX-PE 56308-F-2203
FL-PE-51737
(972) 492-9500

Professional Engineer's seal provided only for verification of windload construction details.

STATE OF TEXAS
JOHN E. SCATES
56308
REGISTERED
PROFESSIONAL ENGINEER

John E Scates
2/1/13

REV.	E.C.N.	DATE:	APPROV.
C	REV LOGO & ADDRESS		1/28/13
B	——	12/15/11	RLB
A	2866	3/10/08	RLB
	2851	11/1/07	RLB

WINDSOR DOOR

5800 SCOTT
HAMILTON DR.
LITTLE ROCK, AR
72209
(501) 562-1872

MODELS: 790

PART NAME: WINDLOAD RESIDENTIAL SANDWICH DOOR

TOLERANCE: W4 B

FRAC. ±1/64" DEC. ± .015 ANG. ± 1°

NEXT LEVEL

DATE: 11/1/07

DWG. NO. 99-B-088

SCALE

PLOT SCALE

DRN. BY BH

SHT 3 OF 3