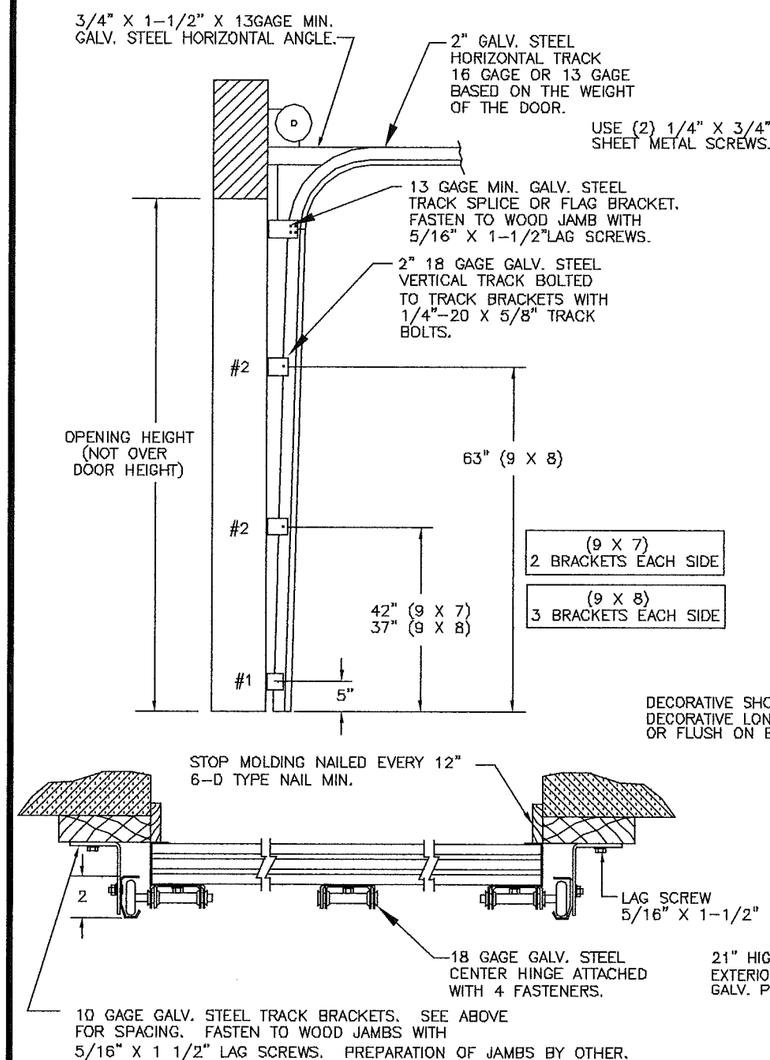

SECTION B-B

DETAIL D

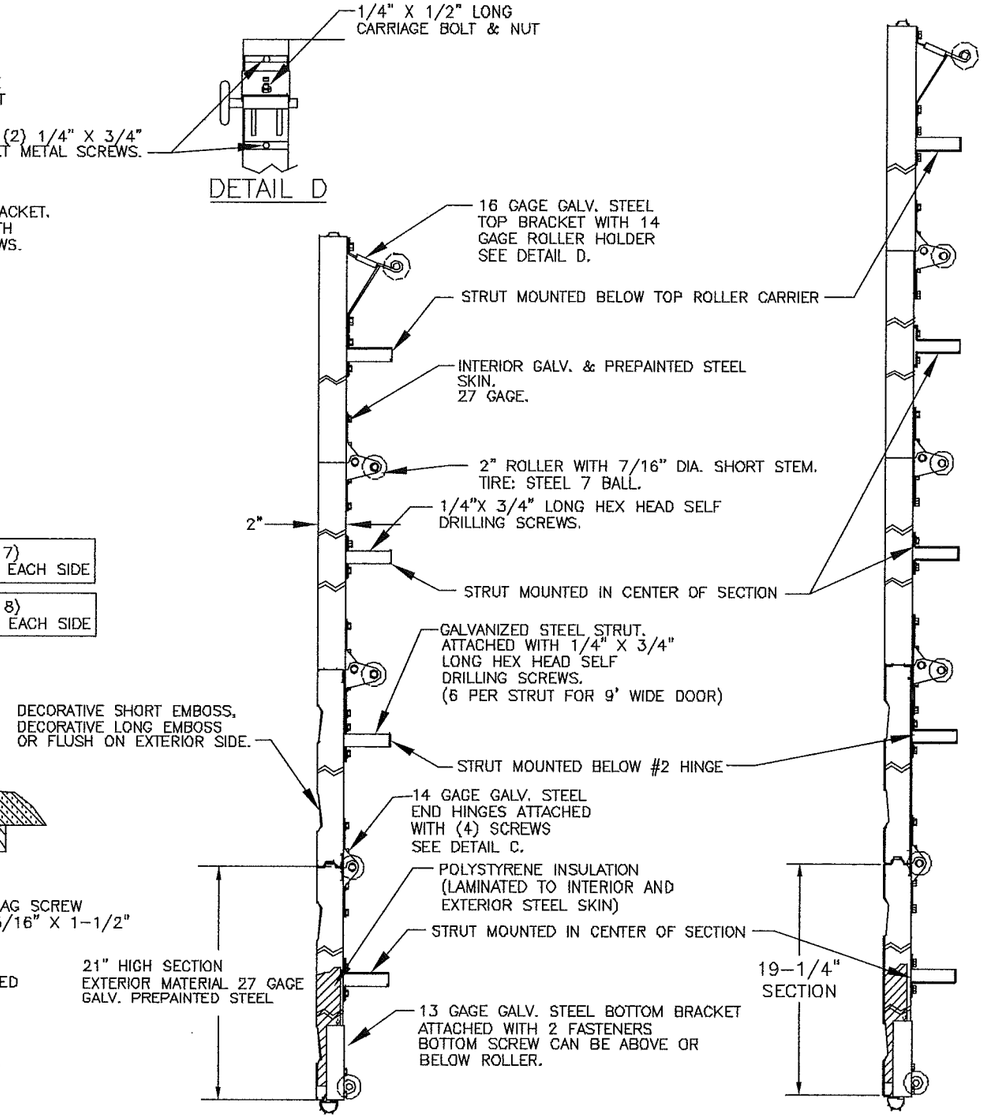

SECTION A-A

4 SECTIONS

SECTION C-C

5 SECTIONS

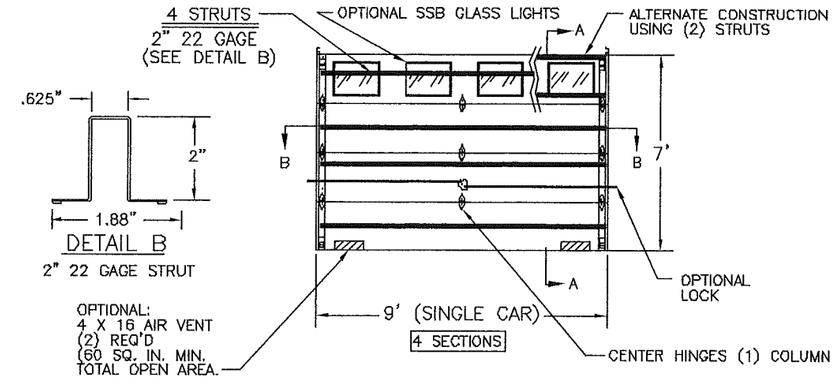

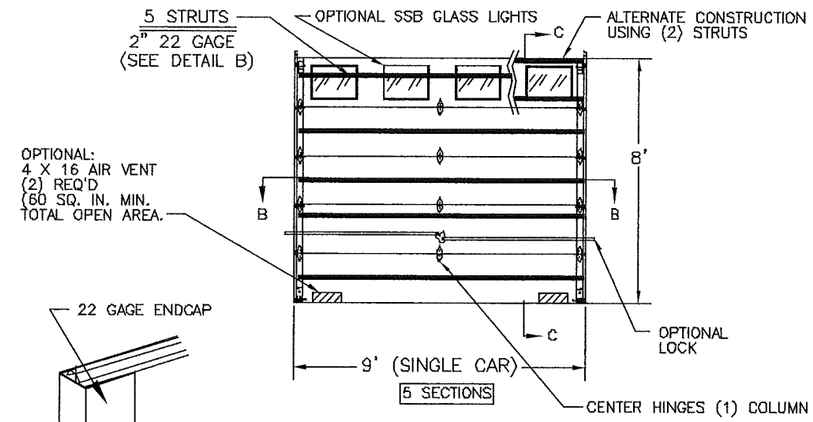

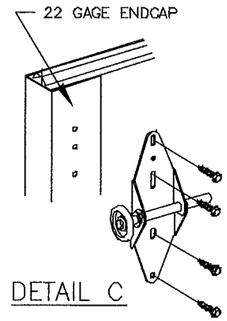

DETAIL C

NOTE: DOOR MUST BE INSTALLED WITH EITHER AN ELECTRIC OPERATOR OR A LOCK (MUST ENGAGE BOTH TRACKS ON DOORS WITH EXTENSION SPRINGS).

FL 15078

9 X 7 | 9 X 8

NOTE: GLAZING DOES NOT SATISFY IMPACT DEBRIS REQUIREMENTS IN FBC

NOTE: ALL NON-DESCRIPTIVE FASTENERS SHOWN TO BE 1/4"-20 X 5/8" HEX BOLTS & NUTS OR 1/4" X 3/4" LONG HEX HEAD SHEET METAL SCREWS.

		P.S.F. TABLE			
DOOR SIZE		DESIGN PRESSURE		TEST PRESSURE	
WIDTH	HEIGHT	POSITIVE	NEGATIVE	POSITIVE	NEGATIVE
9'-0"	7'-0"	+19.8	-22.2	+29.7	-33.3
9'-0"	8'-0"	+19.8	-22.2	+29.7	-33.3

DOORS SHOWN ON THIS DRAWING HAVE BEEN DEMONSTRATED TO WITHSTAND THE PRESSURES LISTED IN THE TABLE ABOVE VIA TESTING TO ANSI/DASMA 108-05.

DETERMINATION OF SUITABILITY FOR SPECIFIC SITES IS THE RESPONSIBILITY OF OTHERS.

John E Scates PE
3121 FAIRGATE DR.
Carrollton, TX 75007
TX-PE 56308-F-2203
FL-PE-51737
(972) 492-9500

Professional Engineer's seal provided only for verification of windload construction details.

STATE OF TEXAS
JOHN E. SCATES
56308

John E Scates
2/1/13

REV.	E.C.N.	DATE:	APPROV.
C	REV LOGO & ADDRESS		1/28/13
B	——	12/15/11	RLB
A	2866	3/10/08	RLB
	2851	11/1/07	RLB

WINDSOR DOOR
5800 SCOTT HAMILTON DR.
LITTLE ROCK, AR 72209
(501) 562-1872

MODELS: 790

DWG. WAS

PART NAME: WINDLOAD RESIDENTIAL SANDWICH DOOR W1 B

TOLERANCE: FRAC. ± 1/64" DEC. ± .015 ANG. ± 1°

NEXT LEVEL

DATE: 11/1/07

DWG. NO. 99-B-085

SCALE NONE

PLOT SCALE

DRN. BY BH

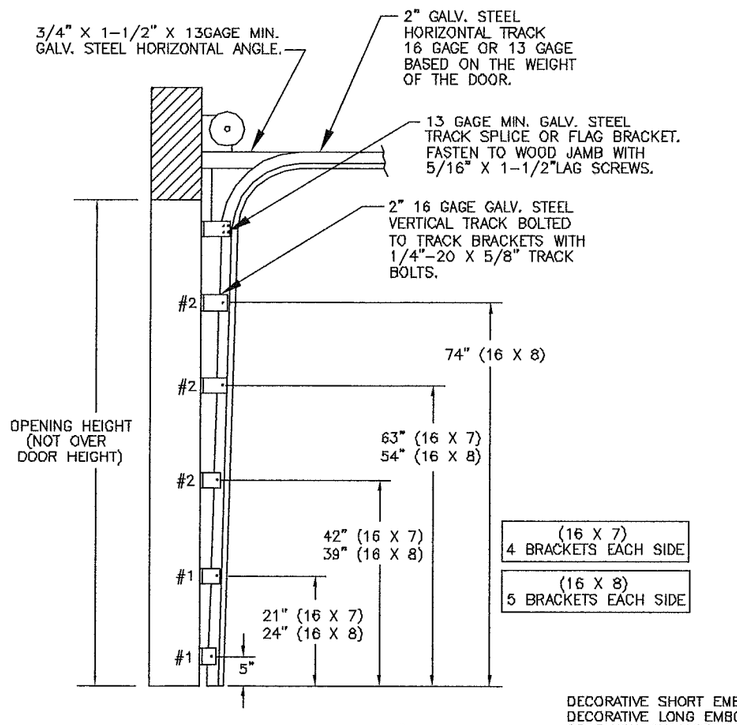

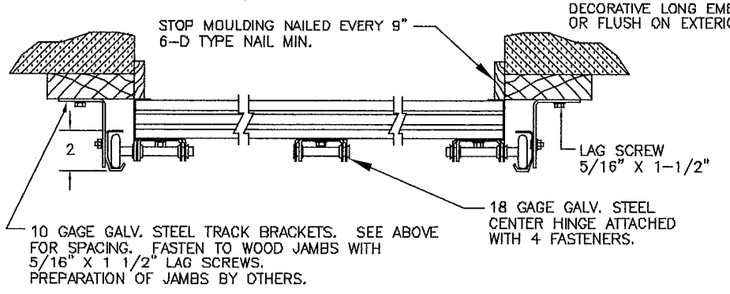

SECTION B-B

NOTE: ALL NON-DESCRIPTIVE FASTENERS SHOWN TO BE 1/4"-20 X 5/8" HEX BOLTS & NUTS OR 1/4" X 3/4" LONG HEX HEAD SHEET METAL SCREWS.

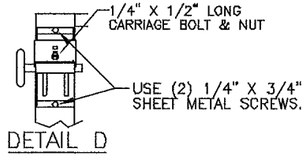

DETAIL D

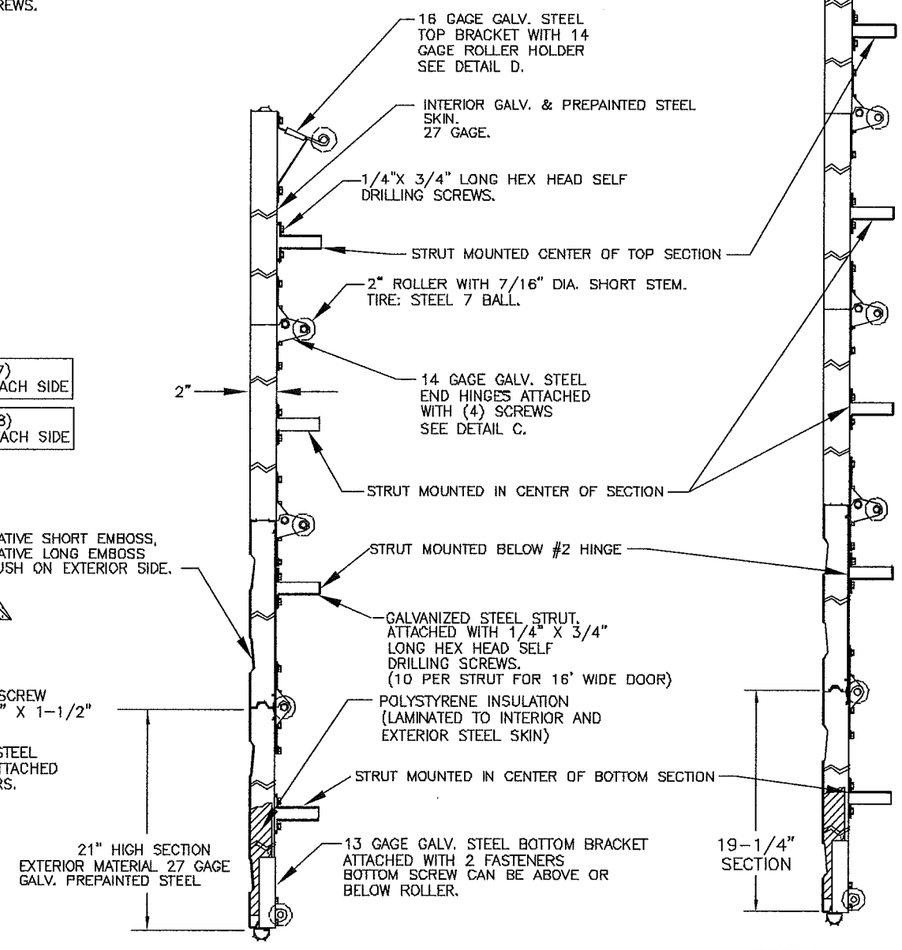

SECTION A-A

4 SECTIONS

SECTION C-C

5 SECTIONS

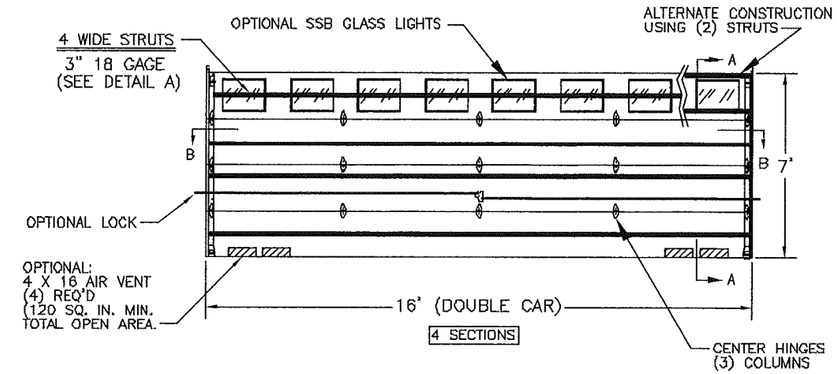

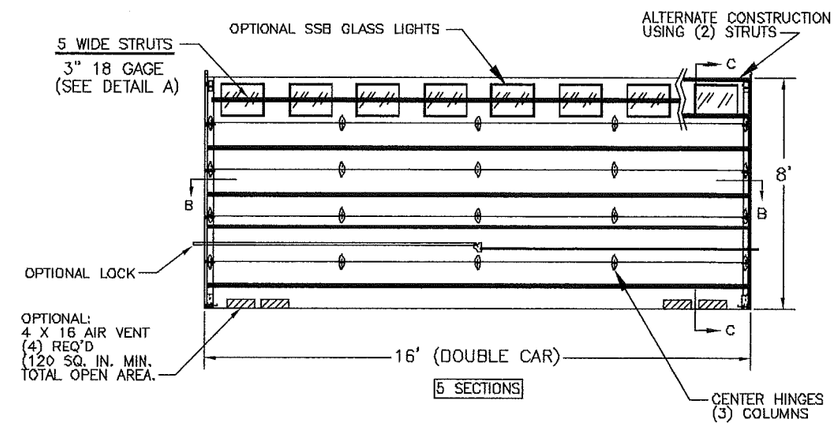

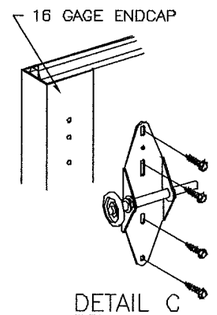

DETAIL C

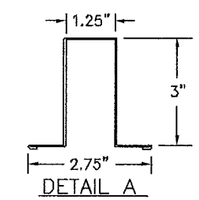

DETAIL A

3" 18GA WIDE STRUT

NOTE: DOOR MUST BE INSTALLED WITH EITHER AN ELECTRIC OPERATOR OR A LOCK (MUST ENGAGE BOTH TRACKS ON DOORS WITH EXTENSION SPRINGS).

FL 15078

NOTE: GLAZING DOES NOT SATISFY IMPACT DEBRIS REQUIREMENTS IN FBC

16 X 7 | 16 X 8

	P.S.F. TABLE			
DOOR SIZE		DESIGN PRESSURE		TEST PRESSURE	
WIDTH	HEIGHT	POSITIVE	NEGATIVE	POSITIVE	NEGATIVE
16'-0"	7'-0"	+18.7	-20.8	+28.1	-31.2
16'-0"	8'-0"	+18.7	-20.8	+28.1	-31.2

DOORS SHOWN ON THIS DRAWING HAVE BEEN DEMONSTRATED TO WITHSTAND THE PRESSURES LISTED IN THE TABLE ABOVE VIA TESTING TO ANSI/DASMA 108-05.

DETERMINATION OF SUITABILITY FOR SPECIFIC SITES IS THE RESPONSIBILITY OF OTHERS.

John E Scates PE
3121 FAIRGATE DR.
Carrollton, TX 75007
TX-PE 56308-F-2203
FL-PE-51737
(972) 492-9500

Professional Engineer's seal provided only for verification of windload construction details.

STATE OF TEXAS
JOHN E. SCATES
56308
PROFESSIONAL ENGINEER

John E Scates
2/1/13

REV.	E.C.N.	DATE:	APPROV.
C	REV LOGO & ADDRESS		1/28/13
B	———	12/15/11	RLB
A	2866	3/10/08	RLB
	2851	11/1/07	RLB

WINDSOR DOOR

5800 SCOTT HAMILTON DR.
LITTLE ROCK, AR 72209
(501) 562-1872

MODELS: 790

DWG. WAS

PART NAME: WINDLOAD RESIDENTIAL SANDWICH DOOR W1 B

TOLERANCE: FRAC. ± 1/64" DEC. ± .015 ANG. ± 1°

NEXT LEVEL

DATE: 11/1/07

DWG. NO. 99-B-085

SCALE NONE

PLOT SCALE

DRN. BY BH

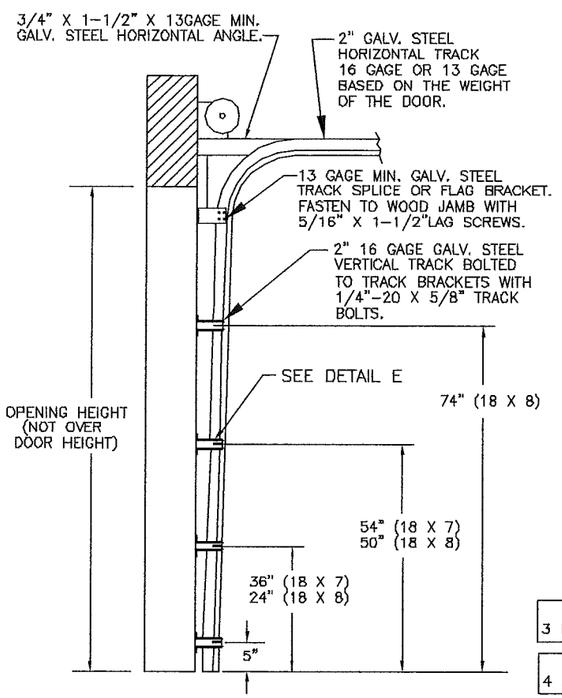

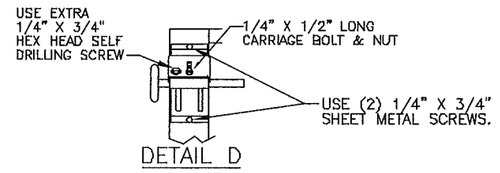

DETAIL D

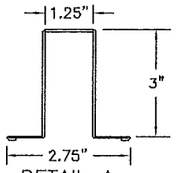

DETAIL A

3" 18GA WIDE STRUT

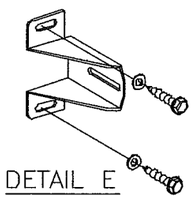

DETAIL E

18 x 7 3 BRACKETS EACH SIDE
18 x 8 4 BRACKETS EACH SIDE

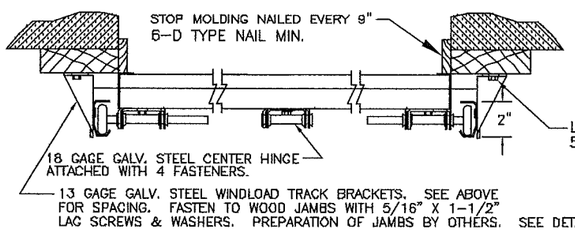

SECTION B-B

NOTE: ALL NON-DESCRIPTIVE FASTENERS SHOWN TO BE 1/4"-20 X 5/8" HEX BOLTS & NUTS OR 1/4" X 3/4" LONG HEX HEAD SHEET METAL SCREWS.

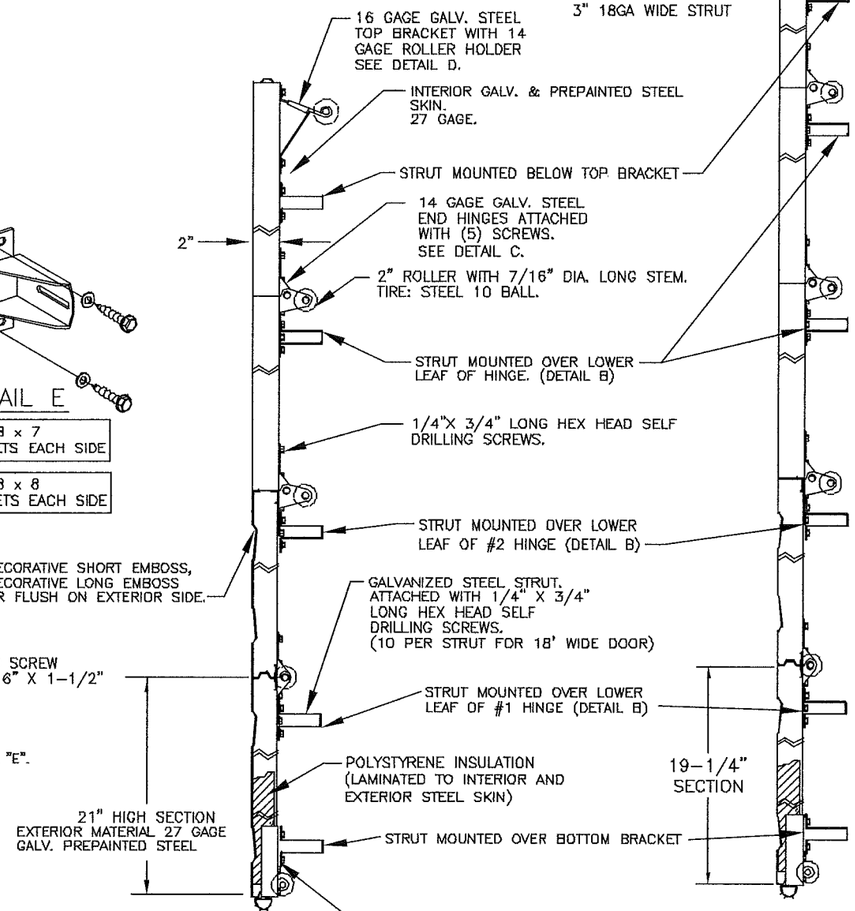

SECTION A-A

4 SECTIONS

SECTION C-C

5 SECTIONS

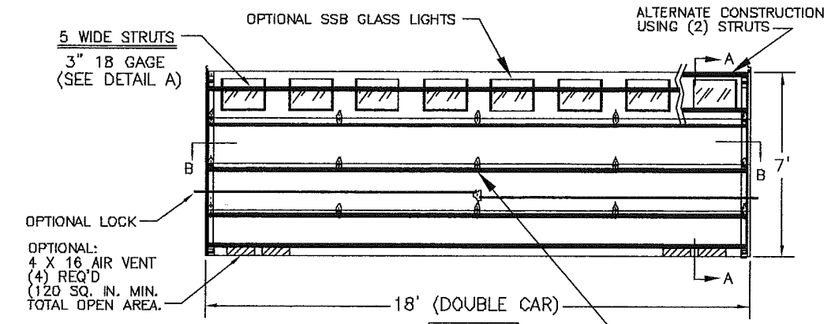

4 SECTIONS

NOTE: DOOR MUST BE INSTALLED WITH EITHER AN ELECTRIC OPERATOR OR A LOCK (MUST ENGAGE BOTH TRACKS ON DOORS WITH EXTENSION SPRINGS).

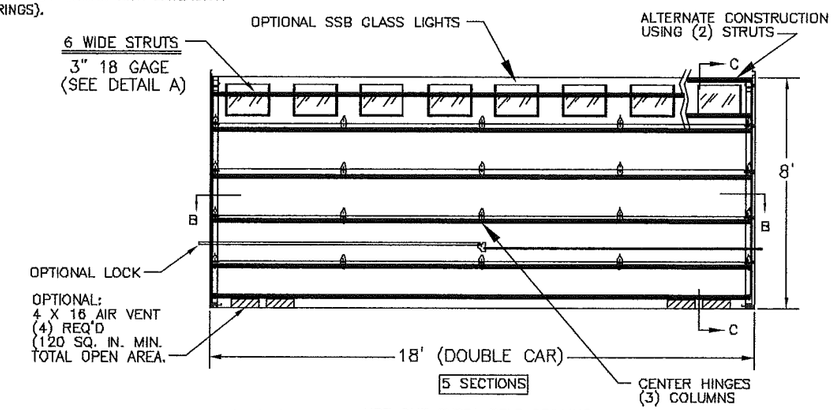

5 SECTIONS

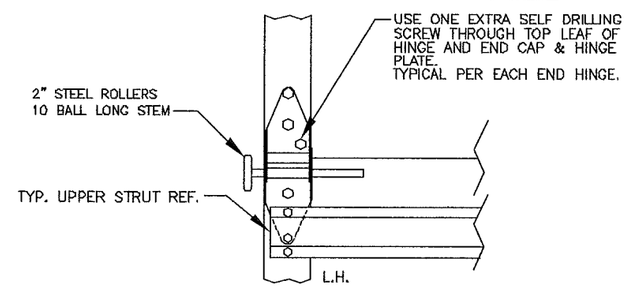

DETAIL B

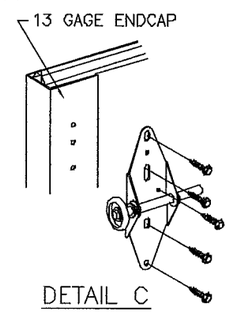

DETAIL C

FL 15078

18 X 7	18 X 8

NOTE: GLAZING DOES NOT SATISFY IMPACT DEBRIS REQUIREMENTS IN FBC

P.S.F. TABLE

DOOR SIZE		DESIGN PRESSURE		TEST PRESSURE	
WIDTH	HEIGHT	POSITIVE	NEGATIVE	POSITIVE	NEGATIVE
18'-0"	7'-0"	+18.7	-20.8	+28.1	-31.2
18'-0"	8'-0"	+18.7	-20.8	+28.1	-31.2

DOORS SHOWN ON THIS DRAWING HAVE BEEN DEMONSTRATED TO WITHSTAND THE PRESSURES LISTED IN THE TABLE ABOVE VIA TESTING TO ANSI/DASMA 108-05.

DETERMINATION OF SUITABILITY FOR SPECIFIC SITES IS THE RESPONSIBILITY OF OTHERS.

John E Scates PE
3121 FAIRGATE DR.
Carrollton, TX 75007
TX-PE 56308-F-2203
FL-PE-51737
(972) 492-9500

Professional Engineer's seal provided only for verification of windload construction details.

STATE OF TEXAS
JOHN E. SCATES
56308
PROFESSIONAL ENGINEER

John E Scates
2/1/13

REV.	E.C.N.	DATE:	APPROV.
C	REV LOGO & ADDRESS		1/28/13
B	——	12/15/11	RLB
A	2866	3/10/08	RLB
	2851	11/1/07	RLB

WINDSOR DOOR
5800 SCOTT HAMILTON DR.
LITTLE ROCK, AR 72209
(501) 562-1872

MODELS: 790

DWG. WAS

PART NAME: WINDLOAD RESIDENTIAL SANDWICH DOOR W1 B

TOLERANCE: FRAC. ± 1/64" DEC. ± .015 ANG. ± 1°

NEXT LEVEL

DATE: 11/1/07

DWG. NO. 99-B-085

SCALE NONE

PLOT SCALE

DRN. BY BH