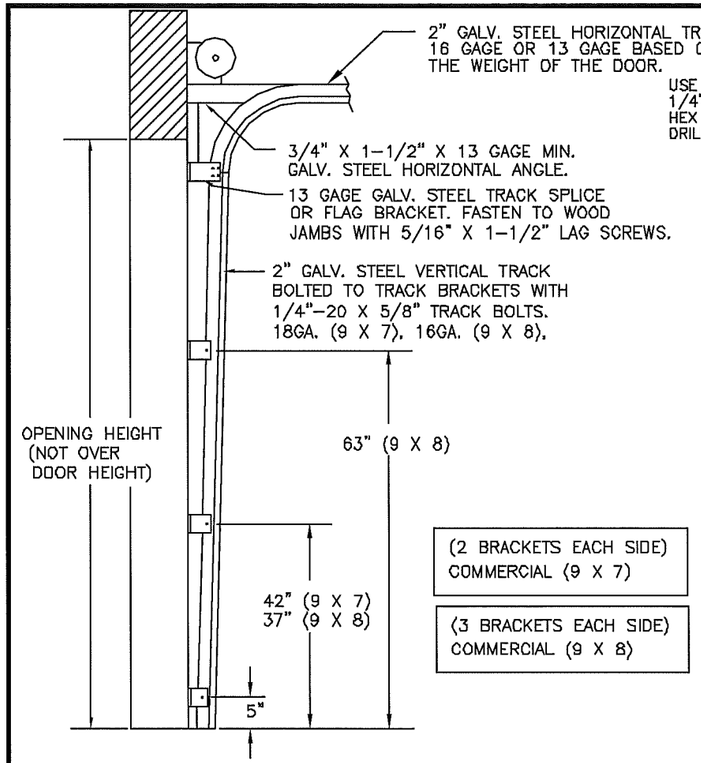

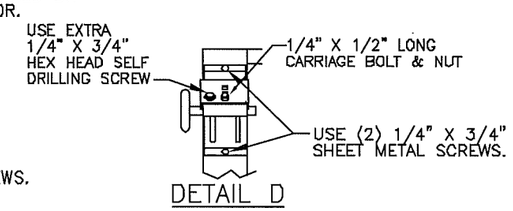

DETAIL D

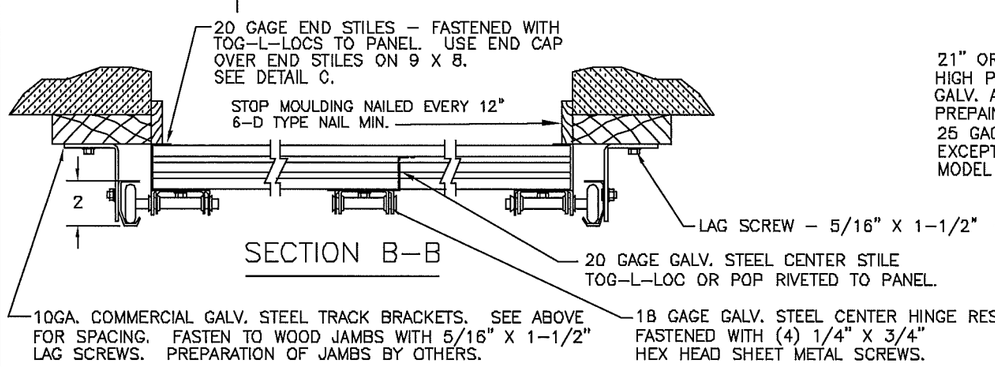

SECTION B-B

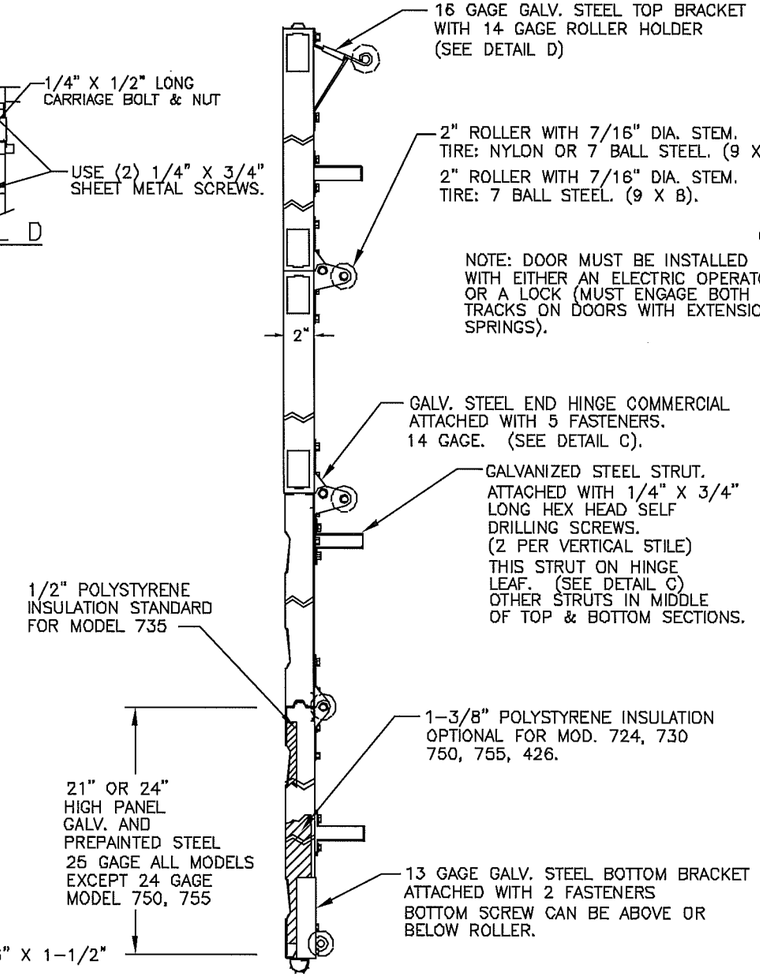

SECTION A-A

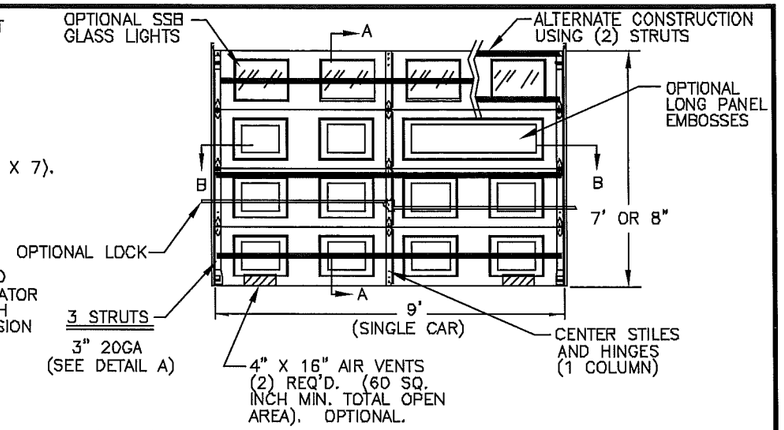

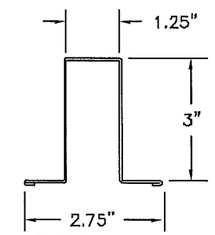

DETAIL A

3" 20GA WIDE STRUT

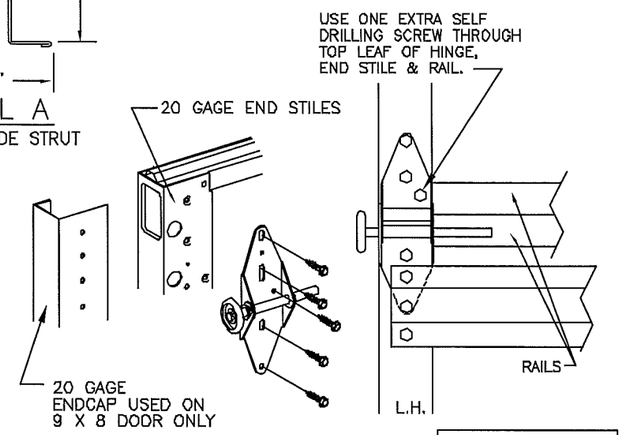

DETAIL C

9	X 7
9	X 8

NOTE: GLAZING DOES NOT SATISFY IMPACT DEBRIS REQUIREMENTS IN FBC

FL 15080

P.S.F. TABLE					
DOOR SIZE		DESIGN PRESSURE		TEST PRESSURE	
WIDTH	HEIGHT	POSITIVE	NEGATIVE	POSITIVE	NEGATIVE
9'-0"	7'-0"	+22.9	-26.4	+34.4	-39.6
9'-0"	8'-0"	+19.2	-22.2	+28.8	-33.3

NOTE: ALL NON-DESCRIPTIVE FASTENERS SHOWN TO BE 1/4"-20 X 5/8" HEX BOLTS & NUTS OR 1/4" X 3/4" LONG HEX HEAD SHEET METAL SCREWS.

DOORS SHOWN ON THIS DRAWING HAVE BEEN DEMONSTRATED TO WITHSTAND THE PRESSURES LISTED IN THE TABLE ABOVE VIA TESTING TO ANSI/DASMA 108-05.

DETERMINATION OF SUITABILITY FOR SPECIFIC SITES IS THE RESPONSIBILITY OF OTHERS.

John E Scates PE
3121 FAIRGATE DR.
Carrollton, TX 75007
TX-PE 56308-F-2203
FL-PE-51737
(972) 492-9500

Professional Engineer's seal provided only for verification of windload construction details.

STATE OF TEXAS
JOHN E. SCATES
56308
PROFESSIONAL ENGINEER

John E Scates
6/24/13

REV.	E.C.N.	DATE:	APPROV.
C	REV LOGO & ADDRESS		1/28/13
B	—	12/15/11	RLB
A	2866	3/10/08	RLB
	2848	11/1/07	RLB

WINDSOR DOOR

5800 SCOTT
HAMILTON DR.
LITTLE ROCK, AR
72209
(501) 562-1872

MODELS:
724, 426, 730, 735, 750, 755

PART NAME:
WINDLOAD RESIDENTIAL PAN DOOR
W1 B

TOLERANCE
FRAC. ± 1/64"
DEC. ± .015
ANG. ± 1°

SCALE NONE

NEXT LEVEL

PLOT SCALE

DATE: 11/1/07

DRN. BY BH

DWG. NO. 99-B-079

SHT 1 OF 3

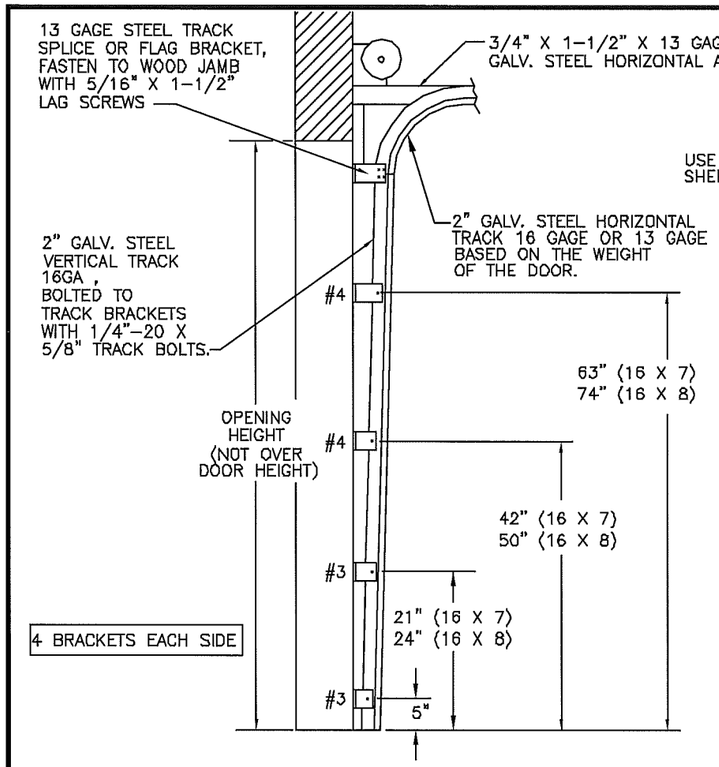

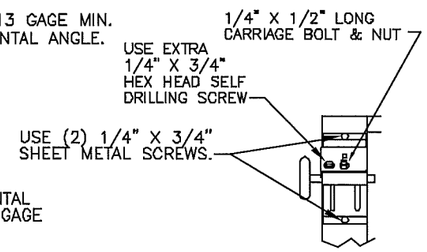

DETAIL D

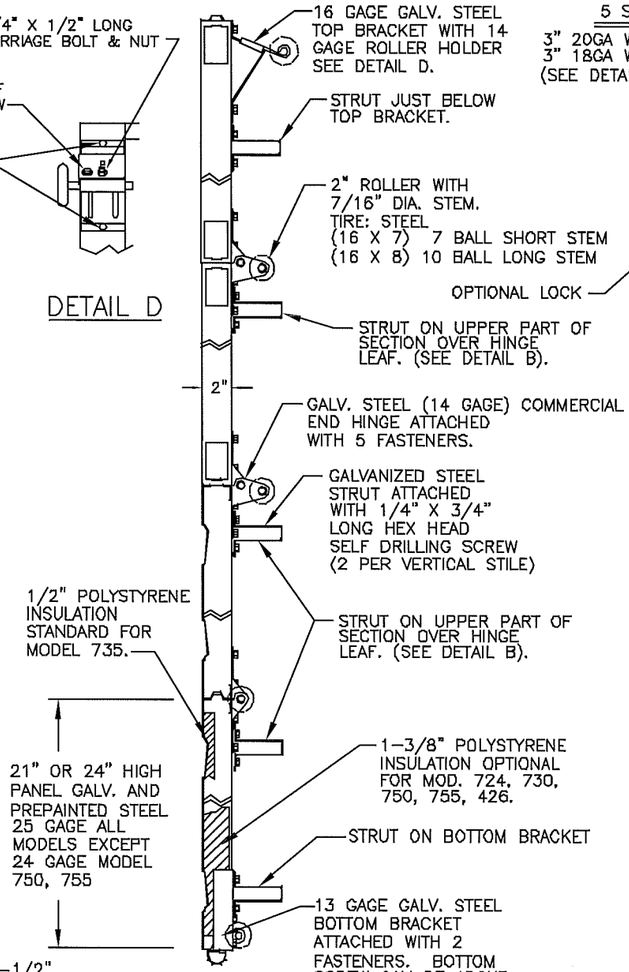

SECTION A-A

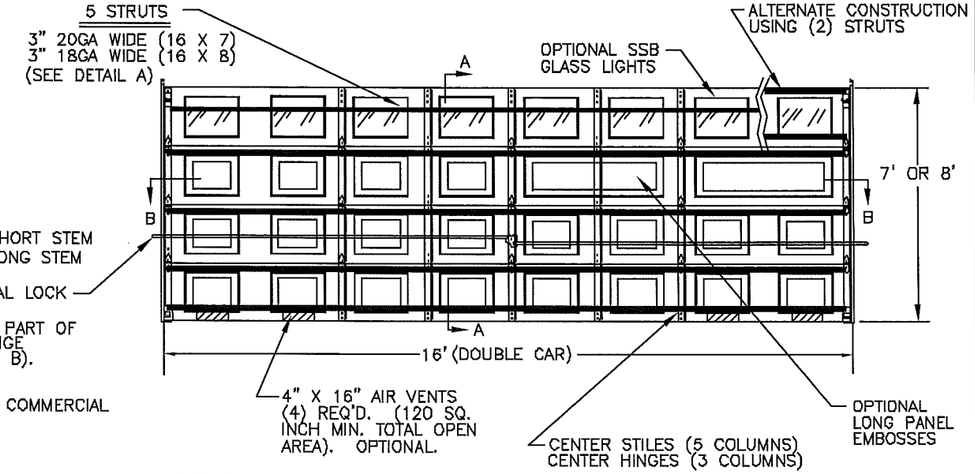

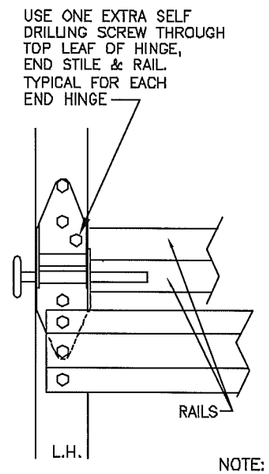

DETAIL B

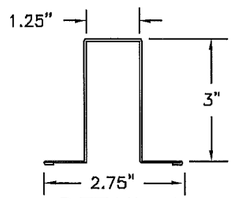

DETAIL A

3" 20GA WIDE STRUT (16 X 7)
3" 18GA WIDE STRUT (16 X 8)

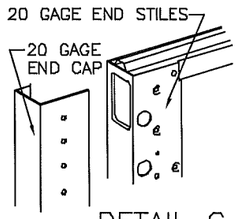

DETAIL C

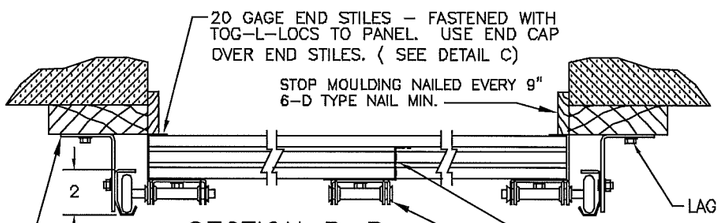

SECTION B-B

20 GAGE GALV. STEEL CENTER STILE TOG-L-LOC OR POP RIVETED TO PANEL.

18 GAGE GALV. STEEL CENTER HINGE RESIDENTIAL FASTENED WITH (4) 1/4" X 3/4" HEX HEAD SHEET METAL SCREWS.

10GA. COMMERCIAL GALV. STEEL TRACK BRACKETS. SEE ABOVE FOR SPACING. FASTEN TO WOOD JAMBS WITH 5/16" X 1-1/2" LAG SCREWS. PREPARATION OF JAMBS BY OTHERS.

NOTE: DOOR MUST BE INSTALLED WITH EITHER AN ELECTRIC OPERATOR OR A LOCK (MUST ENGAGE BOTH TRACKS ON DOORS WITH EXTENSION SPRINGS).

16' X 7'
16' X 8'

NOTE: GLAZING DOES NOT SATISFY IMPACT DEBRIS REQUIREMENTS IN FBC

FL 15080

P.S.F. TABLE

DOOR SIZE		DESIGN PRESSURE		TEST PRESSURE	
WIDTH	HEIGHT	POSITIVE	NEGATIVE	POSITIVE	NEGATIVE
16'-0"	7'-0"	+18.7	-20.8	+28.1	-31.2
16'-0"	8'-0"	+18.7	-20.8	+28.1	-31.2

NOTE: ALL NON-DESCRIPTIVE FASTENERS SHOWN TO BE 1/4"-20 X 5/8" HEX BOLTS & NUTS OR 1/4" X 3/4" LONG HEX HEAD SHEET METAL SCREWS.

DOORS SHOWN ON THIS DRAWING HAVE BEEN DEMONSTRATED TO WITHSTAND THE PRESSURES LISTED IN THE TABLE ABOVE VIA TESTING TO ANSI/DASMA 108-05.

DETERMINATION OF SUITABILITY FOR SPECIFIC SITES IS THE RESPONSIBILITY OF OTHERS.

John E Scates PE
3121 FAIRGATE DR.
Carrollton, TX 75007
TX-PE 56308-F-2203
FL-PE-51737
(972) 492-9500

Professional Engineer's seal provided only for verification of windload construction details.

STATE OF TEXAS
JOHN E. SCATES
56308
PROFESSIONAL ENGINEER

John E Scates
6/24/13

REV.	E.C.N.	DATE:	APPROV.
C	REV LOGO & ADDRESS		1/28/13
B	——	12/15/11	RLB
A	2866	3/10/08	RLB
	2848	11/1/07	RLB

WINDSOR DOOR

5800 SCOTT
HAMILTON DR.
LITTLE ROCK, AR
72209
(501) 562-1872

MODELS:
724, 426, 730, 735, 750, 755

PART NAME:
WINDLOAD RESIDENTIAL PAN DOOR
W1 B

TOLERANCE
FRAC. ± 1/64"
DEC. ± .015
ANG. ± 1°

NEXT LEVEL

DATE: 11/1/07

DWG. NO. 99-B-079

SCALE NONE

PLOT SCALE

DRN. BY BH

SHT 2 OF 3

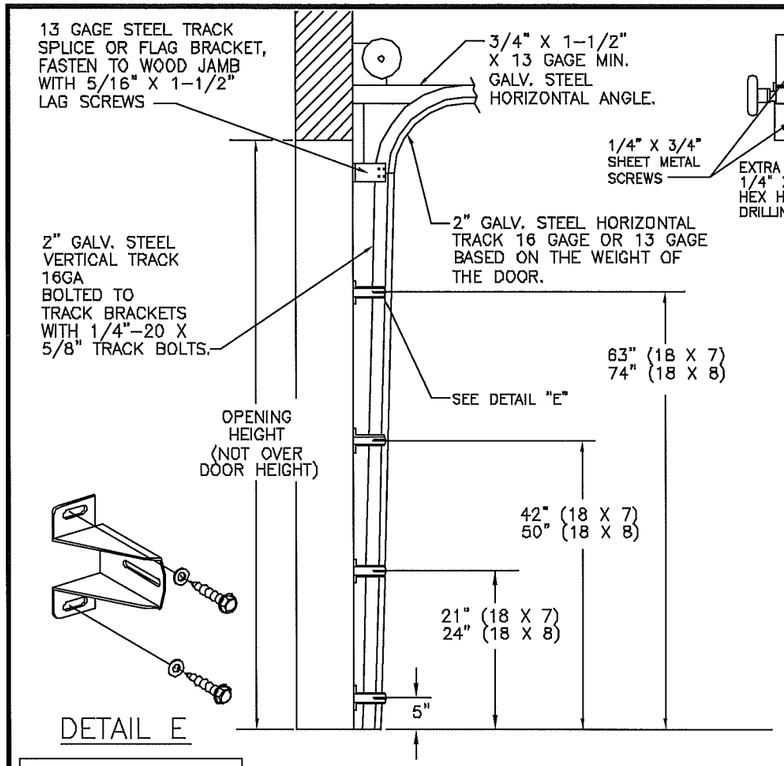

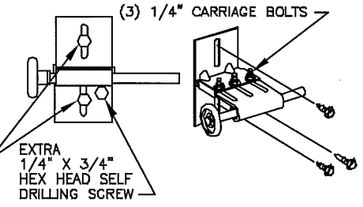

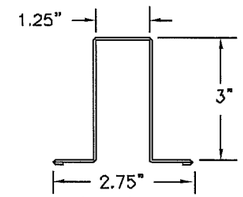

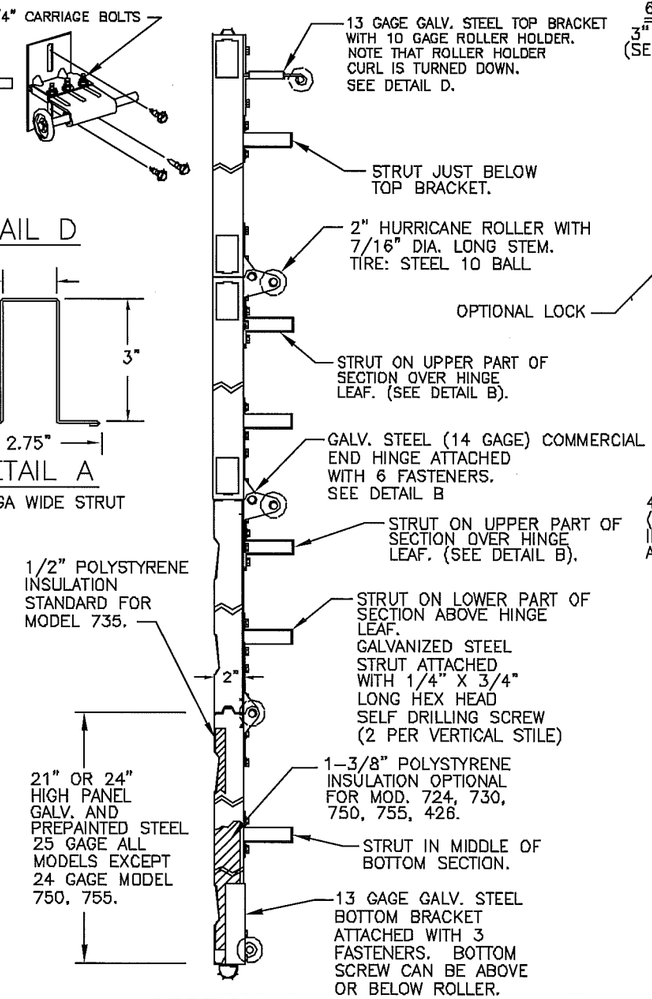

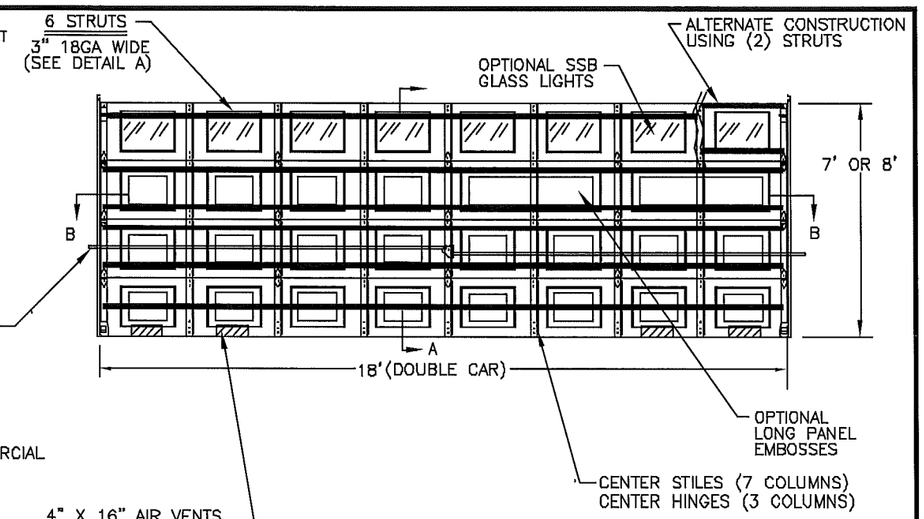

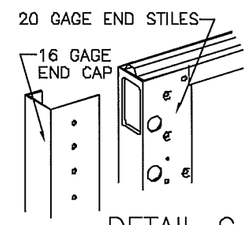

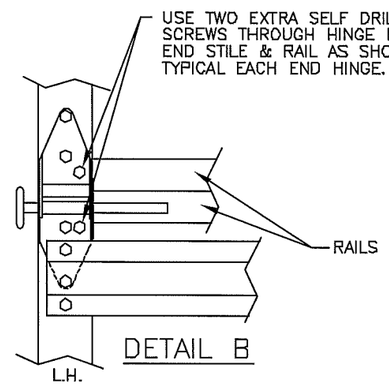

NOTE: DOOR MUST BE INSTALLED WITH EITHER AN ELECTRIC OPERATOR OR A LOCK (MUST ENGAGE BOTH TRACKS ON DOORS WITH EXTENSION SPRINGS).

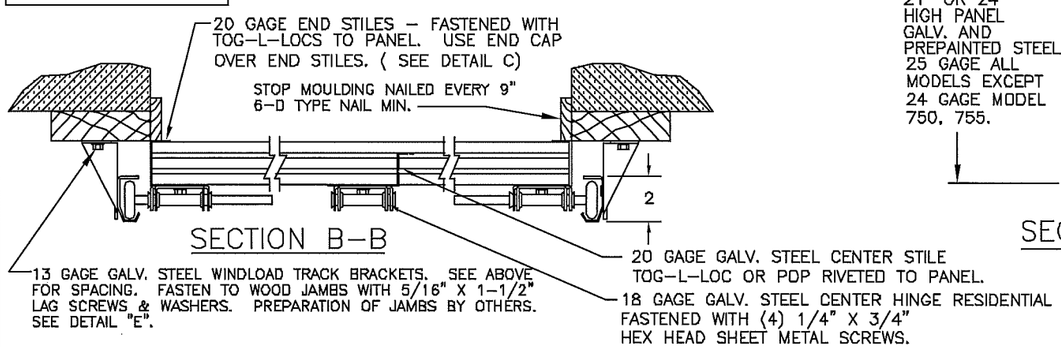

NOTE: GLAZING DOES NOT SATISFY IMPACT DEBRIS REQUIREMENTS IN FBC

P.S.F. TABLE					
DOOR SIZE		DESIGN PRESSURE		TEST PRESSURE	
WIDTH	HEIGHT	POSITIVE	NEGATIVE	POSITIVE	NEGATIVE
18'-0"	7'-0"	+18.7	-20.8	+28.1	-31.2
18'-0"	8'-0"	+18.7	-20.8	+28.1	-31.2

NOTE: ALL NON-DESCRIPTIVE FASTENERS SHOWN TO BE 1/4"-20 X 5/8" HEX BOLTS & NUTS OR 1/4" X 3/4" LONG HEX HEAD SHEET METAL SCREWS.

DOORS SHOWN ON THIS DRAWING HAVE BEEN DEMONSTRATED TO WITHSTAND THE PRESSURES LISTED IN THE TABLE ABOVE VIA TESTING TO ANSI/DASMA 108-05.

DETERMINATION OF SUITABILITY FOR SPECIFIC SITES IS THE RESPONSIBILITY OF OTHERS.

John E Scates PE
3121 FAIRGATE DR.
Carrollton, TX 75007
TX-PE 56308-F-2203
FL-PE-51737
(972) 492-9500

Professional Engineer's seal provided only for verification of windload construction details.

STATE OF TEXAS
JOHN E. SCATES
56308
REGISTERED PROFESSIONAL ENGINEER

John E Scates
6/24/13

REV.	E.C.N.	DATE:	APPROV.
C	REV LOGO & ADDRESS	1/28/13	
B	———	12/15/11	RLB
A	2866	3/10/08	RLB
	2848	11/1/07	RLB

18' X 7'

18' X 8'

FL 15080

WINDSOR DOOR

5800 SCOTT HAMILTON DR.
LITTLE ROCK, AR 72209
(501) 562-1872

MODELS: 724, 426, 730, 735, 750, 755

PART NAME: WINDLOAD RESIDENTIAL PAN DOOR W1 B

TOLERANCE: FRAC. ± 1/64" DEC. ± .015 ANG. ± 1°

NEXT LEVEL

DATE: 11/1/07

DWG. NO. 99-B-079

SCALE: NONE

PLOT SCALE

DRN. BY: BH

SHT 3 OF 3