ATTACHMENT OF JAMB TO SUPPORTING STRUCTURE

WOOD JAMBS SHALL BE SPRUCE-PINE-FIR (SPF) OR BETTER. TO ATTACH JAMBS TO SPRUCE PINE FIR, SOUTHERN YELLOW PINE, CONCRETE, BRICK OR BLOCK WALLS USE LAG SCREWS OR CONCRETE ANCHORS WITH SIZE, SPACING, AND EMBEDMENT AS SHOWN IN THE TABLE BELOW.

SPACING IN CHART IS MAXIMUM VALUE. INSTALL FIRST FASTENER AS SHOWN IN DIAGRAM AND SPACE FASTENERS ACCORDING TO CHART WITH TOP FASTENER WITHIN 6" FROM TOP OF JAMB. SPACING SHOULD NOT EXCEED 24".

NOTE: INTERIOR GYPSUM BOARD LOCATED BETWEEN THE 2 X 6 WOOD BUCK AND THE WALL FRAMING MEMBERS IS PERMISSIBLE PROVIDED LONGER FASTENERS ARE USED TO ACHIEVE THE SHOWN EMBEDMENT INTO THE SUPPORTING STRUCTURE.

DOOR WIDTH (FT)	MAX. POSITIVE PRESSURE (PSF)	1/4" TAPCON SELF-TAP CONCRETE ANCHOR (NOTE 1) 1-1/2" EMBEDMENT MIN. 2000 PSI CONCRETE	1/4" TAPCON SELF-TAP CONCRETE ANCHOR (NOTE 1) 1-1/4" EMBEDMENT GROUT FILLED CMU BLOCK	3/8" SLEEVE ANCHOR (NOTE 2) SIMPSON STRONG-TIE 1-1/2" EMBEDMENT THRU SOUTHERN YEL. PINE MIN. 2000 PSI CONCRETE	3/8" SLEEVE ANCHOR (NOTE 2) SIMPSON STRONG-TIE 1-1/2" EMBEDMENT THRU SPRUCE- PINE-FIR MIN. 2000 PSI CONCRETE	3/8" WEDGE ANCHOR (NOTE 2) SIMPSON STRONG-TIE 1-1/2" EMBEDMENT THRU SOUTHERN YEL. PINE MIN. 2000 PSI CONCRETE	3/8" WEDGE ANCHOR (NOTE 2) SIMPSON STRONG-TIE 1-1/2" EMBEDMENT THRU SPRUCE- PINE-FIR MIN. 2000 PSI CONCRETE	3/8" X 3" WOOD LAG SCREW (NOTE 3) 1-1/2" EMBEDMENT SOUTHERN YELLOW PINE	3/8" X 3" WOOD LAG SCREW (NOTE 3) 1-1/2" EMBEDMENT SPRUCE- PINE-FIR
		MAXIMUM SPACING (INCHES)							
9	30	24	14	24	24	24	24	24	24
9	35	21	12	24	21	24	21	24	24
9	45	17	9	20	16	22	16	24	23
9	50	15	8	18	15	19	15	24	21
9	60	12	7	15	12	16	12	24	17
16	25	17	9	20	16	22	16	24	23
16	30	14	8	17	14	18	14	24	19
16	35	12	7	14	12	16	12	24	17
16	45	9	N/A	11	9	12	9	19	13
16	50	8	N/A	10	8	11	8	17	12
16	60	7	N/A	8	7	9	7	14	10
18	30	12	7	15	12	16	12	24	17
18	40	9	N/A	11	9	12	9	19	13
18	50	7	N/A	9	7	10	7	15	10
18	60	6	N/A	7	6	8	6	13	9

NOTE 1. USE WITH MINIMUM 1" O. D. WASHER; MINIMUM EDGE DISTANCE OF 2-1/2".

NOTE 2. USE WITH MINIMUM 7/8" O.D. WASHER; MINIMUM EDGE DISTANCE OF 3".

NOTE 3. USE WITH MINIMUM 1-1/8" O.D. WASHER; MINIMUM EDGE DISTANCE OF 1-1/2".

SPRING PAD CONNECTION IS NOT INCLUDED.

John E. Scates PE
3121 FAIRGATE DR.
CARROLLTON, TX 75007
TX-PE 56308-F-2203
FL-PE-51737
(972) 492-9500

JOHN E. SCATES 56308

John E. Scates
2/1/13

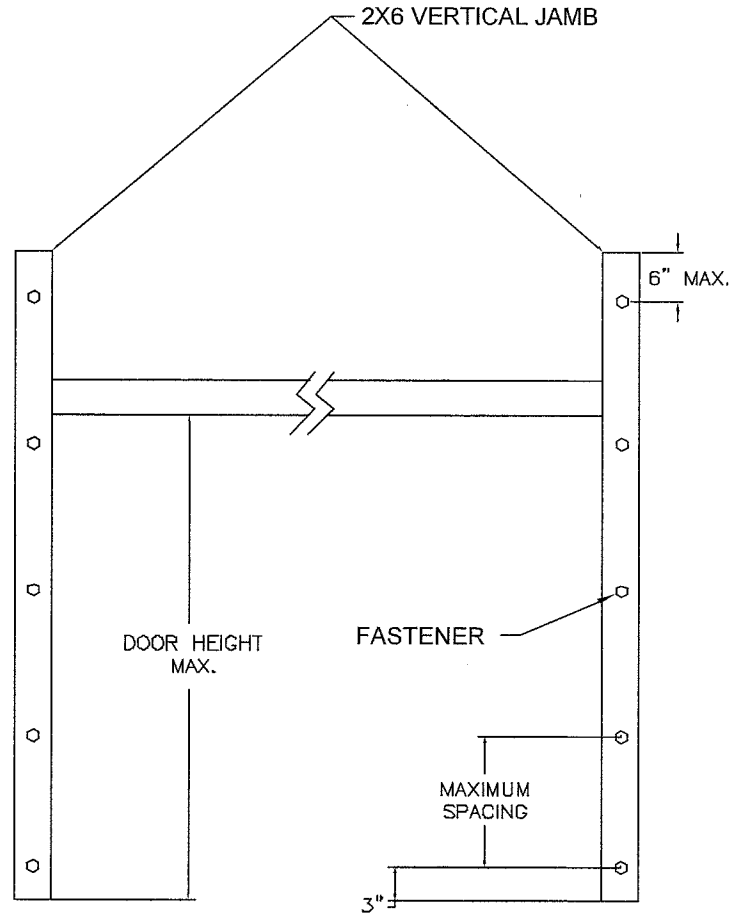

REV.	E.C.N.	CHANGE	DATE
A		REV LOGO & ADDRESS	1/28/13
-	2866	RELEASE DRAWING	3-5-08

WINDSOR DOOR
5800 SCOTT HAMILTON DR.
LITTLE ROCK, AR 72209
(501) 562-1872

PART NAME: JAMB ATTACHMENT SCHEDULE

PART NUMBER: REF. DRAWING

MATERIAL: N/A

TOLERANCE: FRAC.± .XXX ± .XX ± ANG. ±

CHANGED BY: RLB

APPROVED BY: RLB

DRAWING NUMBER: 99-A-090

SHEET 1 OF 2

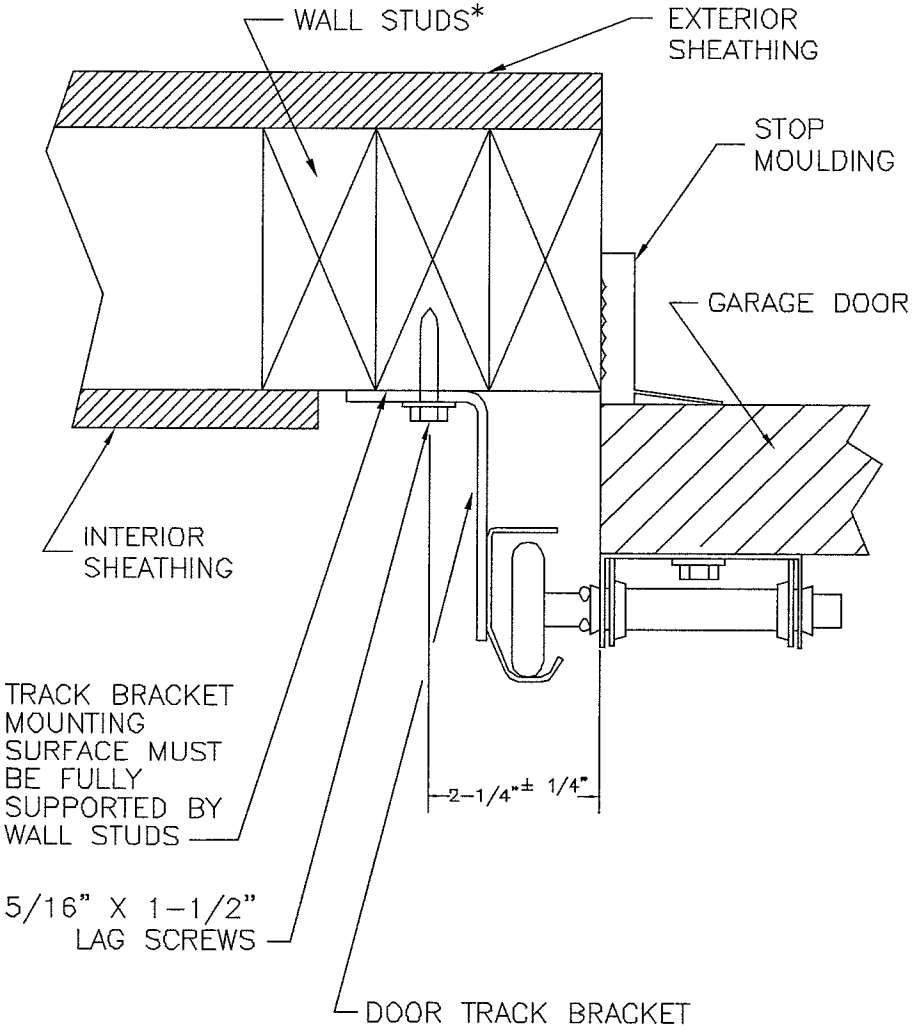

ALTERNATE ATTACHMENT OF DOOR BRACKETS DIRECT TO WOOD WALL FRAMING.

*NOTE: WALL STUDS TO BE SPRUCE-PINE-FIR (SPF), SOUTHERN YELLOW PINE OR BETTER WITH NO KNOTS AT SCREWS AND NO FINGER JOINTS. (WALL FRAMING SHOWN IS FOR ILLUSTRATION PURPOSES ONLY. ACTUAL FRAMING MUST COMPLY WITH BUILDING CODE REQUIREMENTS.)

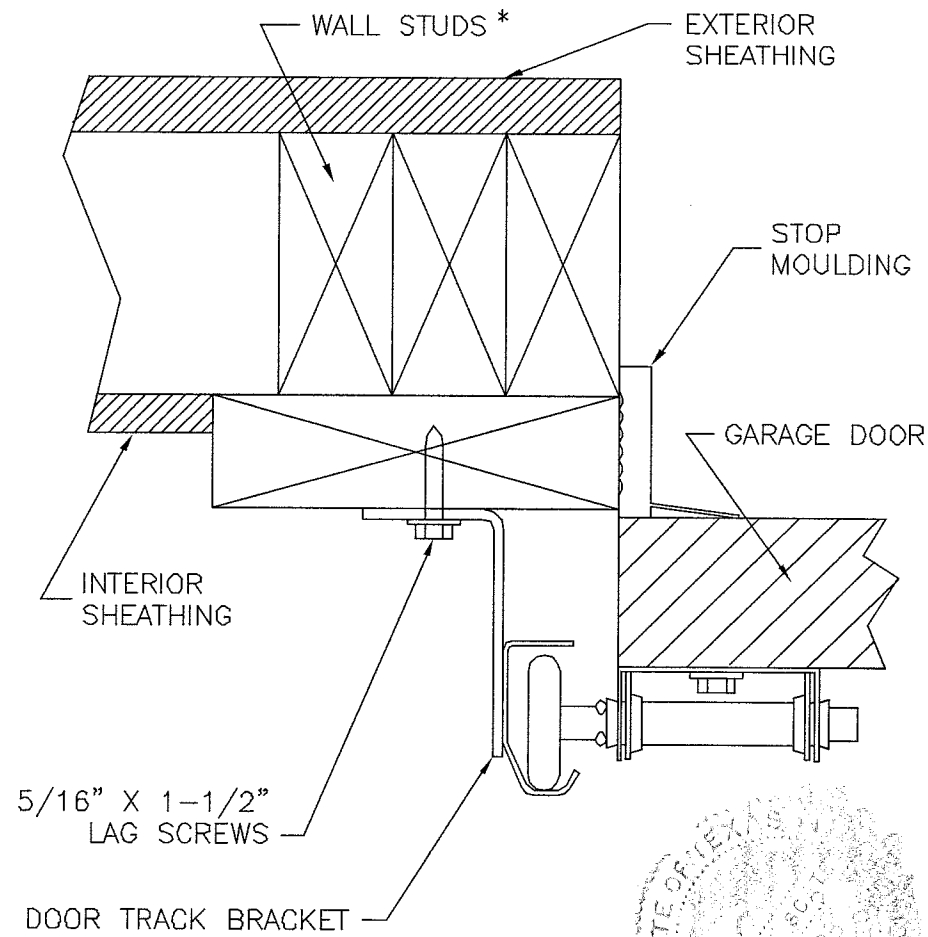

John E. Scott
2/1/13

ATTACHMENT OF DOOR BRACKETS TO 2" X 6" WOOD JAMB.

REV.	E.C.N.	CHANGE	DATE
A		REV LOGO & ADDRESS	1/28/13
-	2866	RELEASE DRAWING	3-5-08

WINDSOR DOOR
5800 SCOTT HAMILTON DR. LITTLE ROCK, AR 72209 (501) 562-1872

PART NAME: ATTACHMENT OF GARAGE DOOR BRACKETS TO WOOD WALL

PART NUMBER: REF. DRAWING

MATERIAL:

TOLERANCE: FRAC. ± 1/32" .XXX ± .015 .XX ± .032 ANG. ± 1°

CHANGED BY: RLB

APPROVED BY: RLB

DRAWING NUMBER: 99-A-90

SHEET 2 OF 2