REVISIONS			
REV	DESCRIPTION	DATE	APPROVAL
---	DRAWING RELEASE	11-14-02	DM
A	NOTE REVISIONS	4-16-04	DM
B	NOTE REVISIONS	6-17-09	CS
C	RE-TEST 9-26-13	10-24-13	CS

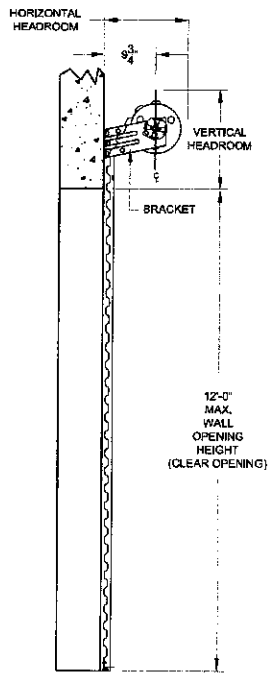

SIDE VIEW

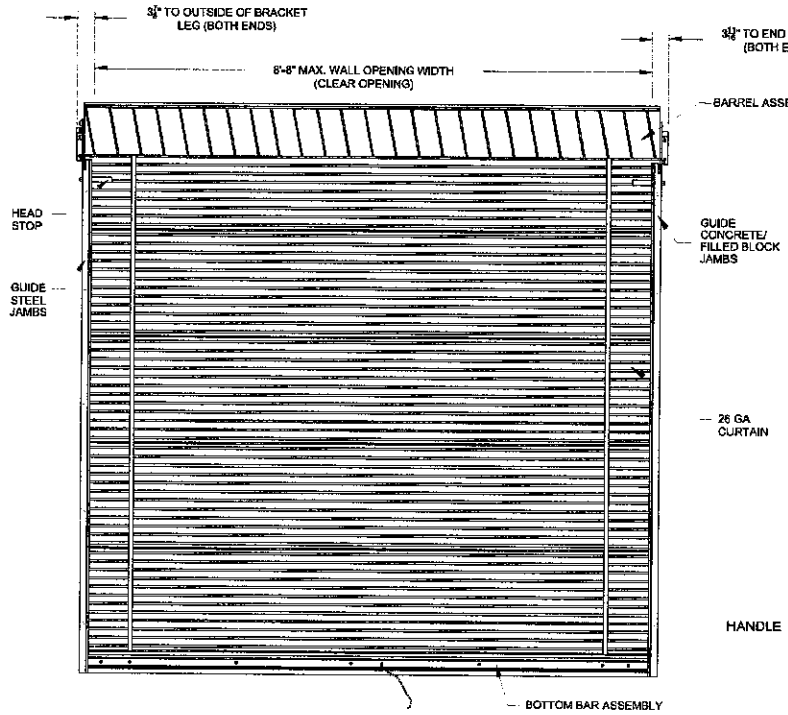

INSIDE ELEVATION

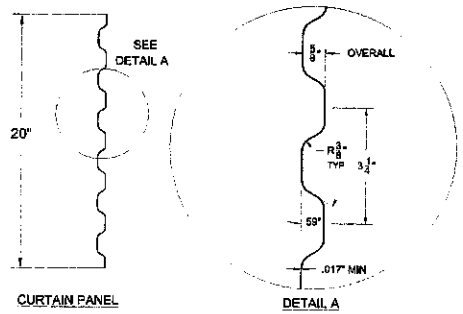

CURTAIN PANEL

DETAIL A

ASTM A653 GR80 - ZINC COATED STEEL.
PRE-PAINTED WITH FULL COAT OF PRIMER AND BAKED SILICONIZED POLYESTER FINISH COAT

26 GA CURTAIN DETAIL

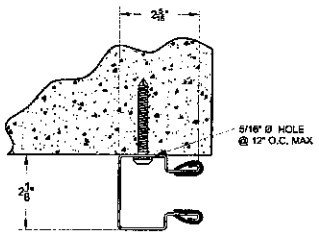

CONCRETE/FILLED BLOCK JAMBS
USING 5/16" X 2-1/4" TAPCON XL

ALL COMPONENTS SHALL BE ASTM A653 STEEL W/MIN FY = 33 KSI. GALVIANIZED PER ASTM A653 G90

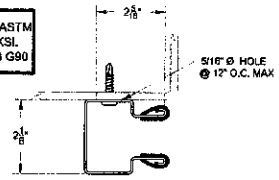

STEEL JAMBS
USING #12-14 X 1" TEKS PANCAKE HEAD

16 GA (0.063) GUIDE MOUNTING DETAIL

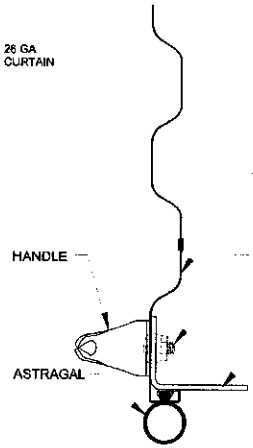

24 GA. (0.022") GALV. STEEL BOTTOM BAR ASTM A653 W/MIN. FY = 33 KSI

DOUBLE 1/4" Ø THRU BOLT WITH LOCKING NUT LOCATED AT EACH END AND MIDDLE OF ANGLE. INTERMEDIATE SINGLE BOLT LOCATED 24"MAX O.C.

2" X 1-1/2" X 0.105" GALV. STEEL ANGLE ASTM A653 W/MIN. FY = 33 KSI CONTINUOUS FULL CURTAIN WIDTH

BOTTOM BAR ASSEMBLY

OPENING HEIGHT	VERTICAL HEADROOM	HORIZONTAL HEADROOM
THRU 7'-4"	15-1/2"	17-1/2"
OVER 7'-4" THRU 8'-8"	16"	18"
OVER 8'-8" THRU 10'-0"	17"	18-1/4"

HEADROOM REQUIRED

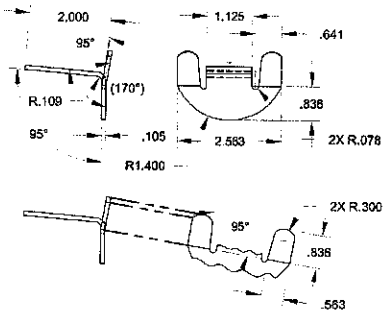

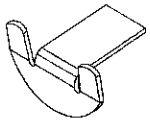

WINDLOCK
GALV. STEEL
ASTM A653
WITH MIN.
FY=33KSI

THESE CONFIDENTIAL DOCUMENTS SUBMITTED BY JANUS CONTAIN INFORMATION OF A PROPRIETARY NATURE AND MAY NOT BE REPRODUCED OR USED TO MANUFACTURE ANYTHING IN PART OR IN WHOLE FOR ANY PURPOSE OTHER THAN THAT WHICH IS NECESSARY FOR PREPARATION OF BIDS OR ENGINEERING WITHOUT THE EXPRESS PERMISSION OF JANUS WHICH MAY RECALL DOCUMENTS AT ANY TIME.

UNLESS OTHERWISE SPECIFIED DIMENSIONS ARE IN INCHES AND TOLERANCES ARE:

DECIMAL	FRACTIONS	ANGLES	HOLE DIAMETERS
.XX ±.030 .XXX ±.005	± 1/16	± 0° 30'	UNDER 0.251 +.004 -.003 0.251 to 0.500 +.008 -.003 OVER 0.500 +.008 -.003

PART NUMBER:		
MATERIAL:		
APPLIED FINISH:		
UNIT OF MEASURE:		
APPROVALS		DATE
DRAWN:	BECKY NELSON	11-14-02
CHECKED:	DON MILLS	11-14-02
APPROVED:	DON MILLS	11-14-02

JANUS INTERNATIONAL CORPORATION
135 JANUS INTERNATIONAL BLVD. TEMPLE, GA 30179-4435
770-562-2850/Fax 770-562-2264
© 2013 Janus International Corporation All Rights Reserved

CERTIFIED WIND LOAD RATED
26 GA SERIES 750 DOOR ASSEMBLY
MAX. SIZE: 8'-8" X 12'-0"

SIZE	DRAWING NUMBER:	REV:
B	T1002	C

SCALE: NONE SHEET: 1 OF: 2

STATE OF TEXAS
JOSEPH H. DIXON, JR.
18627
LICENSED
PROFESSIONAL ENGINEER
12/11/13

REVISIONS			
REV	DESCRIPTION	DATE	APPROVAL
—	DRAWING RELEASE	11-14-02	DM
A	NOTE REVISIONS	4-16-04	DM
B	NOTE REVISIONS	6-17-09	CS
C	RE-TEST 9-26-13	10-24-13	CS

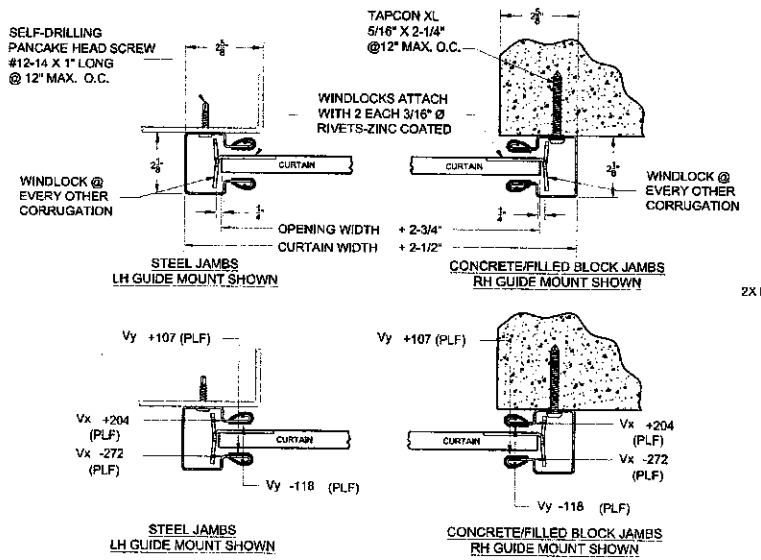

SUPERIMPOSED LOAD DIAGRAM

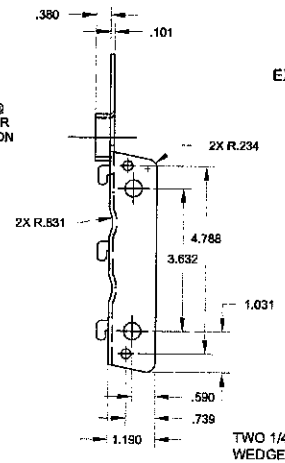

REAR VIEW

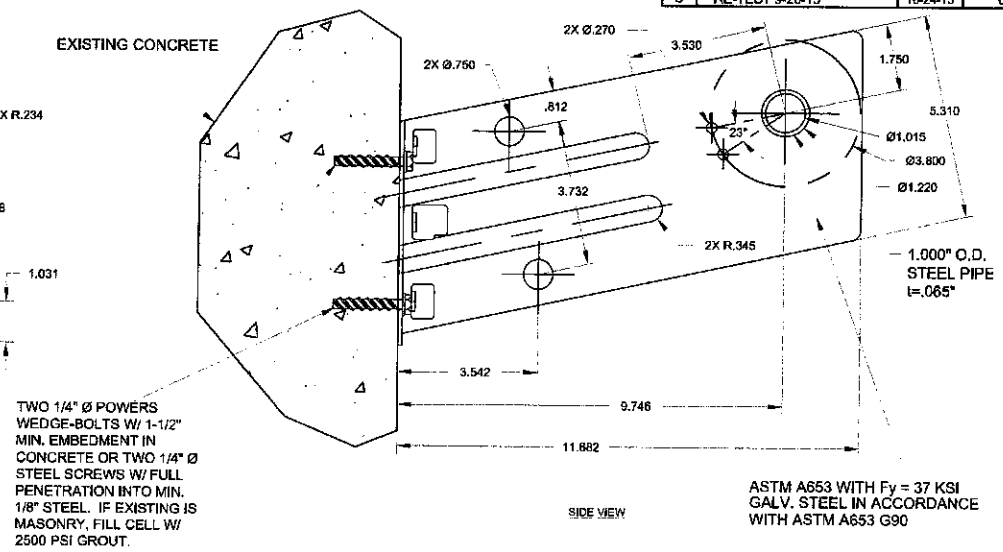

SIDE VIEW

ASTM A653 WITH Fy = 37 KSI GALV. STEEL IN ACCORDANCE WITH ASTM A653 G90

DOOR MOUNTING BRACKET DETAIL

GENERAL NOTES

1. THIS ROLL-UP DOOR SYSTEM IS DESIGNED IN ACCORDANCE WITH THE FLORIDA BUILDING CODE.
2. THIS ROLL-UP DOOR HAS BEEN TESTED IN ACCORDANCE WITH ASTM E-330 AND COMPLIES WITH ANSI/DASMA 108.

   DESIGN LOAD = $^{+24.4}_{-27.0}$ PSF
3. WIND LOADS FOR BUILDING OPENINGS SHALL BE DETERMINED BY A PROFESSIONAL ENGINEER USING APPROPRIATE WIND SPEED AND DESIGN CRITERIA. THIS DOOR MAY BE USED WHERE THE DESIGN LOAD MEETS OR EXCEEDS THE DESIGN LOAD FOR THE BUILDING OPENING.
4. SUPERIMPOSED LOADS ON THE JAMBS FROM THIS DOOR ARE DESIGNED AS Vx AND Vy HEREIN. CONTRACTORS SHALL HAVE BUILDING ENGINEER VERIFY ADEQUACY OF BUILDING STRUCTURE TO RESIST SUPERIMPOSED LOADS Vx, Vy, AND BRACKET LOADS SHOWN.
5. ALL WELDING SHALL BE PERFORMED BY QUALIFIED WELDERS IN ACCORDANCE WITH A.W.S. SPECIFICATIONS, LATEST EDITION. ALL WELDING ELECTRODES SHALL CONFORM TO A.W.S. A5.1 GRADE E-70.
6. DOORS SHALL BE PROVIDED WITH LOCK MECHANISMS AT THE OPTION OF THE OWNER.
7. ALL BOLTS AND WASHERS SHALL BE GALVANIZED OR STAINLESS STEEL WITH A MINIMUM TENSILE STRENGTH OF 60 KSI.
8. DESIGN BASED ON ELEMENT MATERIALS TECHNOLOGY TEST REPORT NO. ESP014073P-2.
9. ANCHOR NOTES:
   A. EMBEDMENT LENGTH DOES NOT INCLUDE STUCCO FINISH.
   B. FOR HOLLOW MASONRY, FILL ALL CELLS @ ANCHOR WITH 2500 PSI GROUT.
   C. ANCHORS SHALL BE INSTALLED IN ACCORDANCE WITH MANUFACTURER'S SPECIFICATIONS.
10. DOOR OPERATION TYPED TO BE PUSH-UP.
11. GUIDE TO JAMB ATTACHMENT FASTENERS BEGIN 4" FROM FLOOR AND END 3-1/2" BELOW TOP OF WALL OPENING.
12. TEST DOOR WALL OPENING SIZE: 8'-8" X 8'-0"

THESE CONFIDENTIAL DOCUMENTS SUBMITTED BY JANUS CONTAIN INFORMATION OF A PROPRIETARY NATURE AND MAY NOT BE REPRODUCED OR USED TO MANUFACTURE ANYTHING IN PART OR IN WHOLE FOR ANY PURPOSE OTHER THAN THAT WHICH IS NECESSARY FOR PREPARATION OF BIDS OF ENGINEERING WITHOUT THE EXPRESS PERMISSION OF JANUS WHICH MAY RECALL DOCUMENTS AT ANY TIME.

UNLESS OTHERWISE SPECIFIED DIMENSIONS ARE IN INCHES AND TOLERANCES ARE:

DECIMAL	FRACTIONS	ANGLES	HOLE DIAMETERS
[illegible]	± 1/16	± 0° 30'	UNDER 0.251 $^{+.004}_{-.003}$
			0.251 to 0.500 $^{+.006}_{-.003}$
			OVER 0.500 $^{+.008}_{-.003}$

PART NUMBER:		
MATERIAL:		
APPLIED FINISH:		
UNIT OF MEASURE:		
APPROVALS		DATE
DRAWN:	BECKY NELSON	11-14-02
CHECKED:	DON MILLS	11-14-02
APPROVED:	DON MILLS	11-14-02

JANUS INTERNATIONAL CORPORATION
135 JANUS INTERNATIONAL BLVD. TEMPLE, GA 30179-4435
770-562-2850/Fax 770-562-2264
© 2013 Janus International Corporation All Rights Reserved

CERTIFIED WIND LOAD RATED
26 GA SERIES 750 DOOR ASSEMBLY
MAX. SIZE: 8'-8" X 12'-0"

SIZE	DRAWING NUMBER:	REV:
B	T1002	C
SCALE: NONE	SHEET: 2 OF: 2	

STATE OF TEXAS
JOSEPH H. DIXON, JR.
18627
LICENSED
PROFESSIONAL ENGINEER
12/11/13