NOTES:

1. SHORT GLAZED PANEL OPTION – .090" MINIMUM SSB GLAZING IN MOLDED FRAMES SCREWED TOGETHER WITH A MINIMUM OF (6) #8x1" SCREWS INSTALLED IN TOP OR INTERMEDIATE SECTION (WITH OR WITHOUT DECORATIVE INSERTS) MEETS UNIFORM STATIC DESIGN PRESSURES SHOWN ON THIS DRAWING. GLAZING SHALL HAVE A MAXIMUM HEIGHT OF 13.75" AND A MAXIMUM LENGTH OF 16.75". GLAZING IS NOT IMPACT RESISTANT AND DOES NOT MEET THE REQUIREMENTS FOR WIND-BORNE DEBRIS REGIONS.

2. LONG GLAZED PANEL OPTION – NOT AVAILABLE WITH THIS OPTION CODE.

3. VINYL OR WOOD DOOR STOP NAILED A MAXIMUM OF 6" O.C. MUST OVERLAP TOP AND BOTH ENDS OF PANELS MINIMUM 7/16" TO MEET NEGATIVE PRESSURES.

4. KEY LOCK, SLIDE LOCKS, OR OPERATOR REQUIRED.

5. SECTION SHALL BE CONSTRUCTED WITH FOAMED IN PLACE POLYURETHANE FOAM INSULATION CHEMICALLY BONDED TO 30 GA MINIMUM FACER STEEL AND A POLYLAMINATE OR 32 GA STEEL BACKER. END CAP TO HAVE A MINIMUM 1.4" DEPTH.

6. THE DESIGN OF THE SUPPORTING STRUCTURAL ELEMENTS SHALL BE THE RESPONSIBILITY OF THE PROFESSIONAL OF RECORD FOR THE BUILDING OR STRUCTURE AND IN ACCORDANCE WITH CURRENT BUILDING CODES FOR THE LOADS LISTED ON THIS DRAWING.

7. DOOR JAMB TO BE MINIMUM 2x6 STRUCTURAL GRADE LUMBER. REFER TO JAMB CONNECTION SUPPLEMENT FOR ATTACHMENT TO SUPPORTING STRUCTURE.

8. LOUVER OPTION – .040" MINIMUM LOUVERS IN MOLDED FRAMES SCREWED TOGETHER WITH A MINIMUM OF (6) #8x1" SCREWS INSTALLED IN THE BOTTOM SECTION. LOUVERS ARE NOT IMPACT RESISTANT AND DO NOT MEET THE REQUIREMENTS FOR WIND-BORNE DEBRIS REGIONS. LOUVERED SECTION REQUIRES OPERATOR STILE TO BE FACTORY INSTALLED AT THE CENTERLINE OF THE DOOR.

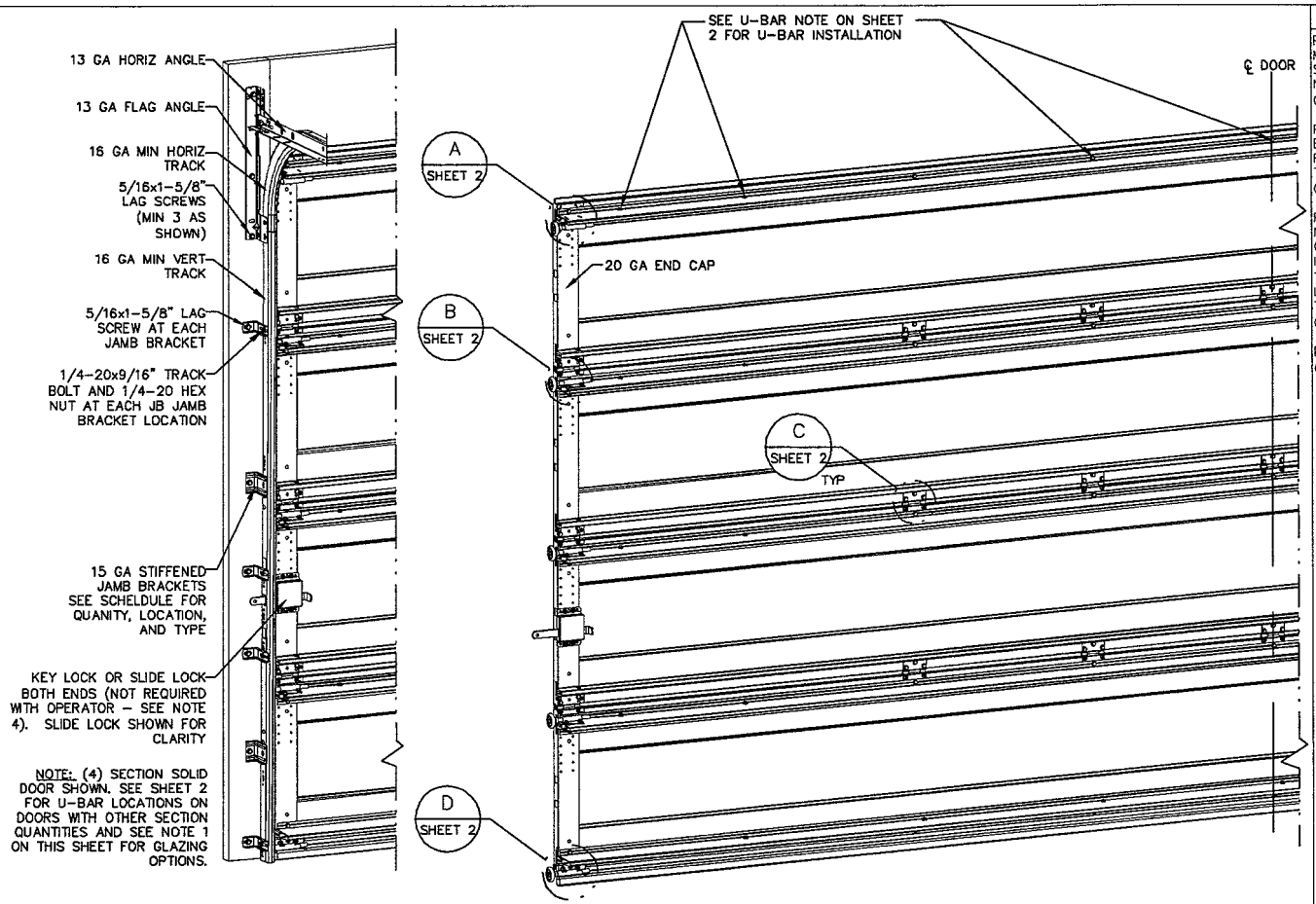

REVISIONS

P1 ADDED MODEL 6100. MODIFIED NOTE 8 TO STATE THAT LOUVERS ARE NOT IMPACT RESISTANT. GRT 6/6/07

P2 MODIFED JAMB BRACKET SCHEDULE FOR FAT OPTION. ADDED LHR TRACK DETAIL SHEET 2. GRT 4/17/08

P3 ADDED TEXAS LICENSE NUMBER TO TITLE BLOCK. CHANGED LOUVER NOTE. INCREASED MAX HEIGHT TO 8'-9". ADDED HIGH LIFT AND ROOF PITCH TRACK NOTE. GRT 4/29/09

P4 UPDATED TITLE BLOCK GRT 5/4/10

SUPERIMPOSED DESIGN PRESSURE LOADS ON SUPPORTING STRUCTURE

MAX DOOR WIDTH	DOOR HEIGHT	UNIFORM LOAD EACH JAMB (PLF)
18'-0"	ALL	+166.5/-186.3

JAMB BRACKET SCHEDULE

DOOR HEIGHT	NO. OF SECTIONS	NO. OF JAMB BRACKETS (EACH JAMB)	TRACK TYPE	LOCATION OF CENTERLINE OF JAMB BRACKETS MEASURED FROM BOTTOM OF TRACK (ALL DIMENSIONS ± 2")
7'-0"	4	6	QI	2" (JB), 13" (QI), 25-1/2" (JB), 34" (JB), 45-1/4" (QI), 63" (JB)
7'-0"	4	6	FAT	2" (JB), 10" (JB), 21-3/4" (JB), 29-3/4" (JB), 42" (JB), 63-1/4" (JB)
8'-0"	5	8	QI	2" (JB), 13" (QI), 23" (JB), 34" (JB), 47-1/4" (QI), 58" (JB), 67" (QI), 75" (JB)
8'-0"	5	8	FAT	2" (JB), 10" (JB), 21-3/4" (JB), 29-3/4" (JB), 48" (JB), 57-1/4" (JB), 66" (JB), 75-1/2" (JB)
> 8'-0"/HIGH LIFT/ROOF PITCH				SEE NOTE BELOW

NOTE:
(JB) FOLLOWING DIMENSION DENOTES SLOTTED JAMB BRACKET ATTACHED TO TRACK WITH 1/4-20x9/16" TRACK BOLT AND NUT.
(QI) FOLLOWING DIMENSION DENOTES QUICK INSTALL JAMB BRACKET INSTALLED IN BUTTERFLY SLOT. NO ADDITIONAL HARDWARE NEEDED TO ATTACH TO TRACK.
ALL DOORS WITH HIGH LIFT, ROOF PITCH, AND/OR GREATER THAN 8' IN HEIGHT REQUIRE USE OF CONTINUOUS WALL ANGLE. SEE SUPPLEMENT TRACK CHART FOR DETAILS.

STATE OF TEXAS
JOHN E. SCATES
56308

John E Scates 9/2/10

JOHN E. SCATES, PE
3121 FAIRGATE DR.
CARROLLTON, TX 75007
FL PE 51737 TX PE 56308/F2203

PROFESSIONAL ENGINEER'S SEAL PROVIDED ONLY FOR VERIFICATION OF WINDLOAD CONSTRUCTION DETAILS.

Wayne® Dalton

A DIVISION OF OVERHEAD DOOR CORP
3395 ADDISON DRIVE
PENSACOLA, FLORIDA 32514
(850) 474-9890

STATIC PRESSURE RATINGS		APPROVED SIZES		SCALE: N.T.S.		SIZE: A
DESIGN (PSF):	+18.50/-20.70	MAX WIDTH:	18'-0"		DATE	NAME
TEST (PSF):	+27.75/-31.05	MAX HEIGHT:	8'-9"	DRAWN	3/8/06	GRT
IMPACT/CYCLIC RATED (YES/NO):	NO	MAX SECTION HEIGHT:	21"	CHECKED	4/6/06	MRB

MODELS 5140/6100/9400/9600

SHEET 1 OF 2

WINDLOAD SPECIFICATION OPTION CODE 0608

DRAWING PART NO. 319034

REV. P4

13 GA ADJUSTABLE TOP FIXTURE ATTACHED TO PRE-PUNCHED HOLES IN BOTTOM OF U-BAR WITH (2) 1/4-14x5/8" CRIMPTITE SCREWS

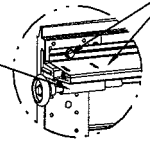

DETAIL A

PLACE U-BAR OVER INTEGRAL RIB WITH THE (8) PRE-PUNCHED HOLES EACH END FACING UPWARD AND ATTACH THRU END CAP AT EACH END WITH (2) 1/4-14x7/8" SELF DRILLING CRIMPTITE SCREWS FOR STANDARD TRACK AND (3) 1/4-14x7/8" SELF DRILLING CRIMPTITE SCREWS FOR LOW HEADROOM TRACK (2 OF WHICH ARE USED TO ATTACHED THE TOP BRACKET AS SHOWN).

13 GA ADJUSTABLE TOP FIXTURE

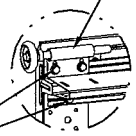

LOW HEADROOM TRACK
DETAIL A

13 GA ROLLER SLIDE ATTACHED TO PRE-PUNCHED HOLES IN TOP OF U-BAR WITH (2) 1/4-14x5/8" CRIMPTITE SCREWS. USE VIEWING HOLE IN SLIDE TO ENSURE PROPER ALIGNMENT OF ROLLERS

15 GA HINGE ATTACHED WITH (4) 1/4-14x5/8" CRIMPTITE SCREWS (2 OF WHICH ARE FACTORY ATTACHED)

2" NYLON STORMGARD ROLLER WITH 4-1/2" STEM

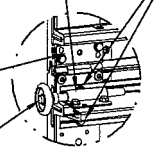

DETAIL B

PLACE U-BAR OVER INTEGRAL RIB WITH THE (8) PRE-PUNCHED HOLES EACH END FACING UPWARD AND ATTACH THRU END CAP AT EACH END WITH (2) 1/4-14x7/8" SELF DRILLING CRIMPTITE SCREWS
EXCEPTION: U-BAR PLACED OVER TOP RIB ON THE BOTTOM SECTION SHALL ONLY BE ATTACHED THRU END CAP AT EACH END WITH (1) 1/4-14x7/8" SELF DRILLING CRIMPTITE SCREW LOCATED ON THE BOTTOM FLANGE OF THE U-BAR
NOTE: DUE TO CLEARANCES REQUIRED TO INSTALL SCREWS AT THE ENDS OF THE U-BARS, ALL U-BARS SHALL BE INSTALLED ON SECTIONS PRIOR TO INSTALLING ROLLER SLIDES AND TOP FIXTURE ON THE U-BARS. SEE ATTACHMENT NOTES ON THIS SHEET.

18 GA HINGE ATTACHED WITH (6) 1/4-20x5/8" CRIMPTITE SCREWS (2 OF WHICH ARE FACTORY ATTACHED, 3 OF WHICH ARE FIELD INSTALLED INTO TOP LEAF, AND 1 OF WHICH IS FIELD INSTALLED THRU PRE-PUNCHED HOLE IN U-BAR)

DETAIL C

PLACE U-BAR OVER INTEGRAL RIB AND ATTACH WITH (2) 1/4-20x5/8" CRIMPTITE SCREWS THRU PRE-PUNCHED HOLES AT EACH INTERMEDIATE HINGE LOCATION (1 THRU FLANGE OF U-BAR AND BOTTOM HINGE LEAF AND 1 THRU WEB OF U-BAR AND INTEGRAL RIB OF SECTION)

12 GA BOTTOM BRACKET FACTORY ATTACHED WITH (3) 1/4-14x5/8" CRIMPTITE SCREWS

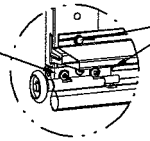

DETAIL D

PLACE U-BAR OVER INTEGRAL RIB WITH NOTCH DOWN TO CLEAR BOTTOM BRACKET AND ATTACH THRU END CAP AT EACH END WITH (1) 1/4-14x7/8" SELF DRILLING CRIMPTITE SCREW AS SHOWN AND USE (1) 1/4-14x7/8" SELF DRILLING CRIMPTITE SCREW ACROSS THE BOTTOM OF THE BOTTOM U-BAR AT EACH PRE-PUNCHED HOLE AT EVERY HINGE LOCATION. USE (1) 1/4-20x5/8" CRIMPTITE SCREW AT ALL OTHER PRE-PUNCHED HOLE LOCATIONS.

(5) SECTION DOORS WITH (6) 3", 18 GA, 80 KSI U-BARS LOCATED OVER INTEGRAL RIBS AS SHOWN

(4) SECTION DOORS WITH (5) 3", 18 GA, 80 KSI U-BARS LOCATED OVER INTEGRAL RIBS AS SHOWN

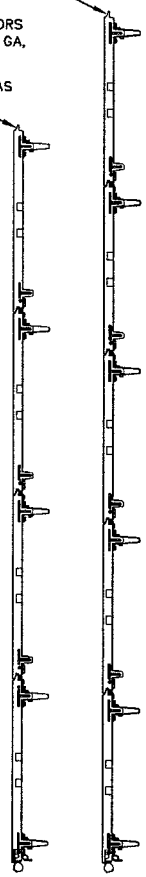

U-BAR ATTACHMENT NOTES

1. ALL U-BARS SHALL BE PLACED OVER INTEGRAL RIBS AND ATTACHED THRU PRE-PUNCHED HOLES WITH (2) 1/4-14x5/8" CRIMPTITE SCREWS AT EACH INTERMEDIATE HINGE LOCATION, (2) 1/4-14x7/8" SELF DRILLING CRIMPTITE SCREWS AT EACH END CAP (EXCEPT BOTH U-BARS ON BOTTOM SECTION – SEE DETAIL B AND D THIS SHEET), (2) 1/4-14x5/8" CRIMPTITE SCREWS APPROXIMATELY MIDWAY BETWEEN END OF DOOR AND INTERMEDIATE HINGE LOCATION, AND (1) 1/4-14x5/8" CRINPTITE SCREW APPROXIMATELY 8" FROM EACH END. THERE SHALL BE A TOTAL OF (20) SCREWS ATTACHING EACH U-BAR EXCEPT BOTH U-BARS ON BOTTOM SECTION SHALL HAVE A TOTAL OF (18) SCREWS EACH.

2. WITH THE EXCEPTION OF THE (8) PRE-PUNCHED HOLES IN THE TOP OF EACH END USED FOR ATTACHMENT OF THE ROLLER SLIDES AND THE (6) PRE-PUNCHED HOLES IN THE BOTTOM OF EACH END USED FOR THE ATTACHMENT OF THE TOP FIXTURE AND UNLESS NOTED OTHERWISE ON THIS SPECIFICATION DRAWING, ALL PRE-PUNCHED HOLES IN ALL U-BARS SHALL BE ATTACHED TO THE DOOR WITH 1/4-14x5/8" CRIMPTITE SCREWS.

3. 18 GA U-BARS SHALL BE STAMPED "46" APPROXIMATELY 8" FROM EACH END.

REVISIONS

P1 ADDED MODEL 6100. MODIFIED NOTE 8 TO STATE THAT LOUVERS ARE NOT IMPACT RESISTANT. GRT 6/6/07

P2 MODIFED JAMB BRACKET SCHEDULE FOR FAT OPTION. ADDED LHR TRACK DETAIL SHEET 2. GRT 4/17/08

P3 ADDED TEXAS LICENSE NUMBER TO TITLE BLOCK. CHANGED LOUVER NOTE. INCREASED MAX HEIGHT TO 8'-9". ADDED HIGH LIFT AND ROOF PITCH TRACK NOTE. GRT 4/29/09

P4 UPDATED TITLE BLOCK GRT 5/4/10

STATE OF TEXAS
JOHN E. SCATES
56308

John E Scates 9/2/10

JOHN E. SCATES, PE
3121 FAIRGATE DR.
CARROLLTON, TX 75007
FL PE 51737 TX PE 56308/F2203

PROFESSIONAL ENGINEER'S SEAL PROVIDED ONLY FOR VERIFICATION OF WINDLOAD CONSTRUCTION DETAILS.

Wayne® Dalton

A DIVISION OF OVERHEAD DOOR CORP
3395 ADDISON DRIVE
PENSACOLA, FLORIDA 32514
(850) 474-9890

STATIC PRESSURE RATINGS		APPROVED SIZES		SCALE: N.T.S.		SIZE: A
DESIGN (PSF):	+18.50/-20.70	MAX WIDTH:	18'-0"		DATE	NAME
TEST (PSF):	+27.75/-31.05	MAX HEIGHT:	8'-9"	DRAWN	3/8/06	GRT
IMPACT/CYCLIC RATED (YES/NO):	NO	MAX SECTION HEIGHT:	21"	CHECKED	4/6/06	MRB

MODELS 5140/6100/9400/9600

SHEET 2 OF 2

WINDLOAD SPECIFICATION OPTION CODE 0608

DRAWING PART NO. 319034

REV. P4