MAX 20'-2" WIDE X 18'-0" HIGH

MODELS AVAILABLE (CLOPAY/ HOLMES/ IDEAL)
MODELS 524, 520/ 224/ C4ST, C0ST
INSULATED MODELS 524S, 520S, 524V/ 224S/ C4SS, C0SS, C4SV

REVISIONS					
REV. NO.	ZONE:	DATE:	ECN NO.	APPVD:	DESCRIPTION
07	–	10/2005	–	–	ADDED ROLLER OPTION
08	–	11/2008	–	–	ADDED MPC, FULL-VISION OPTION.
09	–	02/2012	–	–	UPDATED WINDCODE CHART
10	–	08/2012	–	–	REVISED FOR TDI
11	–	06/2013	–	–	REMOVED ACRYLIC/WIRE GLAZING. SPECIFIED GLAZING DIMENSION.

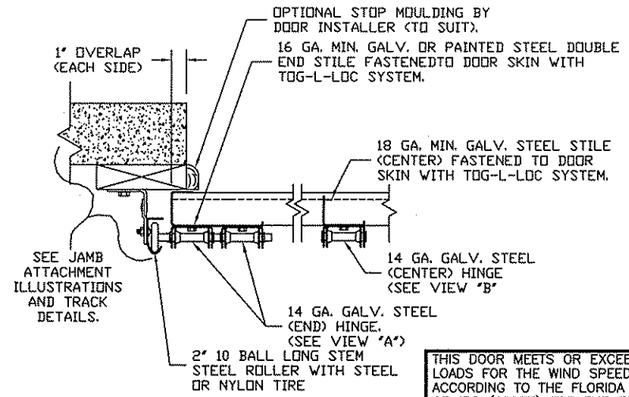

SECTION 2–2

DOOR HEIGHT 'A'	NUMBER OF SECTIONS
UP TO 8'-0"	4
8'-3" THRU 10'-0"	5
10'-3" THRU 12'-0"	6
12'-3" THRU 14'-0"	7
14'-3" THRU 16'-0"	8
16'-3" THRU 18'-0"	9

DOOR WIDTH	NUMBER OF CENTER STILES	NUMBER OF C-CHANNEL STRAPS
16'-3" THRU 16'6"	7	6
16'-7" THRU 20'-2"	9	7

MAX. SECTION HEIGHT: 24"

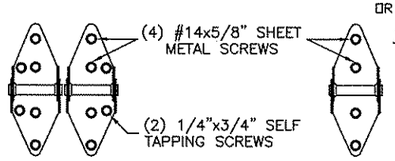

THIS DOOR MEETS OR EXCEEDS THE DESIGN LOADS FOR THE WIND SPEEDS LISTED BELOW ACCORDING TO THE FLORIDA BLDG. CODE OR IBC (ASCE7) FOR THE FOLLOWING CONDITIONS: 1) ENCLOSED BUILDING, 2) DOOR HAS 2' OF WIDTH IN BUILDING'S END ZONE, 3) IMPORTANCE FACTOR OF 1.0, 4) ROOF SLOPE LESS THAN 10', AND 5) 50% SAFETY FACTOR.

WIND SPEED (MPH)	≤ 100	110	110	120
EXPOSURE LEVEL	B or C	B	C	B
MEAN ROOF HEIGHT	30'	30'	25'	30'

THE OPTIONAL GLAZING SHOWN ON THIS DRAWING MEETS THE WIND LOAD REQUIREMENTS OF THE FLORIDA BUILDING CODE OR INTERNATIONAL BUILDING CODE BUT DOES NOT MEET THE IMPACT RESISTANT REQUIREMENT FOR WINDBORNE DEBRIS REGIONS (FBC / IBC CHAPTER 16).

THE DESIGN OF THE SUPPORTING STRUCTURAL ELEMENTS IS THE RESPONSIBILITY OF THE BUILDING ENGINEER OR ARCHITECT OF RECORD.

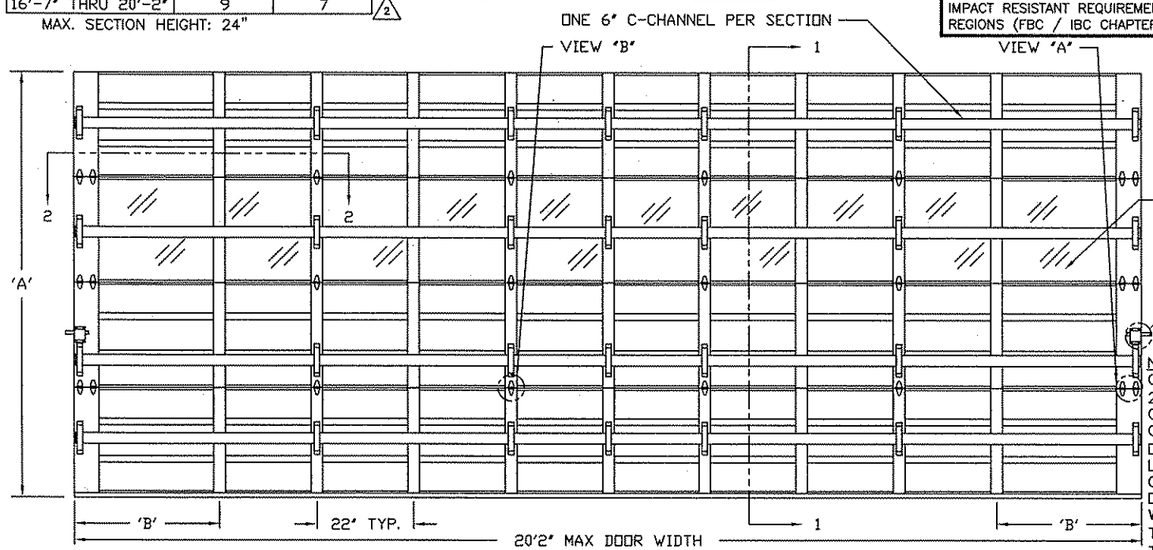

NOTE
CENTER STILES ALWAYS 22" FROM CENTER TO CENTER. FOR ANY GIVEN DOOR WIDTH. DIMENSION 'B' IS THE LEFTOVER DIMENSION ON BOTH ENDS OF THE DOOR. THIS DIMENSION WILL NOT BE GREATER THAN 33" OR LESS THAN 18"

ANCHOR NOTE: FIRST (BOTTOM) ANCHOR STARTING AT NO MORE THAN HALF OF THE MAXIMUM ON-CENTER DISTANCE. HIGHEST ANCHOR INSTALLED AT LEAST AS HIGH AS THE DOOR OPENING.

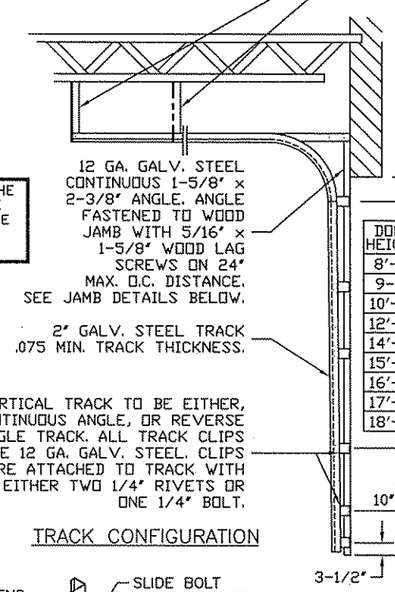

DOOR HEIGHT	"L"
8'-0"	88"
9-0"	100"
10'-0"	112"
12'-0"	136"
14'-0"	160"
15'-0"	172"
16'-0"	184"
17'-0"	194"
18'-0"	204"

NOTE: DOUBLE TRACK LOW HEADROOM, HI-LIFT TRACK, FOLLOW-THE-ROOF TRACK, AND VERTICAL LIFT TRACK ARE AVAILABLE OPTIONS. 3" TRACK ALSO AVAILABLE.

TRACK CONFIGURATION

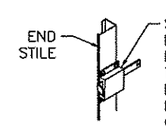

INSIDE SLIDE BOLT LOCK OPTION

SECTIONS ARE 1-7/8" THK PANELS ROLL FORMED OF 24GA. MIN. HOT DIPPED GALVANIZING, ROLL FORMED STEEL.

VIEW "C"

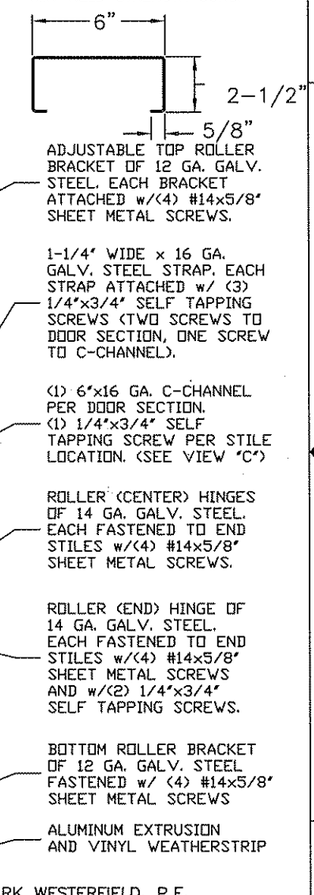

SECTION 1 – 1

MARK WESTERFIELD, P.E.
FLORIDA P.E. #48495,
NC P.E. #23832, TEXAS P.E. #91513

WOOD JAMB ON CONCRETE

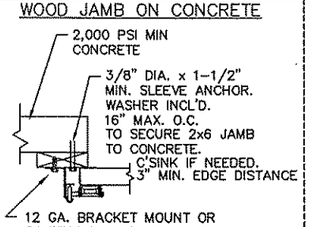

CONCRETE JAMBS

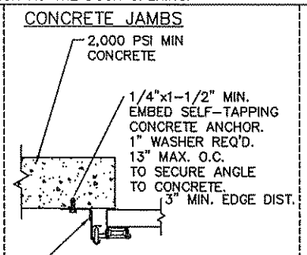

STEEL JAMBS

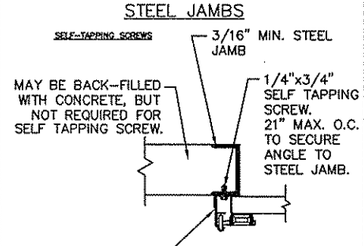

WOOD JAMBS

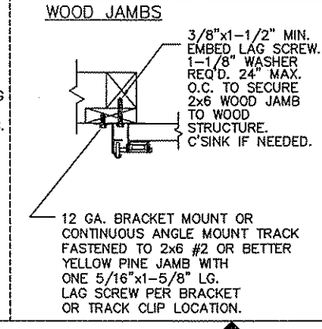

STEEL JAMBS

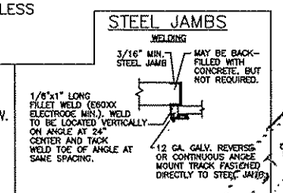

CLOPAY CORP. ALL RIGHTS RESERVED.

Third Angle Projection

Unless Stated Otherwise TOLERANCES are
.0 = ±.031
.00 = ±.015
.000 = ±.005
.0000 = ±.001
Degrees = ±1/2°
Unless Stated Otherwise DIMENSIONS ARE IN INCHES.

DESIGN LOADS: +25 & –25 P.S.F.
TEST LOADS +37.5 & –37.5 P.S.F.

MANUFACTURING PRODUCT CODE: MPC: C-PAN-1E448

CLOPAY WINDLOAD RATING W4

Clopay Building Products Company
8585 Duke Boulevard
Mason, OH 45040 USA
Tel. No. 513-770-4800
Fax No. 513-770-4853

DESCRIPTION: COMMERCIAL RIBBED DOOR, +/– 25 PSF DESIGN LOAD

DRAWN BY: JJM	DATE: 3/28/00	SCALE: NTS	DWG. SIZE B
CHECKED BY: MWW	DATE: 3/00	SHEET 1 OF 1	
DWG. NO.: 102126		VER: IBC	