MAX 16-2" WIDE 18'-0" HIGH

REVISIONS					
REV. NO.	ZONE:	DATE:	ECN NO.	APPVD:	DESCRIPTION
09	–	05/2005	–	MWW	UPDATED CODE REF., SPECIFIED OPTIONAL ACRLYIC.
10	–	11/2005	–	–	ADDED OPTIONAL NYLON TIRE ROLLER
11	–	11/2008	–	–	ADDED MPC, WELDED JAMB ATTACHMENT.
12	–	02/2012	–	–	UPDATED WINDCODE CHART
13	–	08/2012	–	–	REVISED FOR TDI
14	–	06/2013	–	–	REMOVED ACRYLIC/WIRE GLAZING. SPECIFIED FV DIMENSIONS.

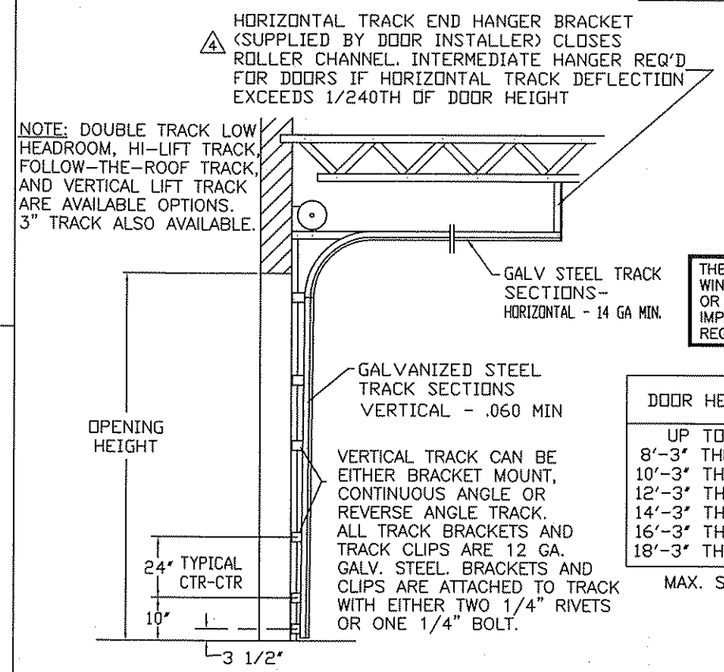

STANDARD-LIFT TRACK DETAILS

MODELS AVAILABLE (CLOPAY/ HOLMES/ IDEAL)
MODELS 524, 520/ 224/ C4ST, C0ST
INSULATED MODELS 524S, 520S, 524V/ 224S/ C4SS, C0SS, C4SV

THE OPTIONAL GLAZING SHOWN ON THIS DRAWING MEETS THE WIND LOAD REQUIREMENTS OF THE FLORIDA BUILDING CODE OR INTERNATIONAL BUILDING CODE BUT DOES NOT MEET THE IMPACT RESISTANT REQUIREMENT FOR WINDBORNE DEBRIS REGIONS (REF. CHAPTER 16 FBC/IBC)

THIS DOOR MEETS OR EXCEEDS THE DESIGN LOADS FOR THE WIND SPEEDS LISTED BELOW ACCORDING TO THE FLORIDA BLDG. CODE OR IBC (ASCE7) FOR THE FOLLOWING CONDITIONS: 1) ENCLOSED BUILDING, 2) DOOR HAS 2' OF WIDTH IN BUILDING'S END ZONE, 3) IMPORTANCE FACTOR OF 1.0, 4) ROOF SLOPE LESS THAN 10°, AND 5) 50% SAFETY FACTOR.

WIND SPEED (MPH)	≤ 100	110	110	120
EXPOSURE LEVEL	B or C	B	C	B
MEAN ROOF HEIGHT	30'	30'	25'	30'

DOOR HEIGHT 'A'	NUMBER OF SECTIONS
UP TO 8'-0"	4
8'-3" THRU 10'-0"	5
10'-3" THRU 12'-0"	6
12'-3" THRU 14'-0"	7
14'-3" THRU 16'-0"	8
16'-3" THRU 18'-0"	9
18'-3" THRU 20'-0"	10

MAX. SECTION HEIGHT: 24"

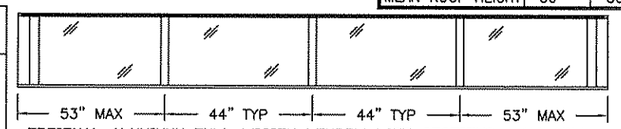

OPTIONAL ALUMINUM FULL VISION WINDOW LITE SECTIONS AVAILABLE (1/8" DSB). FULL VISION SECTIONS TO HAVE 2" X 2" X 1/4" L-ANGLE HORIZONTAL REINFORCEMENT. L-ANGLES ATTACHED TO THE REINFORCING RIB WITH 4" X 6" OFFSET PLATES AT EVERY HINGE LOCATION AND THE CENTER OF EACH PANEL WITH (2) 1/4" X 5/8" HEX BOLTS AND NUTS.

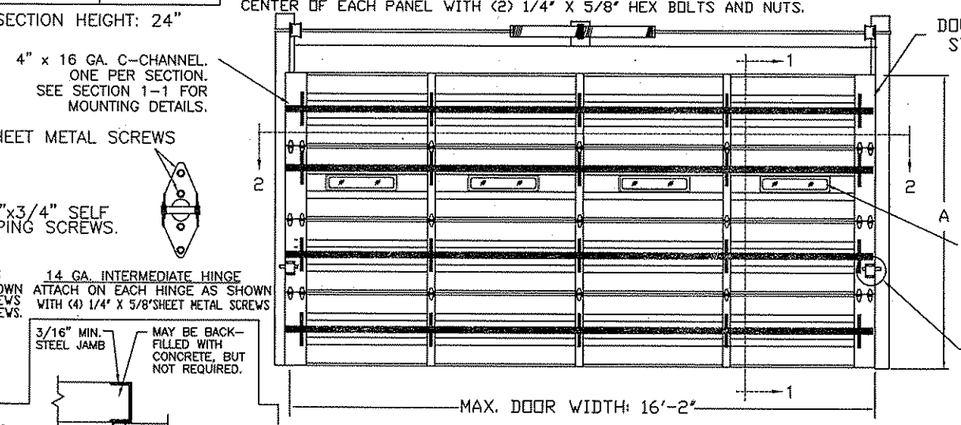

DOOR WIDTH	NUMBER OF CENTER STILES	NUMBER OF C-CHANNEL STRAPS
12'-3" THRU 13'-2"	2	4
13'-3" THRU 16'-2"	3	5

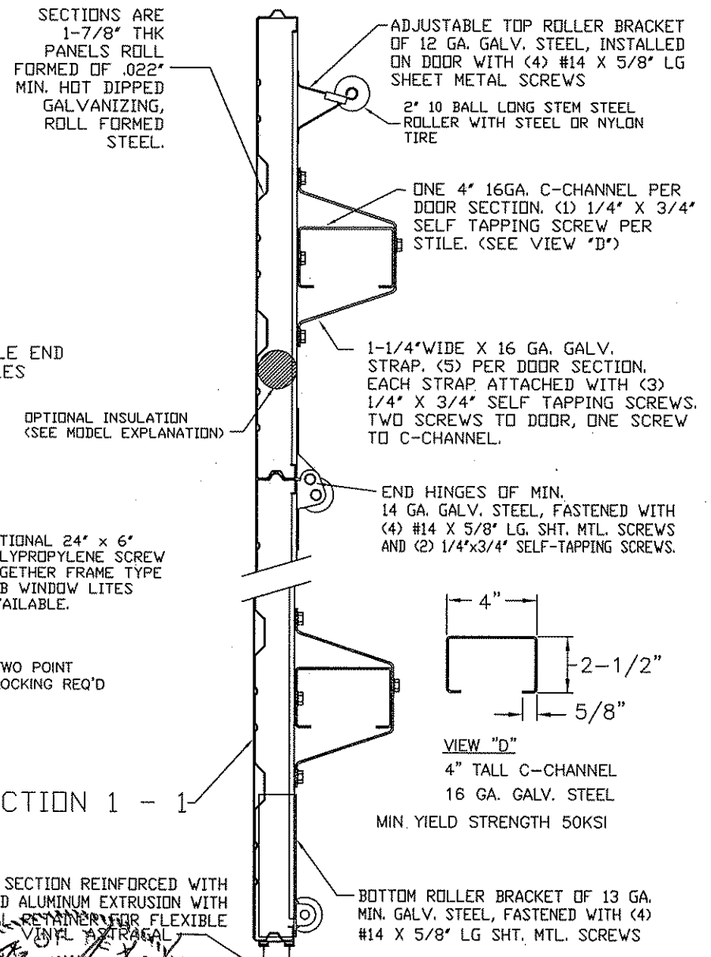

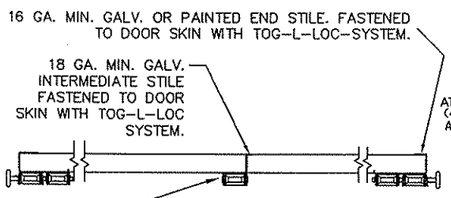

SECTION 2-2

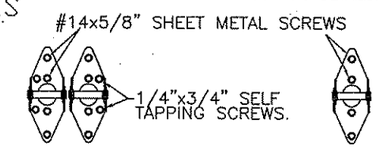

14 GA. DOUBLE END HINGES ATTACH ON EACH HINGE AS SHOWN (4) #14 X 5/8" LG. SHT. MTL. SCREWS AND (2) 1/4"x3/4" SELF-TAPPING SCREWS.

14 GA. INTERMEDIATE HINGE ATTACH ON EACH HINGE AS SHOWN WITH (4) 1/4" X 5/8"SHEET METAL SCREWS

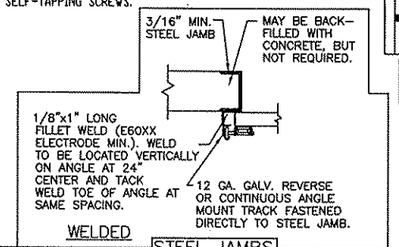

WELDED STEEL JAMBS

ANCHOR NOTE: FIRST (BOTTOM) ANCHOR STARTING AT NO MORE THAN HALF OF THE MAXIMUM ON-CENTER DISTANCE. HIGHEST ANCHOR INSTALLED AT LEAST AS HIGH AS THE DOOR OPENING.

WOOD JAMB ON CONCRETE

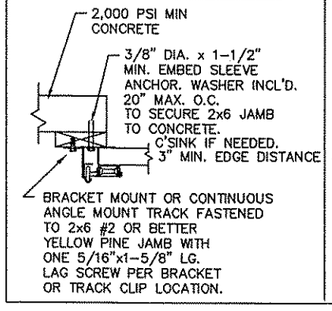

CONCRETE JAMBS

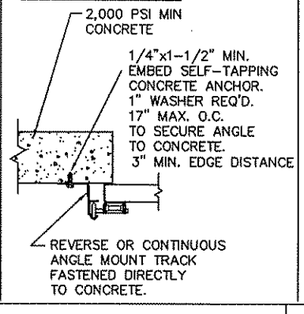

SELF-TAPPING SCREWS

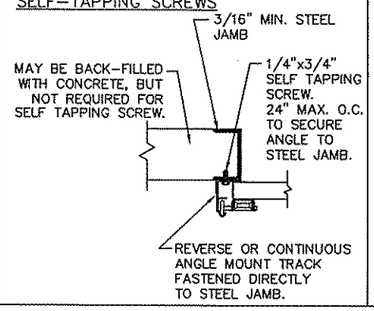

WOOD JAMBS

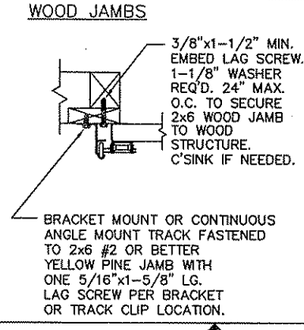

MARK WESTERFIELD, P.E.
FLORIDA P.E. #48495, NC P.E. #23832, TEXAS P.E. #91513

THE DESIGN OF THE SUPPORTING STRUCTURAL ELEMENTS IS THE RESPONSIBILITY OF THE BUILDING ENGINEER OR ARCHITECT OF RECORD.

DESIGN LOADS: +25 & -25 P.S.F.
TEST LOADS +37.5 & -37.5 P.S.F.

MANUFACTURING PRODUCT CODE: MPC: C-PAN-1E448

CLOPAY CORP.
ALL RIGHTS RESERVED.

Third Angle Projection

Unless Stated Otherwise
TOLERANCES:
.0 = ±.031
.00 = ±.015
.000 = ±.005
.0000 = ±.001
Degrees = ±1/2°
Unless Stated Otherwise DIMENSIONS ARE IN INCHES.

Clopay Building Products Company
8585 Duke Boulevard
Mason, OH 45040 USA
Tel. No. 513-770-4800
Fax No. 513-770-4853

DESCRIPTION: COMMERCIAL RIBBED DOOR, +/- 25 PSF DESIGN LOAD

DRAWN BY: RJK	DATE: 4/04/99	SCALE: NOTED	DWG. SIZE B
CHECKED BY: MWW	DATE: 4/99	SHEET 1 OF 1	
DWG. NO.: 101886		VER: IBC	