NOTE: DOUBLE TRACK LOW HEADROOM, HI-LIFT TRACK, FOLLOW-THE-ROOF TRACK, AND VERTICAL LIFT TRACK ARE AVAILABLE OPTIONS. 3" TRACK ALSO AVAILABLE.

MAX 10'-2" WIDE X 18'-0" HIGH

MODELS AVAILABLE (CLOPAY/ HOLMES/ IDEAL)
MODELS 524, 520/ 224/ C4ST, COST
INSULATED MODELS 524S, 520S, 524V/ 224S/ C4SS, COSS, C4SV

REVISIONS					
REV. NO.	ZONE:	DATE:	ECN NO.	APPVD:	DESCRIPTION
08	–	05/2005	–	–	UPDATE CODE REF., SPECIFIED OPTIONAL ACRYLIC.
09	–	10/2005	–	–	ADDED ROLLER OPTION
10	–	11/2008	–	–	ADDED MPC; UPDATED JAMB ATTACHMENT.
11	–	02/2012	–	–	UPDATED WINDCODE CHART
12	–	08/2012	–	–	REVISED FOR TDI
13	–	06/2013	–	–	REMOVED ACRYLIC/WIRE GLAZING. SPECIFIED GLAZING DIMENSIONS.

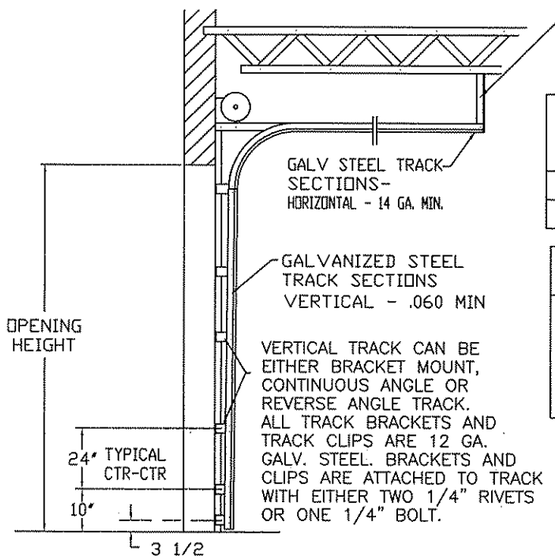

SIDE ELEVATION
STANDARD-LIFT TRACK DETAILS

DOOR WIDTH	NUMBER OF CENTER STILES
UP TO 9'-2"	1
9'-3" THRU 10'-2"	2

DOOR HEIGHT 'A'	NUMBER OF SECTIONS
UP TO 8'-0"	4
8'-3" THRU 10'-0"	5
10'-3" THRU 12'-0"	6
12'-3" THRU 14'-0"	7
14'-3" THRU 16'-0"	8
16'-3" THRU 18'-0"	9

MAX. SECTION HEIGHT: 24"

OPTIONAL ALUMINUM FULL VISION WINDOW LITE SECTIONS AVAILABLE (1/8" DSB) FULL VISION SECTIONS TO HAVE 2" X 2" X 1/8" L-ANGLE HORIZONTAL REINFORCEMENT. L-ANGLES ATTACHED TO THE REINFORCING RIB WITH (2) 1/4"-20 X 5/8" HEX HEAD BOLTS AND NUTS AT EVERY HINGE LOCATION.

THE OPTIONAL GLAZING SHOWN ON THIS DRAWING MEETS THE WIND LOAD REQUIREMENTS OF THE FLORIDA BUILDING CODE OR INTERNATIONAL BUILDING CODE BUT DOES NOT MEET THE IMPACT RESISTANT REQUIREMENT FOR WINDBORNE DEBRIS REGIONS (REF. CHAPTER 16 FBC/IBC)

THIS DOOR MEETS OR EXCEEDS THE DESIGN LOADS FOR THE WIND SPEEDS LISTED BELOW ACCORDING TO THE FLORIDA BLDG. CODE OR IBC (ASCE7) FOR THE FOLLOWING CONDITIONS: 1) ENCLOSED BUILDING, 2) DOOR HAS 2' OF WIDTH IN BUILDING'S END ZONE, 3) IMPORTANCE FACTOR OF 1.0, 4) ROOF SLOPE LESS THAN 10°, AND 5) 50% SAFETY FACTOR.

WIND SPEED (MPH)	≤ 110	120	120	130
EXPOSURE LEVEL	B or C	B	C	B
MEAN ROOF HEIGHT	30'	30'	20'	30'

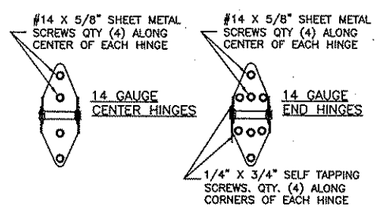

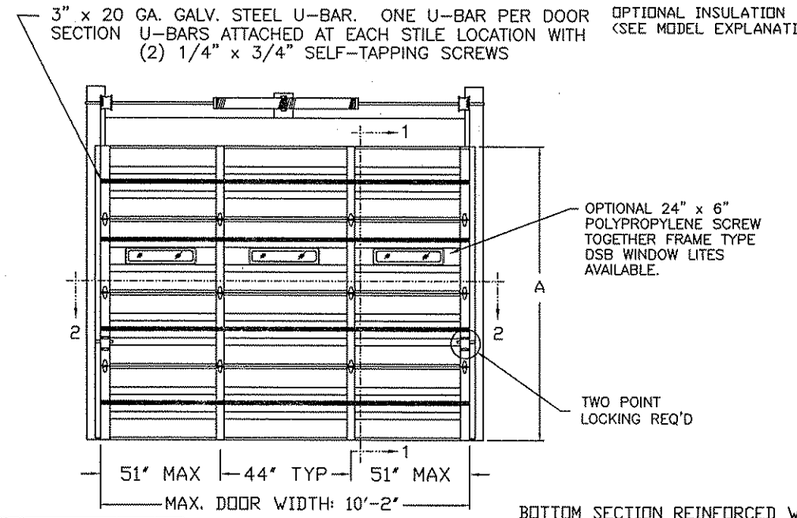

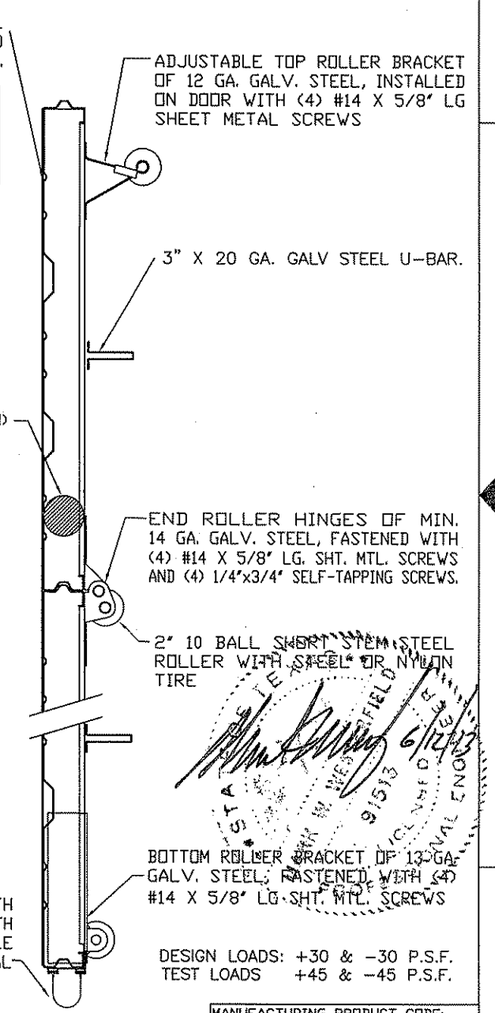

SECTION 1-1

DESIGN LOADS: +30 & -30 P.S.F.
TEST LOADS +45 & -45 P.S.F.

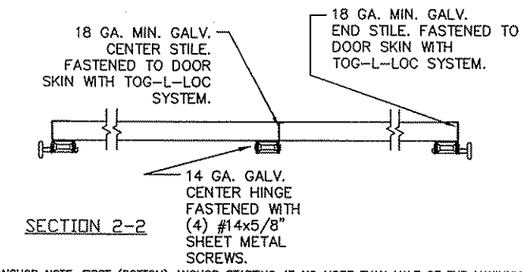

SECTION 2-2

ANCHOR NOTE: FIRST (BOTTOM) ANCHOR STARTING AT NO MORE THAN HALF OF THE MAXIMUM ON-CENTER DISTANCE. HIGHEST ANCHOR INSTALLED AT LEAST AS HIGH AS THE DOOR OPENING.

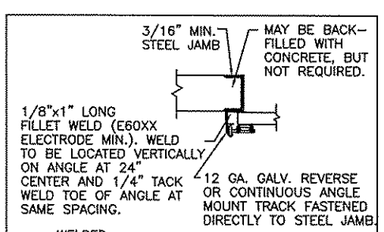

WOOD JAMB ON CONCRETE

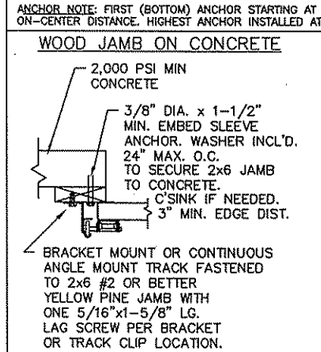

CONCRETE JAMBS

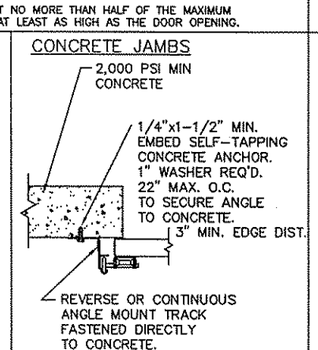

STEEL JAMBS

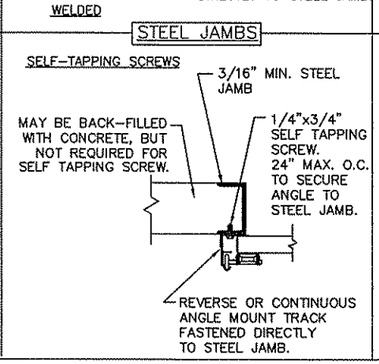

WOOD JAMBS

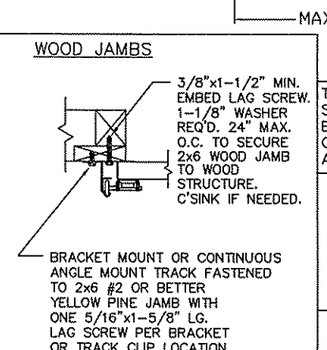

THE DESIGN OF THE SUPPORTING STRUCTURAL ELEMENTS IS THE RESPONSIBILITY OF THE BUILDING ENGINEER OR ARCHITECT OF RECORD.

MARK WESTERFIELD, P.E.
FLORIDA P.E. #48495, NC P.E. #23832,
TEXAS P.E. #91513

MANUFACTURING PRODUCT CODE: MPC: C-PAN-1E448

CLOPAY CORP.
ALL RIGHTS RESERVED.

Third Angle Projection

Unless Stated Otherwise TOLERANCES are
.0 = ±.031
.00 = ±.015
.000 = ±.005
.0000 = ±.001
Degrees = ±1/2°
Unless Stated Otherwise DIMENSIONS ARE IN INCHES.

Clopay Building Products Company
8585 Duke Boulevard
Mason, OH 45040 USA
Tel. No. 513-770-4800
Fax No. 513-770-4853

WINDLOAD RATING W5

DESCRIPTION: COMMERCIAL RIBBED DOOR, +/- 30 PSF DESIGN LOAD

DRAWN BY: RJK	DATE: 4/19/99	SCALE: NOTED	DWG. SIZE B
CHECKED BY: MWW	DATE: 4/99	SHEET 1 OF 1	
DWG. NO.: 101875			