NOTES:

1. IMPACT RESISTANT GLAZING OPTION – IMPACT RESISTANT GLAZING SYSTEM MAY BE INSTALLED IN TOP OR INTERMEDIATE SECTION (WITH OR WITHOUT DECORATIVE INSERTS). GLAZING SHALL BE 1/4" POLYCARBONATE. MAXIMUM GLAZING DIMENSIONS SHALL BE 14" x 46" CUTOUT, FASTENED WITH A MINIMUM #8 X 1" SMS: 3X ALONG THE HORIZONTAL AND 3X ALONG THE VERTICAL. SEE DETAIL E ON SHEET 2 FOR ASSEMBLY DETAILS.

2. NON-IMPACT REISTANT GLAZING OPTION – .090" MINIMUM SSB GLAZING IN MOLDED FRAMES SCREWED TOGETHER WITH A MINIMUM OF (10) #8x1" SCREWS (3X ALONG THE HORIZONTAL AND 2X ALONG THE VERTICAL) INSTALLED IN TOP OR INTERMEDIATE SECTION (WITH OR WITHOUT DECORATIVE INSERTS) MEETS UNIFORM STATIC WIND PRESSURES SHOWN ON THIS DRAWING. MAXIMUM GLAZING DIMENSIONS SHALL BE 15" x 46" CUTOUT. GLAZING IS NOT IMPACT RESISTANT AND DOES NOT MEET THE REQUIREMENTS FOR WIND-BORNE DEBRIS REGIONS.

3. VINYL OR WOOD DOOR STOP NAILED A MAXIMUM OF 6" O.C. MUST OVERLAP TOP AND BOTH ENDS OF PANELS MINIMUM 7/16" TO MEET NEGATIVE PRESSURES.

4. KEY LOCK, SLIDE LOCK, OR OPERATOR REQUIRED.

5. LOUVER OPTION – .040" MINIMUM LOUVERS IN MOLDED FRAMES SCREWED TOGETHER WITH A MINIMUM OF (10) #8x1" SCREWS (3X ALONG THE HORIZONTAL AND 2X ALONG THE VERTICAL) INSTALLED IN THE BOTTOM SECTION. MAXIMUM LOUVER DIMENSIONS SHALL BE 15" x 19" CUTOUT. LOUVERS ARE NOT IMPACT RESISTANT AND DO NOT MEET THE REQUIREMENTS FOR WIND-BORNE DEBRIS REGIONS.

6. FACER STEEL TO HAVE A MINIMUM 27 GA THICKNESS AND BACKER STEEL TO HAVE A MINIMUM 29 GA THICKNESS.

7. A 4-1/2" x 6" x 22 GA BACKER PLATE IS TO BE LOCATED AT EVERY INTERMEDIATE AND OUTER END HINGE LOCATION.

8. THE DESIGN OF THE SUPPORTING STRUCTURAL ELEMENTS SHALL BE THE RESPONSIBILITY OF THE PROFESSIONAL OF RECORD FOR THE BUILDING OR STRUCTURE AND IN ACCORDANCE WITH CURRENT BUILDING CODES FOR THE LOADS LISTED ON THIS DRAWING.

9. DOOR JAMB TO BE MINIMUM 2x6 STRUCTURAL GRADE LUMBER. REFER TO JAMB CONNECTION SUPPLEMENT FOR ATTACHMENT TO SUPPORTING STRUCTURE.

10. FOR LOW HEAD ROOM LIFT CONDITIONS, TOP BRACKET SHALL BE A 13 GA LHR 7/4 TOP BRACKET WITHOUT PUSHNUTS AND WITH A MINIMUM OF (3) 1/4-14x7/8" SELF DRILLING CRIMPTITE SCREWS IN LIEU OF THE BRACKET SHOWN ON THIS DRAWING. U-BAR ON TOP SECTION SHALL BE INSTALLED ON TOP OF LHR TOP BRACKETS.

11. DOOR WITHOUT POST SYSTEM HAS BEEN TESTED TO WITHSTAND DESIGN PRESSURES CORRESPONDING TO A 75 MPH WIND SPEED (+/-14.40 PSF). POST SYSTEM SHALL BE INSTALLED WHEN WIND SPEEDS ARE EXPECTED TO EXCEED 75 MPH.

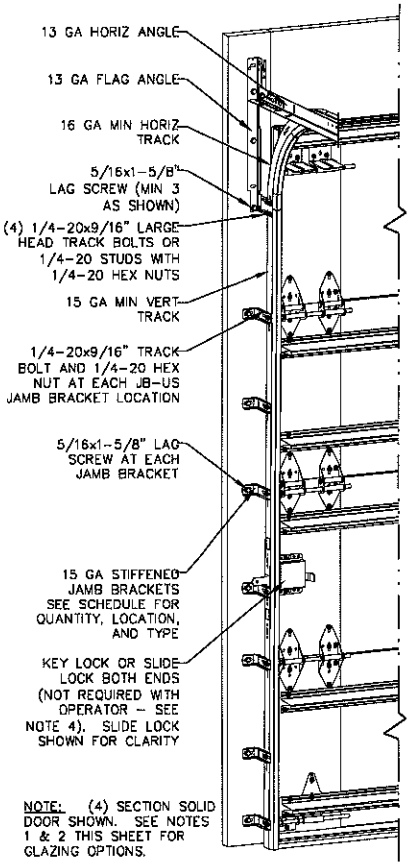

NOTE: (4) SECTION SOLID DOOR SHOWN. SEE NOTES 1 & 2 THIS SHEET FOR GLAZING OPTIONS.

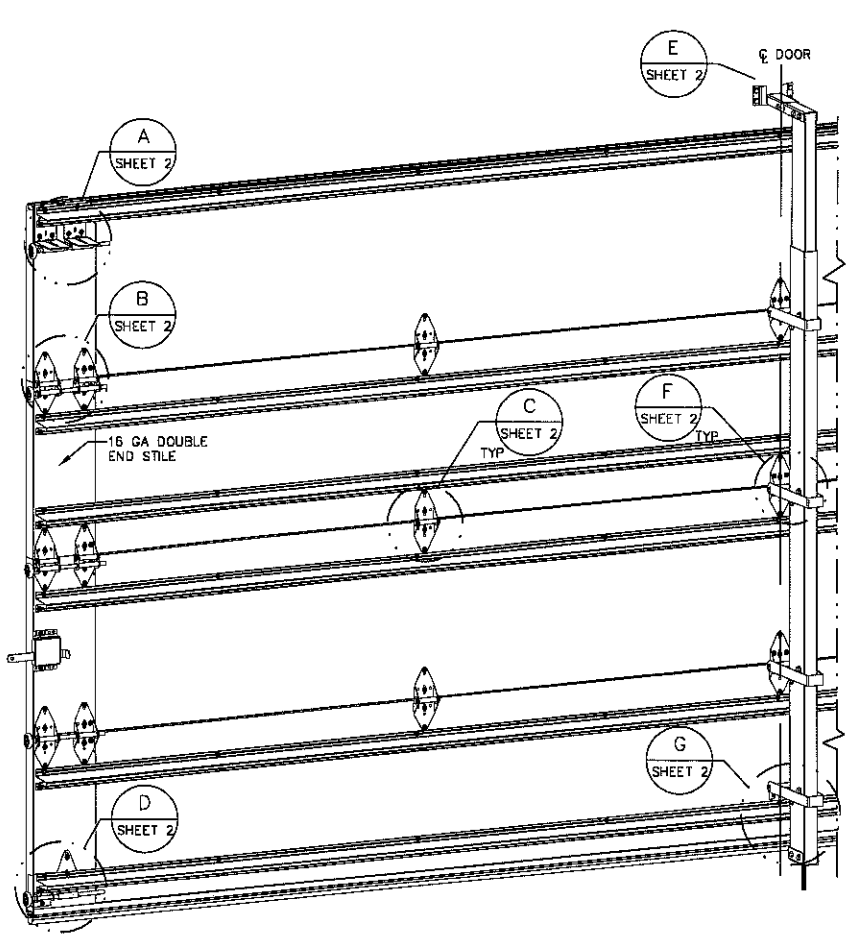

REVISIONS
P1 REVISED MODELS GRT 1/22/14
P2 UPDATED GLAZING AND LOUVER DESCRIPTION GRT 5/9/14

JAMB BRACKET SCHEDULE

DOOR HEIGHT	NO. OF SECTIONS	NO. OF JAMB BRACKETS (EACH JAMB)	LOCATION OF CENTERLINE OF JAMB BRACKETS MEASURED FROM BOTTOM OF TRACK (ALL DIMENSIONS ± 2")
6'-6"	4	7	2" (JB-US), 10" (JB-US), 21-3/4" (JB-US), 29-3/4" (JB-US), 39" (JB-US), 48" (JB-US), 57-1/4" (JB-US)
7'-0"	4	7	2" (JB-US), 10" (JB-US), 21-3/4" (JB-US), 29-3/4" (JB-US), 42" (JB-US), 52-1/2" (JB-US), 63-1/4" (JB-US)
7'-6"	4 OR 5	8	2" (JB-US), 10" (JB-US), 18-3/4" (JB-US), 26-3/4" (JB-US), 36" (JB-US), 45" (JB-US), 54-1/4" (JB-US), 74-1/2" (JB-US)
8'-0"	4 OR 5	8	2" (JB-US), 10" (JB-US), 21-3/4" (JB-US), 29-3/4" (JB-US), 39" (JB-US), 48" (JB-US), 57-1/2" (JB-US), 75-1/2" (JB-US)

NOTE:
(JB-US) FOLLOWING DIMENSION DENOTES SLOTTED JAMB BRACKET ATTACHED TO TRACK WITH 1/4-20x9/16" TRACK BOLT AND NUT AS SHOWN ABOVE.

SUPERIMPOSED DESIGN PRESSURE LOADS ON SUPPORTING STRUCTURE

MAX DOOR WIDTH	MAX DOOR HEIGHT	UNIFORM LOAD EACH JAMB (PLF)	POINT LOAD AT HEADER AND SLAB AT EACH POST LOCATION (LBS)
16'-2"	7'-0"	+139.4/-157.6	+1684.9/-1904.6
	8'-0"	+139.4/-157.6	+1917.3/-2167.4
14'-2"	7'-0"	+169.8/-192.0	+1580.3/-1786.4
	8'-0"	+168.8/-192.0	+1798.2/-2032.8
12'-2"	7'-0"	+150.5/-170.2	+1387.3/-1568.3
	8'-0"	+150.6/-170.2	+1578.6/-1784.6
10'-2"	7'-0"	+128.1/-144.8	+1177.0/-1330.5
	8'-0"	+128.1/-144.8	+1339.4/-1514.0

Mark Sawicki
6/4/14

STATE OF TEXAS
MARK A SAWICKI
106291
LICENSED
PROFESSIONAL ENGINEER

MARK A. SAWICKI, PE
2501 S. STATE HWY 121, SUITE 200
LEWISVILLE, TX 75067
FL PE 72813
TX PE 106291

PROFESSIONAL ENGINEER'S SEAL PROVIDED ONLY FOR VERIFICATION OF WINDLOAD CONSTRUCTION DETAILS.

Wayne® Dalton
A DIVISION OF OVERHEAD DOOR CORP
3395 ADDISON DRIVE
PENSACOLA, FLORIDA 32514
(850) 474-9890

STATIC PRESSURE RATINGS		APPROVED SIZES		SCALE: N.T.S.		SIZE: A
DESIGN (PSF):	+46.00/-52.00	MAX WIDTH:	16'-2"		DATE	NAME
TEST (PSF):	+69.00/-78.00	MAX HEIGHT:	8'-0"	DRAWN	6/12/13	GRT
IMPACT/CYCLIC RATED (YES/NO):	YES	MAX SECTION HEIGHT:	24"	CHECKED		

MODELS 4600/4650/6600/8300/8500/5150/5200/TM515/TM525

SHEET 1 OF 2

WINDLOAD SPECIFICATION OPTION CODE 2244

DRAWING PART NO. 352073

REV. P2

(2) 12 GA COMMERCIAL 'L' FRAME TOP BRACKETS ATTACHED WITH (4) 1/4-20x7/8" SELF DRILLING SCREWS (2 THROUGH STRUT AND TOP BRACKET)

13 GA ROLLER SLIDE ATTACHED TO BRACKET WITH 5/16-18 BOLT & NUT IN THE CENTER SLOT

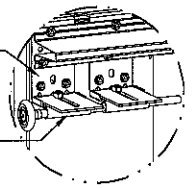

DETAIL A

2500 PSI MIN CONCRETE

8" X 8" MIN TURNDOWN SLAB AT EDGE

8" MIN EDGE DISTANCE

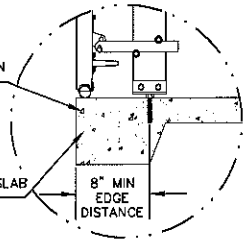

DETAIL H

ADD (2) 1/4-14x7/8" SELF DRILLING CRIMPTITE SCREWS (INSIDE OF EACH INSIDE END HINGE)

2" STEEL ROLLER WITH 9" GRADE 1144 OR EQUIVALENT STEM

(2) 14 GA WIDE BODY END HINGES EACH ATTACHED WITH (4) 1/4-14x7/8" SELF DRILLING CRIMPTITE SCREWS

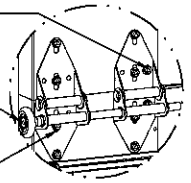

DETAIL B

14 GA WIDE BODY INTERMEDIATE HINGE ATTACHED WITH (4) 1/4-14x7/8" SELF DRILLING CRIMPTITE SCREWS

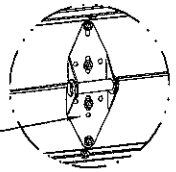

DETAIL C

12 GA EXTENSION BRACKET ATTACHED WITH (3) 1/4-14x7/8" SELF DRILLING CRIMPTITE SCREWS (2 THROUGH STRUT AND BRACKET)

14 GA BOTTOM BRACKET ATTACHED WITH (2) 1/4-14x7/8" SELF DRILLING CRIMPTITE SCREWS THROUGH STRUT AND BOTTOM BRACKET AND (1) 1/4-14x5/8" SELF DRILLING TAMPER RESISTANT SCREW

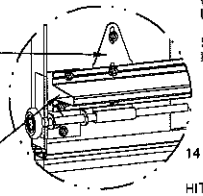

DETAIL D

HEADER

HEADER LOCK BRACKET

TOP PLATE EXTENSION

TOP LOCK PLATE

(4) 5/16x1-5/8" LAG SCREWS

5/16-18x2-1/2" HEX BOLT & NUT

(4) 5/16-12x1" SELF DRILLING SCREWS

INNER POST

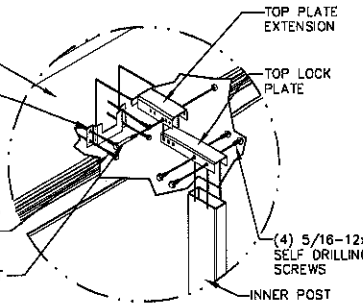

DETAIL E

14 GA CENTER HINGE

HITCH PIN

(4) 1/4-14x7/8" SELF DRILLING CRIMPTITE SCREWS

(4) 1/4-14x7/8" SELF DRILLING CRIMPTITE SCREWS ADDED TO EACH HINGE WITH A POST STRAP

LOCKING STRAP

(2) 5/16-12x1" SELF DRILLING SCREWS EACH WITH (1) 5/16 FLAT WASHER

POST

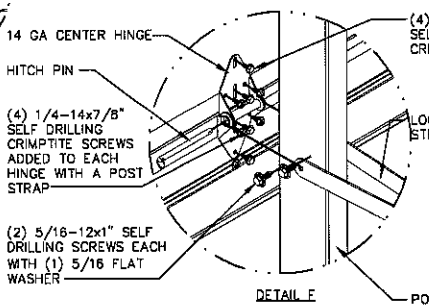

DETAIL F

NO. 2 HALF HINGE ALIGN BOTTOM OF HINGE WITH TOP OF THE U-BAR

HITCH PIN

(4) 1/4-14x7/8" SELF DRILLING CRIMPTITE SCREWS (2) THROUGH STRUT AND HALF HINGE

(2) 5/16-12x1" SELF DRILLING SCREWS W/ 5/16 FLAT WASHERS

BOTTOM BRACKET

(4) 5/16-12x1" SELF DRILLING SCREWS

POST

LOCKING STRAP

1/2-13x3-1/2" HEX BOLT

1/2-13 HEX NUT

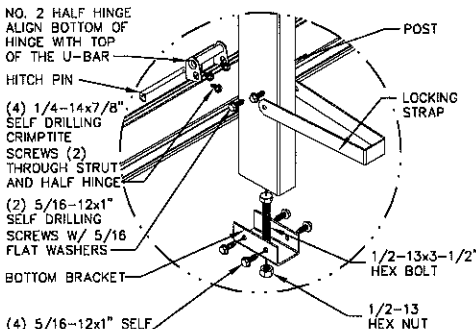

DETAIL G

HINGE & BACKER PLATE LOCATIONS

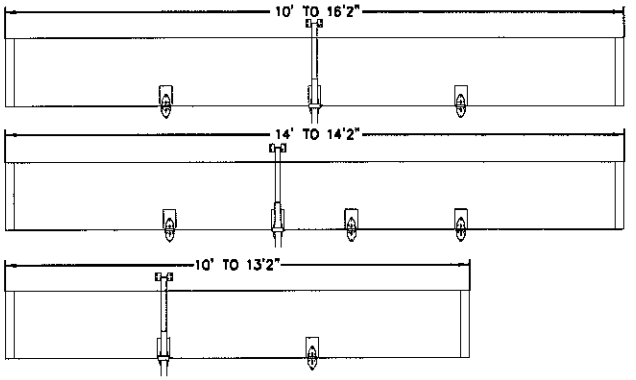

(5) SECTION DOORS WITH (8) 3" 20 GA 80 KSI U-BARS LOCATED AS SHOWN

(4) SECTION DOORS WITH (6) 3" 20 GA 80 KSI U-BARS LOCATED AS SHOWN

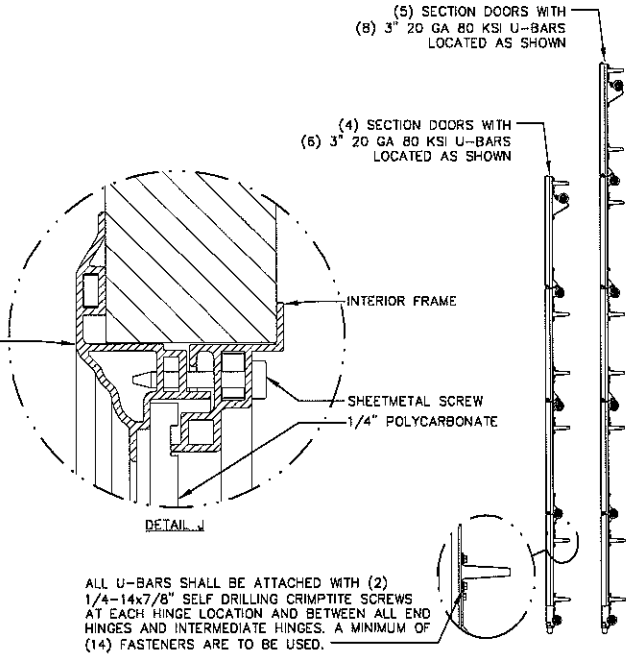

INTERIOR FRAME

EXTERIOR FRAME

SHEETMETAL SCREW

1/4" POLYCARBONATE

DETAIL J

ALL U-BARS SHALL BE ATTACHED WITH (2) 1/4-14x7/8" SELF DRILLING CRIMPTITE SCREWS AT EACH HINGE LOCATION AND BETWEEN ALL END HINGES AND INTERMEDIATE HINGES. A MINIMUM OF (14) FASTENERS ARE TO BE USED.

REVISIONS

P1 REVISED MODELS GRT 1/22/14

P2 UPDATED GLAZING AND LOUVER DESCRIPTION GRT 5/9/14

STATE OF TEXAS
MARK A SAWICKI
106291
LICENSED
PROFESSIONAL ENGINEER

6/4/14

MARK A. SAWICKI, PE
2501 S. STATE HWY 121, SUITE 200
LEWISVILLE, TX 75067
FL PE 72613
TX PE 106291

PROFESSIONAL ENGINEER'S SEAL PROVIDED ONLY FOR VERIFICATION OF WINDLOAD CONSTRUCTION DETAILS.

Wayne® Dalton

A DIVISION OF OVERHEAD DOOR CORP
3395 ADDISON DRIVE
PENSACOLA, FLORIDA 32514
(850) 474-9890

STATIC PRESSURE RATINGS	APPROVED SIZES	SCALE: N.T.S.		SIZE: A
DESIGN (PSF): +46.00/-52.00	MAX WIDTH: 16'-2"		DATE	NAME
TEST (PSF): +69.00/-78.00	MAX HEIGHT: 8'-0"	DRAWN	6/12/13	GRT
IMPACT/CYCLIC RATED (YES/NO): YES	MAX SECTION HEIGHT: 24"	CHECKED		

MODELS 4600/4650/6600/8300/8500/5150/5200/TM515/TM525

SHEET 2 OF 2

WINDLOAD SPECIFICATION OPTION CODE 2244

DRAWING PART NO. 352073

REV. P2