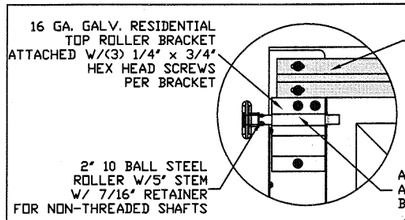

TYPICAL TOP FIXTURES 1
N.T.S.

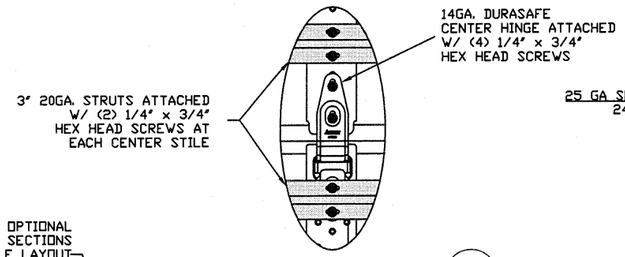

TYPICAL DURASAFE CENTER HINGE 2
N.T.S.

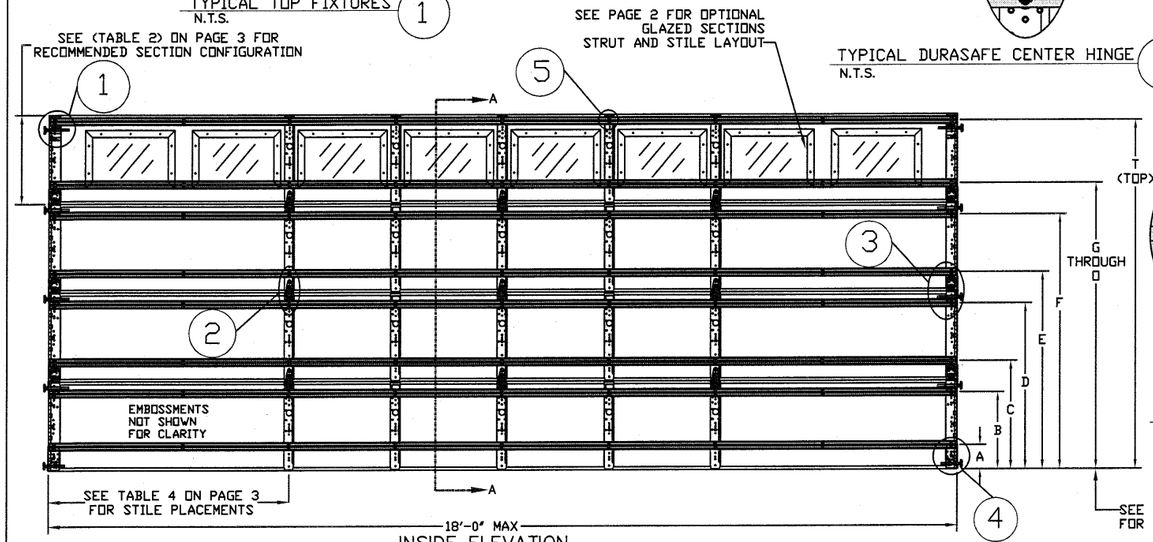

INSIDE ELEVATION
N.T.S.

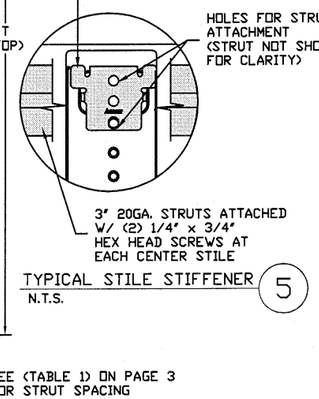

TYPICAL STILE STIFFENER 5
N.T.S.

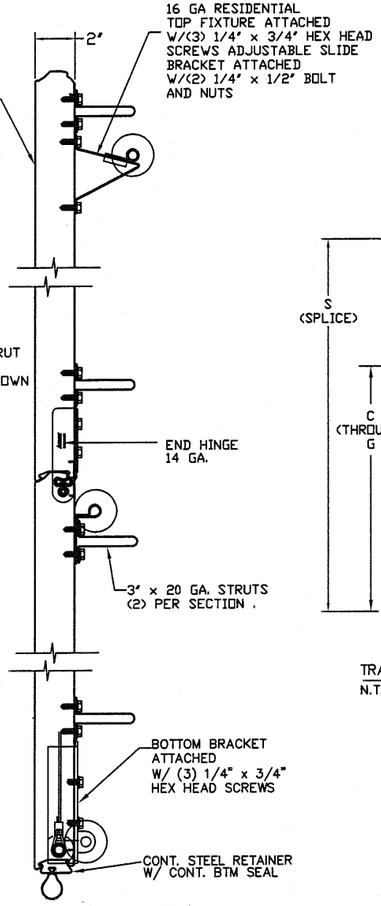

SECTION A-A (SIDE VIEW)
N.T.S.

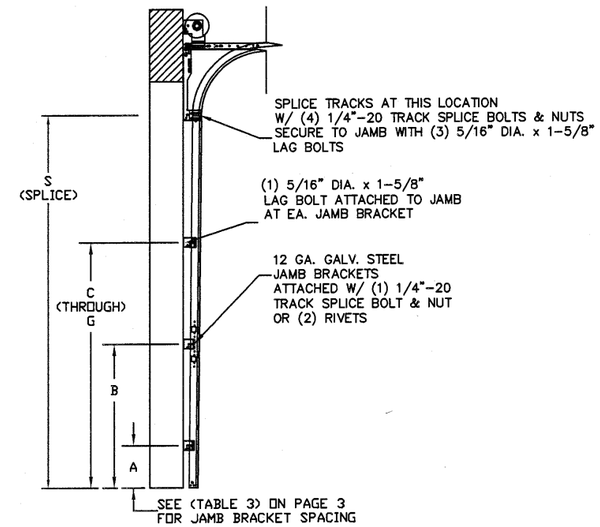

TRACK CONFIGURATION FOR 6'6" UP TO 14' TALL DOORS
N.T.S.

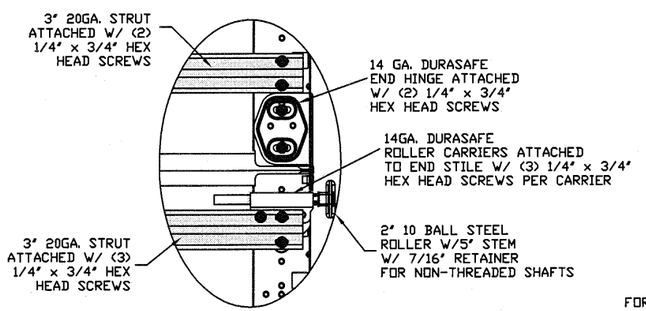

TYPICAL DURASAFE END HINGE 3
N.T.S.

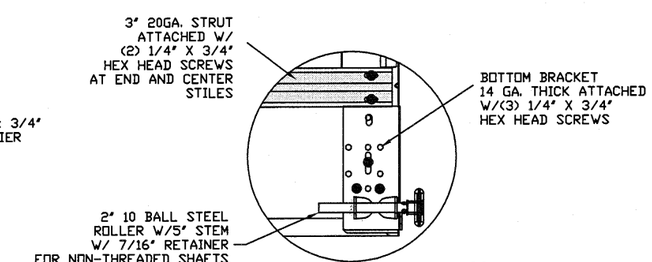

TYPICAL BOTTOM BRACKET 4
N.T.S.

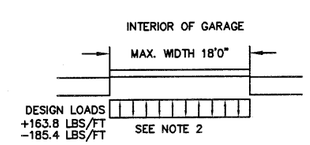

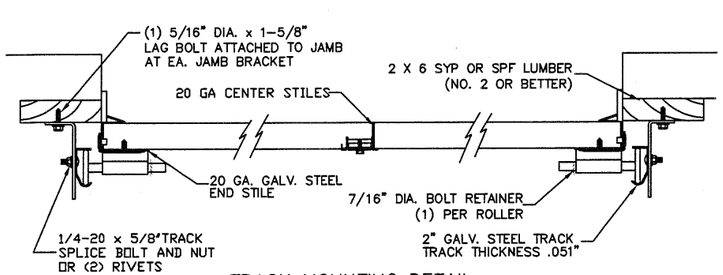

TRACK MOUNTING DETAIL
N.T.S.

THE METHOD OF TESTING WAS IN SUBSTANTIAL CONFORMANCE WITH THE PROCEDURE DESCRIBED IN ASTM E330 AND DASMA 108. THE PRESSURES SHOWN ON THE DRAWINGS WERE CALCULATED USING ASCE 7-98/02/05 WITH THE FOLLOWING PARAMETERS (5 FEET OF DOOR WIDTH IN THE END ZONE, ROOF AT ANY SLOPE, AND I=1.0):

WIND SPEED (MPH)	110	100	95	91	87
EXPOSURE LEVEL	B	C	C	D	D
MEAN ROOF HEIGHT	30'	15'	25'	15'	25'

SPECIFICATIONS AND NOTES

1. ALL THE LOAD FROM THE DOOR IS TRANSFERRED TO THE VERTICAL TRACK, FROM THE TRACK THE LOAD IS TRANSFERRED TO THE VERTICAL JAMBS. THE HORIZONTAL JAMB OR HEADER RECEIVES NO PORTION OF THE LOAD TRANSFERRED FROM THE DOOR.
2. EACH VERTICAL JAMB RECEIVES MAXIMUM DESIGN LOADS OF: +163.8 LBS/FT & -185.4 LBS/FT
3. DOORS AND HARDWARE WILL BE DESIGNED, MANUFACTURED AND INSTALLED WITH STANDARDS AS SET FORTH BY DASMA.
4. DOOR SECTIONS SHALL BE 25 GA. MIN. (.019") ROLLED FORMED LIGHT COMMERCIAL QUALITY
5. SUPPORTING STRUCTURAL ELEMENTS SHALL BE DESIGNED BY A REGISTRED PROFESSIONAL ENGINEER FOR WIND LOADS INDICATED ON THIS DRAWING IN ADDITION TO OTHER LOADINGS.
6. REFER TO TABLES ON THE REVERSE SIDE FOR ADDITIONAL DOOR WIDTHS AND THEIR DESIGN PRESSURES

REV	DESCRIPTION OF REVISIONS	DATE	BY
A	UPDATED BOTTOM BRACKET INFORMATION ADDED OAKSUMMIT AND GLAZING OPTIONS	08/30/05	DLJ
B	REVISED NOTE 6	09/02/08	DLJ
C	WIND SPEED TABLE & TRACK CONFIGURATIONS	04/20/12	RLR
D	ADDED JAMB BRACKET	12/18/12	RLR

MAX SIZE
18' WIDTH
14' HEIGHT
(DOOR HEIGHT SUBJECT TO WEIGHT LIMITATIONS)

DESIGN LOADS
+18.2 PSF
-20.6 PSF

TEST LOADS
(1.5 x DESIGN LOADS)
+27.3 PSF
-30.9 PSF

Thomas L. Shelmerdine, PE (TX PE #85829)
Structural Solutions, PA (TX Firm #F-0040063)

STATE OF TEXAS
THOMAS L. SHELMERDINE
85829
LICENSED
PROFESSIONAL ENGINEER
TX

dba Structural Solutions of North Carolina, Inc.
5921-G W. Friendly Ave., Greensboro, NC 27410

Amarr
165 CARRIAGE COURT WINSTON-SALEM, N.C. 27105

MODEL #650 OAK SUMMIT w/DuraSafe
MODEL #600 STRATFORD w/DuraSafe
MODEL #950 HERITAGE w/DuraSafe
Short, Long, Flush & Oak Summit Panel's

SIZE	DRAWN BY DLJ	DATE 09/10/03	DRAWING NUMBER
B	CHECKED BY AAE	DATE 09/10/03	IRC-6018-110-15
			SHEET 1 OF 3

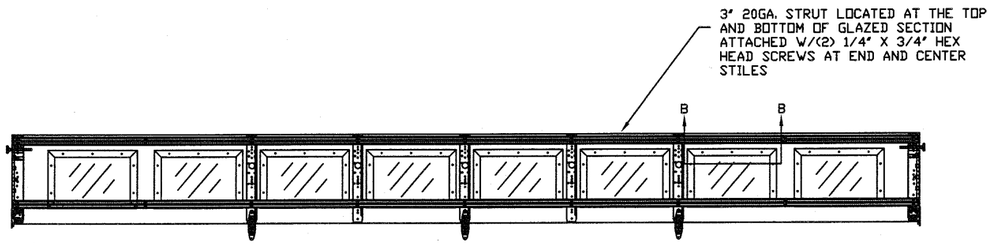

OPTIONAL SHORT PANEL GLAZED SECTION STRUT AND STILE LAYOUT

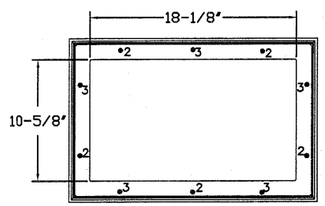

SHORT PANEL GLAZING FASTENER DETAIL
N.T.S.

GLAZING OPTION CROSS SECTION

GLAZING NOT AVAILABLE IN WIND-BORNE DEBRIS REGION
GLAZING MEETS ASTM E1300-04

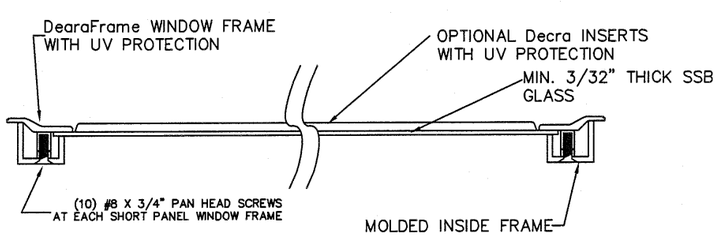

SECTION B-B

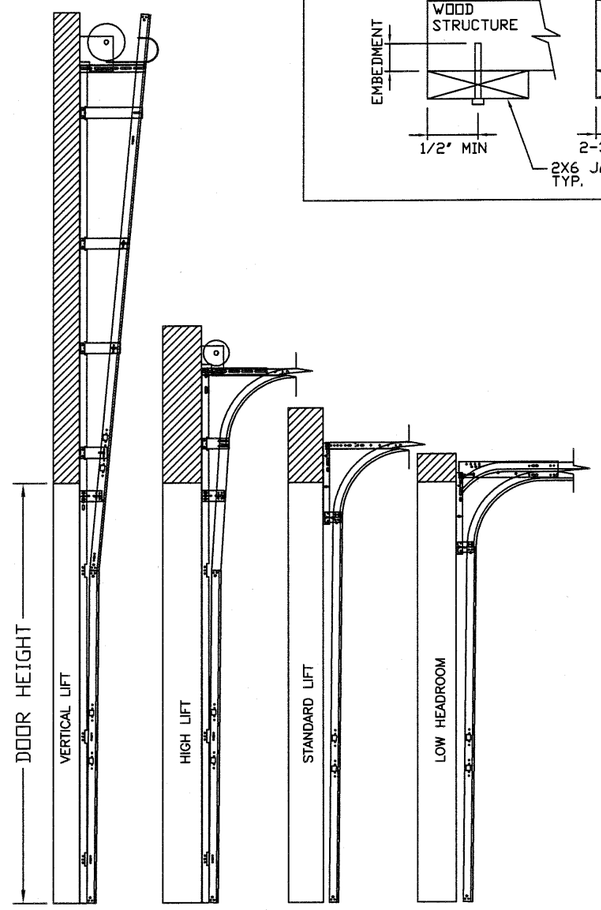

AVAILABLE TRACK CONFIGURATIONS
N.T.S.

WOOD JAMB ATTACHMENT TO STRUCTURE

2 X 6 VERTICAL JAMB ATTACHMENT TO WOOD FRAME STRUCTURE
5/16" X 3" LAG SCREWS STARTING 6" FROM ENDS THEN 24" O.C. (1 1/2" EMBEDMENT)

2 X 6 VERTICAL JAMB ATTACHMENT TO 2,000 PSI CONCRETE
HILTI KWIK BOLT 3/8" X 4" STARTING 6" FROM ENDS THEN 24" O.C. (2 1/2" EMBEDMENT)
HILTI SLEEVE ANCHOR 3/8" X 2-3/4" STARTING 6" FROM ENDS THEN 24" O.C. (1 1/4" EMBEDMENT)
ITW/RAMSET REDHEAD (TRU-BOLT) 3/8" X 4" STARTING 6" FROM ENDS THEN 24" O.C. (2 1/2" EMBEDMENT)

2 X 6 VERTICAL JAMB ATTACHMENT TO HOLLOW C-90 BLOCK
SIMPSON 1/4" X 3" TITEN SCREWS STARTING 6" FROM ENDS, USE PAIRS OF FASTENERS (3" APART) AT 16" O.C. (1 1/2" EMBEDMENT)
HILTI 1/4" X 2-3/4" KWIK-CON II+ SCREWS STARTING 6" FROM ENDS, USE PAIRS OF FASTENERS (3" APART) AT 16" O.C. (1 1/4" EMBEDMENT)

2 X 6 VERTICAL JAMB ATTACHMENT TO GROUTED C-90 BLOCK (2000 PSI GROUT)
HILTI SLEEVE ANCHOR 3/8" X 2-3/4" STARTING 6" FROM ENDS THEN 24" O.C. (1 1/4" EMBEDMENT) (OR, USE FASTENERS FOR HOLLOW C-90 BLOCK)

*LAGS AND BOLTS CAN BE COUNTERSUNK TO PROVIDE A FLUSH MOUNTING SURFACE.
*PREPARATION OF WOOD JAMBS BY OTHERS

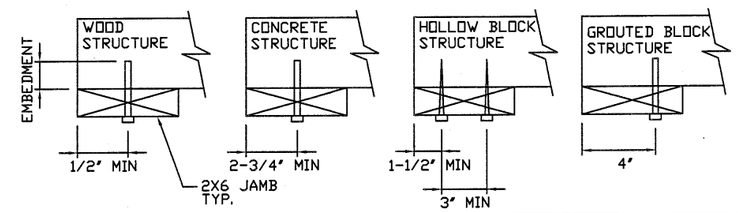

REV	DESCRIPTION OF REVISIONS	DATE	BY
A	UPDATED BOTTOM BRACKET INFORMATION ADDED OAKSUMMIT AND GLAZING OPTIONS	08/30/05	DLJ
B	REVISED NOTE 6	09/02/08	DLJ
C	WIND SPEED TABLE & TRACK CONFIGURATIONS	04/20/12	RLR
D	ADDED JAMB BRACKET	12/18/12	RLR

MAX SIZE
18' WIDTH
14' HEIGHT
(DOOR HEIGHT SUBJECT TO WEIGHT LIMITATIONS)

DESIGN LOADS
+18.2 PSF
-20.6 PSF

TEST LOADS
(1.5 x DESIGN LOADS)
+27.3 PSF
-30.9 PSF

Thomas L. Shelmerdine, PE (TX PE #85829)
Structural Solutions, PA (TX Firm #F-004063)

STATE OF TEXAS
THOMAS L. SHELMERDINE
85829
LICENSED
PROFESSIONAL ENGINEER
TX

dba Structural Solutions of North Carolina, Inc.
5921-G W. Friendly Ave., Greensboro, NC 27410

Amarr
165 CARRIAGE COURT WINSTON-SALEM, N.C. 27105

MODEL #650 OAK SUMMIT w/DuraSafe
MODEL #600 STRATFORD w/DuraSafe
MODEL #950 HERITAGE w/DuraSafe
Short, Long, Flush & Oak Summit Panel's

SIZE	DRAWN BY DLJ	DATE 09/10/03	DRAWING NUMBER
B	CHECKED BY AAE	DATE 09/10/03	IRC-6018-110-15
			SHEET 2 OF 3

TABLE 1

DOOR HEIGHT	STRUT SPACING (BASED ON RECOMMENDED SECTION CONFIGURATION)															TOP
	A	B	C	D	E	F	G	H	I	J	K	L	M	N	O	T
6' 6"	5 1/2"	18 1/4"	25 1/2"	36 1/4"	43 1/2"	54 1/4"	61 1/2"									76 1/2"
7'	5 1/2"	18 1/4"	25 1/2"	39 1/4"	46 1/2"	60 1/4"	67 1/2"									82 1/2"
7' 6"	5 1/2"	15 1/4"	22 1/2"	33 1/4"	40 1/2"	51 1/4"	58 1/2"	69 1/4"	76 1/2"							88 1/2"
8'	5 1/2"	18 1/4"	25 1/2"	36 1/4"	43 1/2"	54 1/4"	61 1/2"	72 1/4"	79 1/2"							94 1/2"
8' 6"	5 1/2"	18 1/4"	25 1/2"	39 1/4"	46 1/2"	60 1/4"	67 1/2"	78 1/4"	85 1/2"							100 1/2"
9'	5 1/2"	15 1/4"	22 1/2"	33 1/4"	40 1/2"	51 1/4"	58 1/2"	69 1/4"	76 1/2"	87 1/4"	94 1/2"					106 1/2"
9' 6"	5 1/2"	18 1/4"	25 1/2"	36 1/4"	43 1/2"	54 1/4"	61 1/2"	72 1/4"	79 1/2"	90 1/4"	97 1/2"					112 1/2"
10'	5 1/2"	18 1/4"	25 1/2"	39 1/4"	46 1/2"	60 1/4"	67 1/2"	78 1/4"	85 1/2"	96 1/4"	103 1/2"					118 1/2"
10' 6"	5 1/2"	18 1/4"	25 1/2"	39 1/4"	46 1/2"	60 1/4"	67 1/2"	81 1/4"	88 1/2"	102 1/4"	109 1/2"					124 1/2"
11'	5 1/2"	18 1/4"	25 1/2"	36 1/4"	43 1/2"	54 1/4"	61 1/2"	72 1/4"	79 1/2"	90 1/4"	97 1/2"	108 1/4"	115 1/2"			130 1/2"
11' 6"	5 1/2"	18 1/4"	25 1/2"	39 1/4"	46 1/2"	60 1/4"	67 1/2"	78 1/4"	85 1/2"	96 1/4"	103 1/2"	114 1/4"	121 1/2"			136 1/2"
12'	5 1/2"	18 1/4"	25 1/2"	39 1/4"	46 1/2"	60 1/4"	67 1/2"	81 1/4"	88 1/2"	102 1/4"	109 1/2"	120 1/4"	127 1/2"			142 1/2"
12'6"	5 1/2"	18 1/4"	25 1/2"	36 1/4"	43 1/2"	54 1/4"	61 1/2"	72 1/4"	79 1/2"	90 1/4"	97 1/2"	108 1/4"	115 1/2"	126 1/4"	133 1/2"	148 1/2"
13'	5 1/2"	18 1/4"	25 1/2"	39 1/4"	46 1/2"	60 1/4"	67 1/2"	78 1/4"	85 1/2"	96 1/4"	103 1/2"	114 1/4"	121 1/2"	132 1/4"	139 1/2"	154 1/2"
13' 6"	5 1/2"	18 1/4"	25 1/2"	39 1/4"	46 1/2"	60 1/4"	67 1/2"	81 1/4"	88 1/2"	102 1/4"	109 1/2"	120 1/4"	127 1/2"	138 1/4"	145 1/2"	160 1/2'
14'	5 1/2"	18 1/4"	25 1/2"	39 1/4"	46 1/2"	60 1/4"	67 1/2"	81 1/4"	88 1/2"	102 1/4"	109 1/2"	123 1/4"	130 1/2"	144 1/4"	151 1/2"	166 1/2"

TABLE 2

DOOR HEIGHT	SECTION HEIGHTS							
	Btm	#2	#3	#4	#5	#6	#7	#8
14' 0"	21"	21"	21"	21"	21"	21"	21"	21"
13' 6"	21"	21"	21"	21"	21"	18"	18"	21"
13' 0"	21"	21"	21"	18"	18"	18"	18"	21"
12' 6"	21"	18"	18"	18"	18"	18"	18"	21"
12' 0"	21"	21"	21"	21"	21"	18"	21"	
11' 6"	21"	21"	21"	18"	18"	18"	21"	
11' 0"	21"	18"	18"	18"	18"	18"	21"	
10' 6"	21"	21"	21"	21"	21"	21"		
10' 0"	21"	21"	21"	18"	18"	21"		
9'6"	21"	18"	18"	18"	18"	21"		
9' 0"	18"	18"	18"	18"	18"	18"		
8' 6"	21"	21"	21"	18"	21"			
8' 0"	21"	18"	18"	18"	21"			
7' 6"	18"	18"	18"	18"	18"			
7' 0"	21"	21"	21"	21"				
6' 6"	21"	18"	18"	21"				

TABLE 3

DOOR HEIGHT	TRACK ATTACHMENT								SPLICE
	A	B	C	D	E	F		G	S
6' 6"	10"	21"	38"	58"					70"
7'	10"	21"	38"	58"					76"
7' 6"	10"	21"	38"	58"	78"				82"
8'	10"	21"	38"	58"	78"				88"
8' 6"	10"	21"	38"	58"	78"				94"
9'	10"	21"	38"	58"	78"				100"
9' 6"	10"	21"	38"	58"	78"	98"			106"
10'	10"	21"	38"	58"	78"	98"			112"
10' 6"	10"	21"	38"	58"	78"	98"			118"
11'	10"	21"	38"	58"	78"	98"	118"		124"
11' 6"	10"	21"	38"	58"	78"	98"	118"		130"
12'	10"	21"	38"	58"	78"	98"	118"		136"
12'6"	10"	21"	38"	58"	78"	98"	118"		142"
13'	10"	21"	38"	58"	78"	98"	118"	138"	148"
13' 6"	10"	21"	38"	58"	78"	98"	118"	138"	154"
14'	10"	21"	38"	58"	78"	98"	118"	138"	160"

JAMB BRACKET SPACING ALLOWS +/– 2" WITH SYP OR SPF NO. 2 OR BETTER ONLY

TABLE 4

Section Width (ft)	Panel Type	Center Stile Locations (Measured from Left Edge)				
		1st (in)	2st (in)	3rd (in)	4th (in)	5th (in)
16' 2	Short	50.27	^73.64	97.00	^120.36	143.73
16' 2	Long	51.17	^74.08	97.00	^119.92	142.83
16' 2	Oak Summit	48.75	^72.88	97.00	^121.13	145.25
16' 4	Short	51.27	^74.64	98.00	^121.36	144.73
16' 4	Long	52.17	^75.08	98.00	^120.92	143.83
16' 4	Oak Summit	49.08	^73.54	98.00	^122.46	146.92
16' 6	Short	52.27	^75.64	99.00	^122.36	145.73
16' 6	Long	51.34	^75.17	99.00	^122.83	146.66
16' 6	Oak Summit	49.42	^74.21	99.00	^123.79	148.59
16' 8	Short	51.34	^75.67	100.00	^124.33	148.66
16' 8	Long	52.20	^76.10	100.00	^123.90	147.80
16' 8	Oak Summit	49.92	^74.96	100.00	^125.04	150.09
16' 10	Short	51.50	^76.25	101.00	^125.75	150.50
16' 10	Long	53.20	^77.10	101.00	^124.90	148.80
16' 10	Oak Summit	50.15	^75.57	101.00	^126.29	151.59
17' 0	Short	53.34	^77.67	102.00	^126.33	150.66
17' 0	Long	54.20	^78.10	102.00	^125.90	149.80
17' 0	Oak Summit	50.92	^76.46	102.00	^127.54	153.09
17' 2	Short	53.00	^78.00	103.00	^128.00	153.00
17' 2	Long	55.20	^79.10	103.00	^126.90	150.80
17' 2	Oak Summit	51.42	^77.21	103.00	^128.79	154.59
17' 4	Short	54.00	^79.00	104.00	^129.00	154.00
17' 4	Long	56.20	^80.10	104.00	^127.90	151.80
17' 4	Oak Summit	51.92	^77.96	104.00	^130.04	156.09
17' 6	Short	55.00	^80.00	105.00	^130.00	155.00
17' 6	Long	57.20	^81.10	105.00	^128.90	152.80
17' 6	Oak Summit	52.42	^78.71	105.00	^131.29	157.59
17' 8	Short	54.80	^80.40	106.00	^131.60	157.20
17' 8	Long	55.80	^80.90	106.00	^131.10	156.20
17' 8	Oak Summit	52.92	^79.46	106.00	^132.54	159.09
17' 10	Short	55.80	^81.40	107.00	^132.60	158.20
17' 10	Long	56.25	^81.63	107.00	^132.38	157.75
17' 10	Oak Summit	53.42	^80.21	107.00	^133.79	160.59
18' 0	Short	57.25	^82.63	108.00	^133.38	158.75
18' 0	Long	57.80	^82.90	108.00	^133.10	158.20
18' 0	Oak Summit	53.92	^80.96	108.00	^135.04	162.09

^ Stiles do not need to be hinged

TABLE 5

Section Width (ft)	Panel Type	Max Design Loads Allowed	
		Positive (PSF)	Negitive (PSF)
16' 2	Short	20.2	22.8
16' 2	Long	20.2	22.8
16' 2	Oak Summit	20.2	22.8
16' 4	Short	20.0	22.6
16' 4	Long	20.0	22.6
16' 4	Oak Summit	20.0	22.6
16' 6	Short	19.8	22.4
16' 6	Long	19.8	22.4
16' 6	Oak Summit	19.8	22.4
16' 8	Short	19.6	22.1
16' 8	Long	19.6	22.1
16' 8	Oak Summit	19.6	22.1
16' 10	Short	19.4	21.9
16' 10	Long	19.4	21.9
16' 10	Oak Summit	19.4	21.9
17' 0	Short	19.2	21.7
17' 0	Long	19.2	21.7
17' 0	Oak Summit	19.2	21.7
17' 2	Short	19.0	21.5
17' 2	Long	19.0	21.5
17' 2	Oak Summit	19.0	21.5
17' 4	Short	18.8	21.3
17' 4	Long	18.8	21.3
17' 4	Oak Summit	18.8	21.3
17' 6	Short	18.6	21.1
17' 6	Long	18.6	21.1
17' 6	Oak Summit	18.6	21.1
17' 8	Short	18.5	20.9
17' 8	Long	18.5	20.9
17' 8	Oak Summit	18.5	20.9
17' 10	Short	18.3	20.7
17' 10	Long	18.3	20.7
17' 10	Oak Summit	18.3	20.7
18' 0	Short	18.2	20.6
18' 0	Long	18.2	20.6
18' 0	Oak Summit	18.2	20.6

REV	DESCRIPTION OF REVISIONS	DATE	BY
A	UPDATED BOTTOM BRACKET INFORMATION ADDED OAKSUMMIT AND GLAZING OPTIONS	08/30/05	DLJ
B	REVISED NOTE 6	09/02/08	DLJ
C	WIND SPEED TABLE & TRACK CONFIGURATIONS	04/20/12	RLR
D	ADDED JAMB BRACKET	12/18/12	RLR

MAX SIZE
18' WIDTH
14' HEIGHT
(DOOR HEIGHT SUBJECT TO WEIGHT LIMITATIONS)

DESIGN LOADS
+18.2 PSF
–20.6 PSF

TEST LOADS
(1.5 x DESIGN LOADS)
+27.3 PSF
–30.9 PSF

Thomas L. Shelmerdine, PE (TX PE #85829)
Structural Solutions, PA (TX Firm #F-004063)

STATE OF TEXAS
THOMAS L. SHELMERDINE
85829
LICENSED
PROFESSIONAL ENGINEER
1/28/13
TX

dba Structural Solutions of North Carolina, Inc.
5921-G W. Friendly Ave., Greensboro, NC 27410

Amarr
165 CARRIAGE COURT WINSTON-SALEM, N.C. 27105

MODEL #650 OAK SUMMIT w/DuraSafe
MODEL #600 STRATFORD w/DuraSafe
MODEL #950 HERITAGE w/DuraSafe
Short, Long, Flush & Oak Summit Panel's

SIZE	DRAWN BY DLJ	DATE 09/10/03	DRAWING NUMBER
B	CHECKED BY AAE	DATE 09/10/03	IRC-6018-110-15
			SHEET 3 OF 3