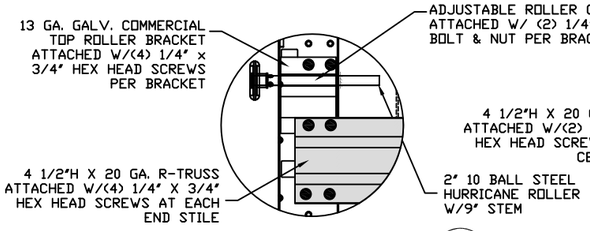

TYPICAL TOP FIXTURES (1)
N.T.S.

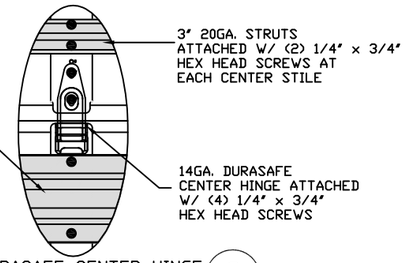

TYPICAL DURASAFE CENTER HINGE (2)
N.T.S.

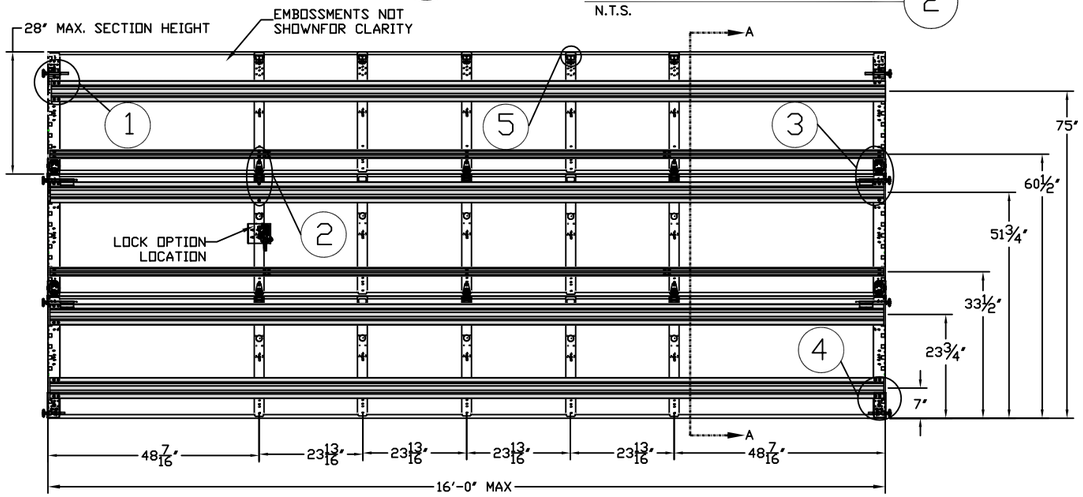

INSIDE ELEVATION
N.T.S.

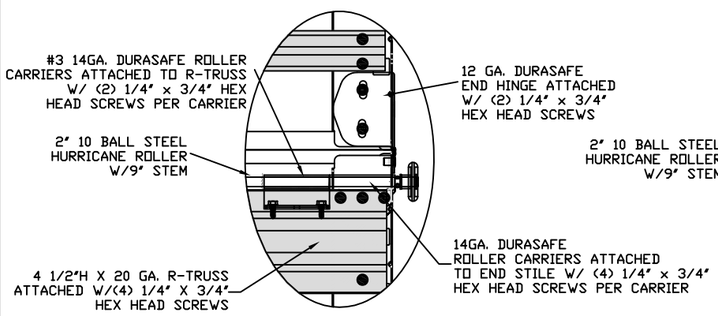

TYPICAL DURASAFE END HINGE (3)
N.T.S.

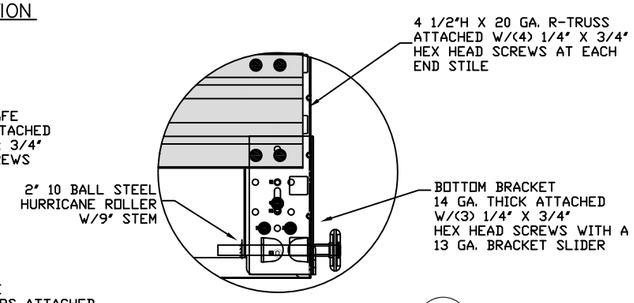

TYPICAL BOTTOM BRACKET (4)
N.T.S.

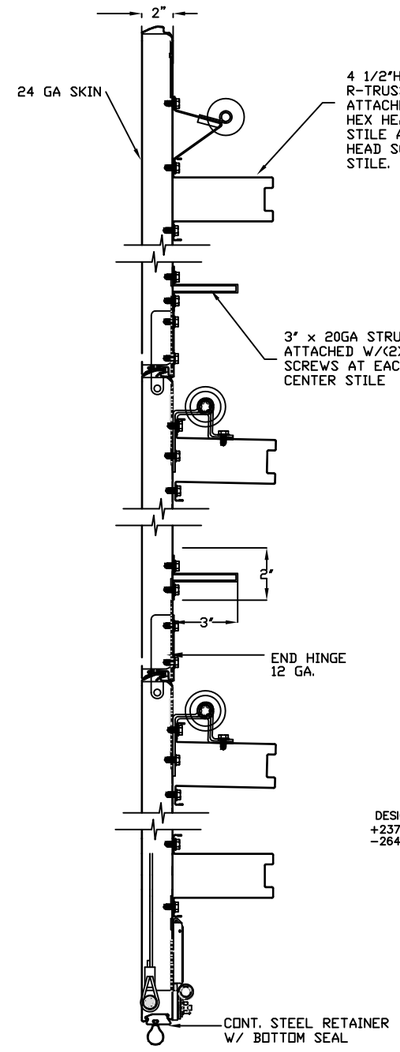

SECTION A–A (SIDE VIEW)
N.T.S.

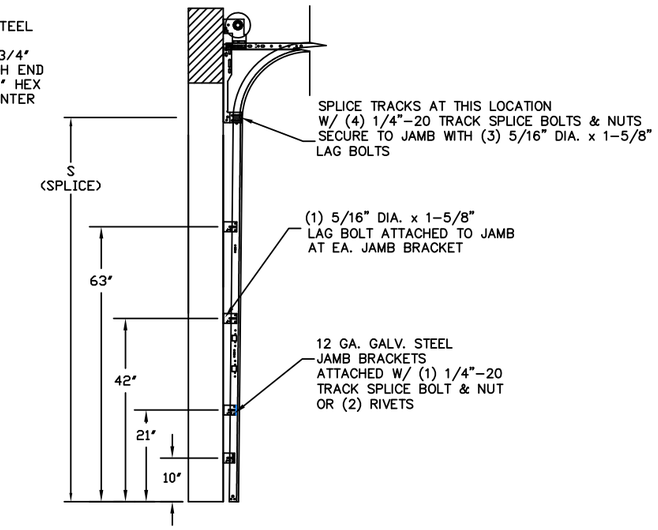

TRACK CONFIGURATION FOR 7' TALL DOORS
N.T.S.
ALL TRACK ATTACHMENTS +/– 2" WITH SYP NO. 2 OR BETTER ONLY

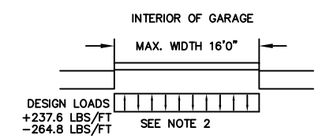

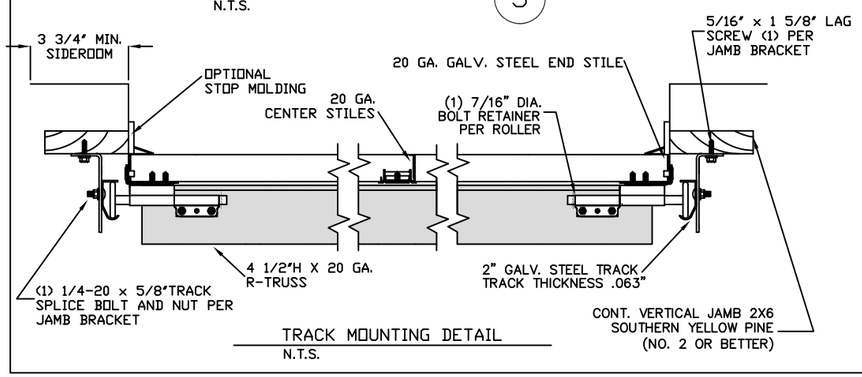

TRACK MOUNTING DETAIL
N.T.S.

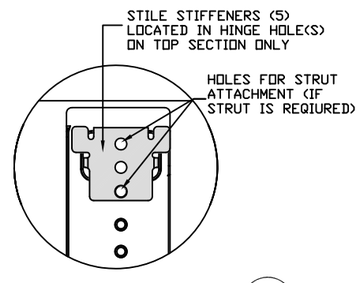

TYPICAL STILE STIFFENER (5)
N.T.S.

THE METHOD OF TESTING WAS IN SUBSTANTIAL CONFORMANCE WITH THE PROCEDURE DESCRIBED IN ASTM E330 AND DASMA 108. THE PRESSURES SHOWN ON THE DRAWINGS WERE CALCULATED USING ASCE 7–98/02/05 WITH THE FOLLOWING PARAMETERS (5 FEET OF DOOR WIDTH IN THE END ZONE, ROOF AT ANY SLOPE, AND I=1.0):

WIND SPEED (MPH)	140	126	120	114	110
EXPOSURE LEVEL	B	C	C	D	D
MEAN ROOF HEIGHT	30'	15'	25'	15'	25'

SPECIFICATIONS AND NOTES

1. ALL THE LOAD FROM THE DOOR IS TRANSFERRED TO THE VERTICAL TRACK, FROM THE TRACK THE LOAD IS TRANSFERRED TO THE VERTICAL JAMBS. THE HORIZONTAL JAMB OR HEADER RECEIVES NO PORTION OF THE LOAD TRANSFERRED FROM THE DOOR.
2. EACH VERTICAL JAMBS RECEIVES MAXIMUM DESIGN LOADS OF: +237.6 LBS/FT & –264.8 LBS/FT
3. DOORS AND HARDWARE WILL BE DESIGNED, MANUFACTURED AND INSTALLED WITH STANDARDS AS SET FORTH BY DASMA.
4. DOOR SECTIONS SHALL BE 24 GA. MIN. (.022") ROLLED FORMED LIGHT COMMERCIAL QUALITY
5. SUPPORTING STRUCTURAL ELEMENTS SHALL BE DESIGNED BY A REGISTRED PROFESSIONAL ENGINEER FOR WIND LOADS INDICATED ON THIS DRAWING IN ADDITION TO OTHER LOADINGS.

REV	DESCRIPTION OF REVISIONS	DATE	BY
A	WIND SPEED TABLE & TRACK CONFIGURATIONS	4/25/12	RLR

MAX SIZE
16' x 7'

DESIGN LOADS
+29.7 PSF
–33.1 PSF

TEST LOADS
(1.5 x DESIGN LOADS)
+44.5 PSF
–49.7 PSF

Amarr GARAGE DOORS
165 CARRIAGE COURT WINSTON-SALEM, N.C. 27105

MODEL #500 CLASSICA

SIZE	DRAWN BY	DLJ	DATE	05/18/04	DRAWING NUMBER
B	CHECKED BY	AAE	DATE	05/18/04	IRC-5216-140-24

ENGINEER: THOMAS L. SHLMERDINE P.E. LIC. No. 0048579 | SHEET 1 OF 2

Section	Center Stile Locations (Measured from Left Edge)					Max Design Loads Allowed	
Width (ft)	1st (in)	2st (in)	3rd (in)	4th (in)	5th (in)	Positive (PSF)	Negitive (PSF)
09' 2	28.13	55.00	81.88			51.6	57.5
09' 4	28.63	56.00	83.38			50.7	56.5
09' 6	29.13	57.00	84.88			49.8	55.5
09' 8	29.63	58.00	86.38			48.9	54.5
09' 10	30.13	59.00	87.88			48.1	53.6
10' 0	30.63	60.00	89.38			47.3	52.7
10' 2	31.13	61.00	90.88			46.5	51.8
10' 4	31.63	62.00	92.38			45.8	51.0
10' 6	32.13	63.00	93.88			45.0	50.2
10' 8	32.63	64.00	95.38			44.3	49.4
10' 10	33.13	65.00	96.88			43.6	48.6
11' 0	33.63	66.00	98.38			43.0	47.9
11' 2	34.13	67.00	99.88			42.3	47.2
11' 4	34.63	68.00	101.38			41.7	46.5
11' 6	35.13	69.00	102.88			41.1	45.8
11' 8	35.63	70.00	104.38			40.5	45.2
11' 10	36.13	71.00	105.88			40.0	44.5
12' 0	24.625	48.31	72	95.688	119.375	29.9	33.4
12' 2	25.125	49.06	73	96.938	120.875	29.6	33.0
12' 4	25.625	49.81	74	98.188	122.375	29.3	32.7
12' 6	26.125	50.56	75	99.438	123.875	29.0	32.3
12' 8	26.625	51.31	76	100.69	125.375	28.7	32.0
12' 10	27.125	52.06	77	101.94	126.875	28.4	31.7
13' 0	27.625	52.81	78	103.19	128.375	28.2	31.4
13' 2	28.125	53.56	79	104.44	129.875	27.9	31.1
13' 4	28.625	54.31	80	105.69	131.375	27.6	30.8
13' 6	29.125	55.06	81	106.94	132.875	27.3	30.5
13' 8	29.625	55.81	82	108.19	134.375	27.1	30.2
13' 10	30.125	56.56	83	109.44	135.875	26.8	29.9
14' 0	30.625	57.31	84	110.69	137.375	26.6	29.6
14' 2	31.125	58.06	85	111.94	138.875	26.3	29.3
14' 4	31.625	58.81	86	113.19	140.375	26.1	29.1
14' 6	32.125	59.56	87	114.44	141.875	25.8	28.8
14' 8	32.625	60.31	88	115.69	143.375	25.6	28.5
14' 10	33.125	61.06	89	116.94	144.875	25.4	28.3
15' 0	33.625	61.81	90	118.19	146.375	25.2	28.0
15' 2	34.125	62.56	91	119.44	147.875	24.9	27.8
15' 4	34.625	63.31	92	120.69	149.375	24.7	27.6
15' 6	47.42	70.208	93.00	115.79	138.58	30.5	34.0
15' 8	48.02	71.008	94.00	116.99	139.98	30.2	33.6
15' 10	48.62	71.808	95.00	118.19	141.38	29.9	33.3
16' 0	48.42	72.208	96.00	119.79	143.58	29.7	33.1

SHADED BOXES INDICATE STILE LOCATIONS

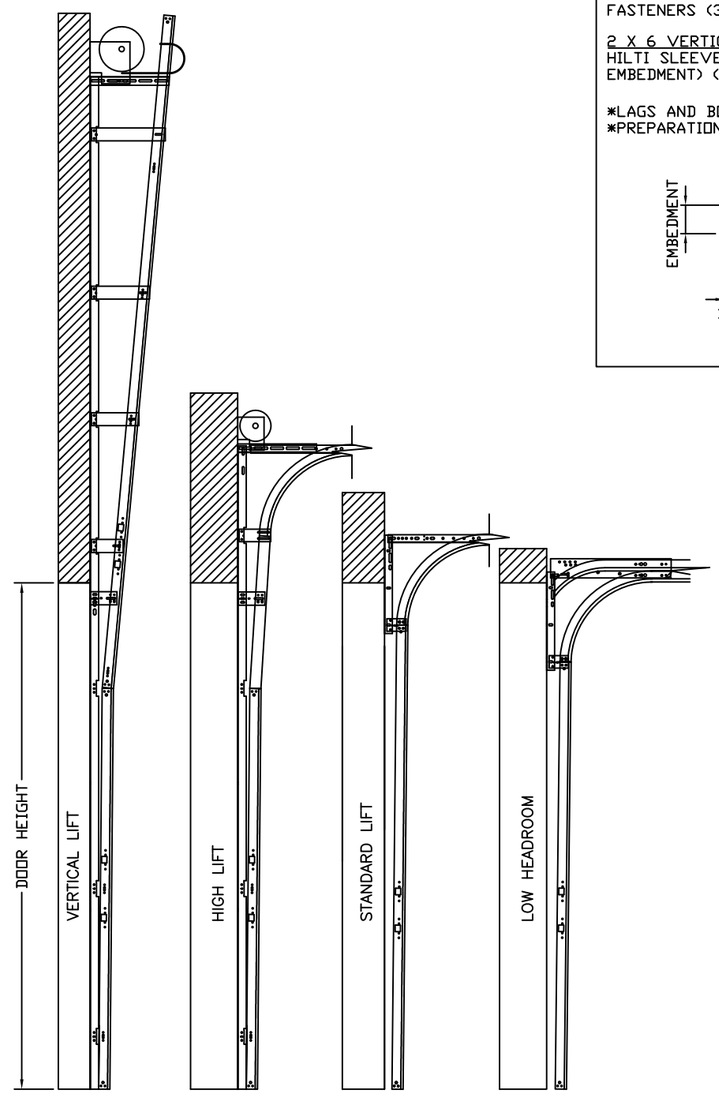

AVAILABLE TRACK CONFIGURATIONS
N.T.S.

WOOD JAMB ATTACHMENT TO STRUCTURE

2 X 6 VERTICAL JAMB ATTACHMENT TO WOOD FRAME STRUCTURE
5/16" X 3" LAG SCREWS STARTING 6" FROM ENDS THEN 20" O.C. (1 1/2" EMBEDMENT)

2 X 6 VERTICAL JAMB ATTACHMENT TO 2,000 PSI CONCRETE
HILTI KWIK BOLT 3/8" X 4" STARTING 6" FROM ENDS THEN 24" O.C. (2 1/2" EMBEDMENT)
HILTI SLEEVE ANCHOR 3/8" X 2-3/4" STARTING 6" FROM ENDS THEN 18" O.C. (1 1/4" EMBEDMENT)
ITW/RAMSET REDHEAD (TRU-BOLT) 3/8" X 4" STARTING 6" FROM ENDS THEN 24" O.C. (2 1/2" EMBEDMENT)

2 X 6 VERTICAL JAMB ATTACHMENT TO HOLLOW C-90 BLOCK
SIMPSON 1/4" X 3" TITEN SCREWS STARTING 6" FROM ENDS, USE PAIRS OF FASTENERS (3" APART) AT 8" O.C. (1 1/2" EMBEDMENT)
HILTI 1/4" X 2-3/4" KWIK-CON II+ SCREWS STARTING 6" FROM ENDS, USE PAIRS OF FASTENERS (3" APART) AT 8" O.C. (1 1/4" EMBEDMENT)

2 X 6 VERTICAL JAMB ATTACHMENT TO GROUTED C-90 BLOCK (2000 PSI GROUT)
HILTI SLEEVE ANCHOR 3/8" X 2-3/4" STARTING 6" FROM ENDS THEN 20" O.C. (1 1/4" EMBEDMENT) (OR, USE FASTENERS FOR HOLLOW C-90 BLOCK)

*LAGS AND BOLTS CAN BE COUNTERSUNK TO PROVIDE A FLUSH MOUNTING SURFACE.
*PREPARATION OF WOOD JAMBS BY OTHERS

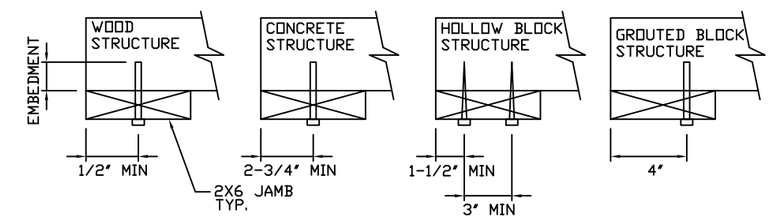

REV	DESCRIPTION OF REVISIONS	DATE	BY
A	WIND SPEED TABLE & TRACK CONFIGURATIONS	4/25/12	RLR

MAX SIZE
16' x 7'

DESIGN LOADS
+29.7 PSF
−33.1 PSF

TEST LOADS
(1.5 x DESIGN LOADS)
+44.5 PSF
−49.7 PSF

STATE OF TEXAS
06/28/2012
THOMAS L. SHELMERDINE
85829
LICENSED
PROFESSIONAL ENGINEER

Amarr GARAGE DOORS
165 CARRIAGE COURT WINSTON-SALEM, N.C. 27105

MODEL #500 CLASSICA

SIZE	DRAWN BY DLJ	DATE 05/18/04	DRAWING NUMBER
B	CHECKED BY AAE	DATE 05/18/04	IRC-5216-140-24
ENGINEER: THOMAS L. SHLMERDINE P.E. LIC. No. 0048579			SHEET 2 OF 2