GENERAL NOTES: SERIES 5455, NON-IMPACT-RESISTANT, VINYL, REINFORCED, OUTSWING FRENCH DOOR & SIDELITE/TRANSOM (SLT/TR)

DESIGN PRESSURE RATING	IMPACT RATING
VARIES, SEE SHEETS 4 & 5	NOT RATED FOR MISSILE IMPACT RESISTANCE

1) THIS PRODUCT HAS BEEN DESIGNED & TESTED TO COMPLY WITH THE REQUIREMENTS OF THE 2006 INTERNATIONAL BUILDING CODE WITH TEXAS REVISIONS.

2) SHUTTERS ARE REQUIRED WHEN USED IN WIND-BORNE DEBRIS REGIONS.

3) MATERIALS USED FOR ANCHOR EVALUATIONS WERE SOUTHERN PINE, ASTM C90 CONCRETE MASONRY UNITS AND CONCRETE WITH MIN. KSI PER ANCHOR TYPE.

4) MASONRY ANCHORS MAY BE USED INTO WOOD AS PER TABLE 1, THIS SHEET. ALL WOOD BUCKS LESS THAN 1-1/2" THICK ARE TO BE CONSIDERED 1X INSTALLATIONS. 1X WOOD BUCKS ARE OPTIONAL IF UNIT IS INSTALLED DIRECTLY TO SUBSTRATE. WOOD BUCKS DEPICTED AS 2X ARE 1-1/2" THICK OR GREATER. 1X AND 2X BUCKS (WHEN USED) SHALL BE DESIGNED TO PROPERLY TRANSFER LOADS TO THE STRUCTURE. WOOD BUCK DESIGN AND INSTALLATION IS THE RESPONSIBILITY OF THE ENGINEER OR ARCHITECT OF RECORD.

5) IF SILL IS TIGHT TO SUBSTRATE, GROUT IS NOT REQUIRED. IF USED, NON-SHRINK, NON-METALLIC GROUT, 3400 PSI MIN., (DONE BY OTHERS) (MAX. 1/4" SHIM SPACE FOR GROUT) MUST FULLY SUPPORT THE ENTIRE LENGTH OF THE SILL THAT IS NOT TIGHT TO THE SUBSTRATE, AND TRANSFER SHEAR LOAD TO SUBSTRATE. IF SUBSTRATE IS WOOD, 30# FELT PAPER OR MASTIC IS REQUIRED BETWEEN THE GROUT AND WOOD SUBSTRATE, OR AS APPROVED BY THE AUTHORITY HAVING JURISDICTION, COMPLYING WITH THE IBC.

6) ANCHOR EMBEDMENT TO BASE MATERIAL SHALL BE BEYOND WALL DRESSING OR STUCCO. USE ANCHORS OF SUFFICIENT LENGTH TO ACHIEVE THE EMBEDMENT SHOWN ON TABLE 1, THIS SHEET. NARROW JOINT SEALANT IS USED ON ALL FOUR CORNERS OF THE FRAME. EXTERIOR INSTALLATION ANCHORS SHOULD BE SEALED. OVERALL SEALING/FLASHING STRATEGY FOR WATER RESISTANCE OF INSTALLATION SHALL BE DONE BY OTHERS AND IS BEYOND THE SCOPE OF THESE INSTRUCTIONS.

7) SHIMS ARE REQUIRED AT EACH ANCHOR LOCATION WHERE THE PRODUCT IS NOT FLUSH TO THE SUBSTRATE. USE SHIMS CAPABLE OF TRANSFERRING APPLIED LOADS. WOOD BUCKS, BY OTHERS, MUST BE SUFFICIENTLY ANCHORED TO RESIST LOADS IMPOSED ON THEM BY THE DOOR, SIDELITE OR TRANSOM.

8) DESIGN PRESSURES:
A. NEGATIVE DESIGN LOADS BASED ON STRUCTURAL TEST PRESSURE, FRAME ANALYSIS AND GLASS PER ASTM E1300-04.
B. POSITIVE DESIGN LOADS BASED ON WATER TEST PRESSURE, STRUCTURAL TEST PRESSURE, FRAME ANALYSIS AND GLASS PER ASTM E1300-04.

8) THE ANCHORAGE METHODS SHOWN HAVE BEEN DESIGNED TO RESIST THE WINDLOADS CORRESPONDING TO THE REQUIRED DESIGN PRESSURE. THE 33-1/3% STRESS INCREASE HAS NOT BEEN USED IN THE DESIGN OF THIS PRODUCT. THE 1.6 LOAD DURATION FACTOR WAS USED FOR THE EVALUATION OF ANCHORS INTO WOOD. ANCHORS THAT COME INTO CONTACT WITH OTHER DISSIMILAR MATERIALS SHALL BE COATED OR CORROSION RESISTANT AS SPECIFIED IN THE 2006 TEXAS REVISIONS TO THE 2006 INTERNATIONAL BUILDING CODE.

9) ALL RIGID AND CELLULAR PVC MANUFACTURED BY VISION EXTRUSIONS, LTD. HAS BEEN TESTED TO COMPLY WITH THE INTERNATIONAL BUILDING CODE FOR PLASTICS.

10) SIZES MUST BE VERIFIED FOR COMPLIANCE WITH EGRESS REQUIREMENTS PER THE INTERNATIONAL BUILDING CODE.

11) THE PGT SERIES FD-5455 (FRENCH DOOR) WAS FORMALLY KNOWN AS THE FD-455 (FRENCH DOOR).

12) REFERENCES: TEST REPORTS FTL-7401, 7416, 7417, & 7418.

Product	Size	DP	Certification #
Mullion	96"	+/-70 psf	190-1010
Door	38-3/4" x 96" (X) 76" x 96" (XX)	+/-70 psf	190-1008
Sidelite or Transom	40" x 111" 111" x 40"	+/-70 psf	190-1004, 1005

TABLE 1:

Group	Anchor	Substrate	Min. Edge Distance	Min. Embedment
A	3/16" Elco Ultracon	Ungrouted CMU, (ASTM C-90)	1"	1-1/4"
		Ungrouted CMU, (ASTM C-90)	2-1/2"	1-1/4"
B	#10 Steel SMS (G5) #10 410 S.S. SMS #10 18-8 S.S. SMS	P.T. Southern Pine (SG=0.55)	1/2"	1-3/8"
		Aluminum, 6063-T5*	5/16"	0.056"
		Steel, A36*	5/16"	0.056"
		Steel Stud, A653 Gr. 33*	5/16"	0.056" (16 Ga)
	3/16" Elco Ultracon	P.T. Southern Pine (SG=0.55)	1/2"	1-3/8"
		Grouted CMU, (ASTM C-90)	2-1/2"	2-1/4"
		Concrete (min. 2.85 ksi)	1"	1-3/8"
	1/4" Elco Ultracon	Ungrouted CMU, (ASTM C-90)	2-1/2"	1-1/4"
C	#12 Steel SMS (G5) #12 410 S.S. SMS #12 18-8 S.S. SMS	P.T. Southern Pine (SG=0.55)	9/16"	1-3/8"
		Aluminum, 6063-T5*	3/8"	0.063"
		Steel, A36*	3/8"	0.056"
		Steel Stud, A653 Gr. 33*	3/8"	0.056" (16 Ga)
	1/4" Elco Ultracon	P.T. Southern Pine (SG=0.55)	1"	1-3/8"
		Grouted CMU, (ASTM C-90)	2-1/2"	1-3/4"
		Concrete (min. 2.85 ksi)	1"	1-3/8"
	1/4" Elco 410 S.S. CreteFlex	Concrete (min. 3.35 ksi)	1"	1-3/4"
		Ungrouted CMU, (ASTM C-90)	2-1/2"	1-1/4"
	1/4" Elco 18-8 S.S. Aggre-Gator	P.T. Southern Pine (SG=0.55)	1"	1-3/8"
		Concrete (min. 3.27 ksi)	1-1/2"	1-3/8"
		Ungrouted CMU, (ASTM C-90)	4"	1-1/4"
D	1/4" Elco Ultracon	Concrete (min. 2.85 ksi)	2-1/2"	1-3/8"
	1/4" Elco410 S.S. CreteFlex	Concrete (min. 3.35 ksi)	2-1/2"	1-3/4"

* MIN. OF 3 THREADS BEYOND THE METAL SUBSTRATE.

TABLE 2:

Type #	Description
1	1/8" Tempered - 5/8" Airspace - 1/8" Tempered
2	3/16" Tempered - 1/2" Airspace - 3/16" Tempered

GUIDE TO SHEETS:

GENERAL NOTES..... 1
ELEVATIONS..... 2
GLAZING DETAILS..... 3
DESIGN PRESSURES..... 4-5
SIDELITE/TRANSOM ANCHORS.... 4-5
INSTALLATION..... 6-8
EXTRUSION PROFILES..... 9
PARTS LIST..... 10
CORNER DETAILS..... 10
HARDWARE DETAILS..... 11

Rev.	Date	Drawn By	DWG No.	Sheet	Scale	Series
	5/29/14	J ROSOWSKI	TDI-455.1	1 OF 11	NTS	FD-455

Rev 1	Rev 2	Rev 3

1070 TECHNOLOGY DRIVE
N. VENICE, FL 34275
P.O. BOX 1529
NOKOMIS, FL 34274
(941)-480-1600

Title: VINYL FRENCH DOOR AND SLT/TR
Desc.: GENERAL NOTES

STATE OF TEXAS
ANTHONY LYNN MILLER
106954
LICENSED
PROFESSIONAL ENGINEER

A. LYNN MILLER, P.E.
P.E.# 106954

EXAMPLE CONFIGURATIONS

TYP. DOOR SLAB

X

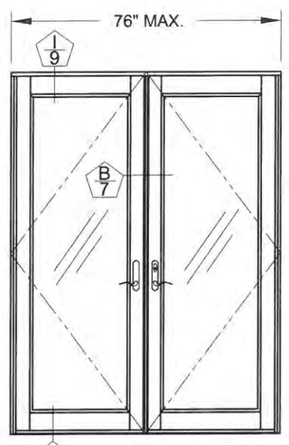

XX

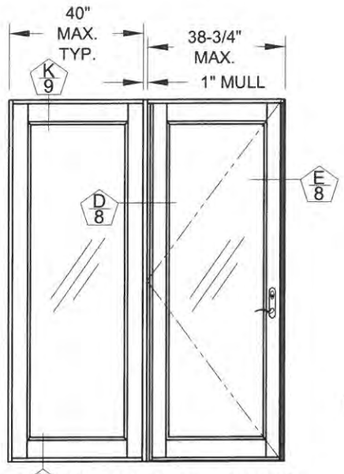

O|X (SHOWN) OR X|O
(WIDE STILES AND WIDE RAILS SHOWN ON SIDELITES)

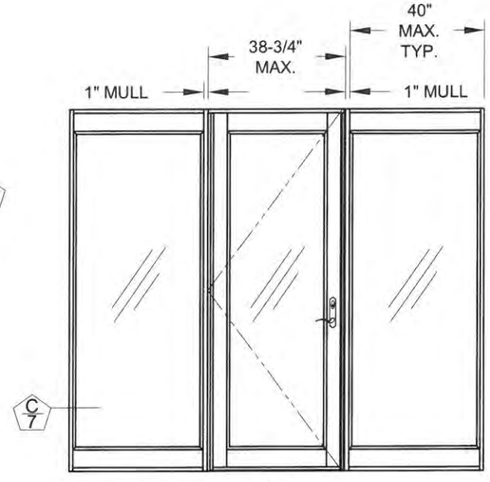

O|X|O
(NARROW STILES AND WIDE RAILS SHOWN ON SIDELITES)

DETAIL
SHEET #

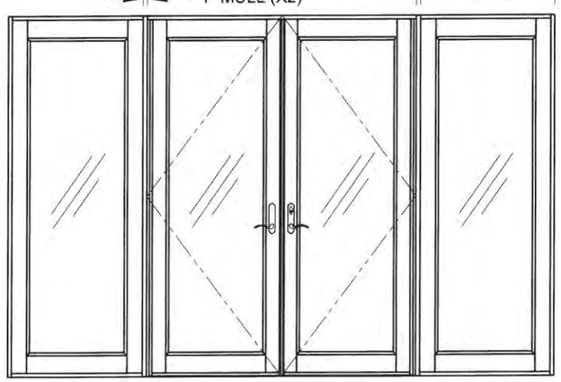

O|XX|O
(WIDE STILES AND WIDE RAILS SHOWN ON SIDELITES)

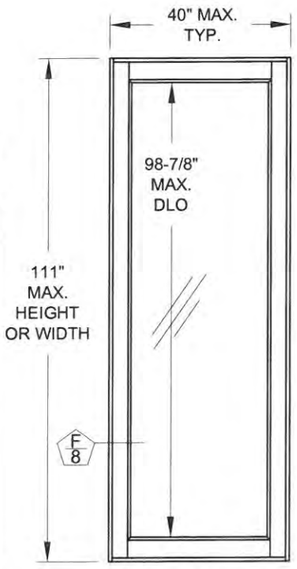

SINGLE O
(WIDE STILES AND WIDE RAILS SHOWN ON SIDELITES)

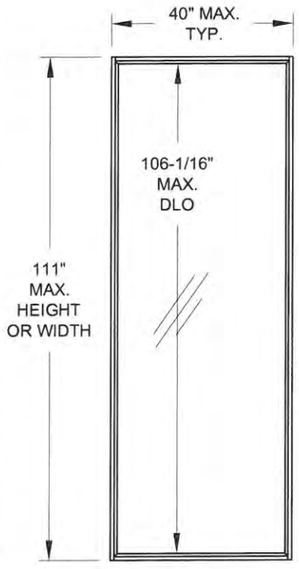

SINGLE O
(NARROW STILES AND NARROW RAILS SHOWN ON SIDELITES)

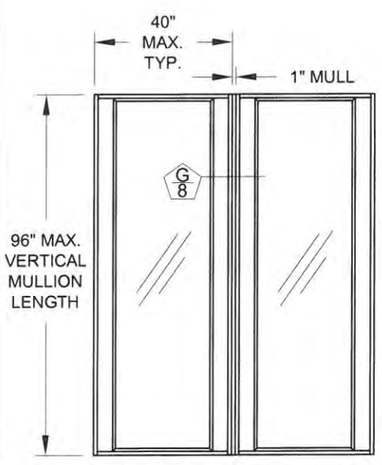

O|O (ADDITIONAL MULLED LITES ALLOWED)
(WIDE STILES AND NARROW RAILS SHOWN ON SIDELITES)

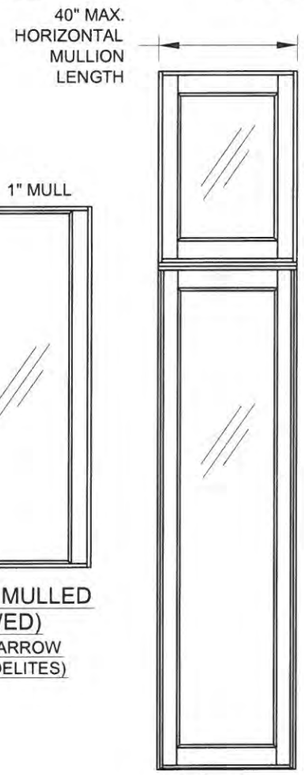

O/O WITH HORIZONTAL MULLION
(WIDE STILES AND WIDE RAILS SHOWN ON SIDELITE & TRANSOM)

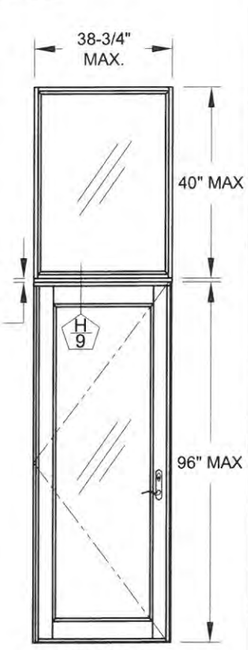

O/X WITH HORIZONTAL MULLION
(NARROW STILES AND NARROW RAILS SHOWN ON TRANSOM)

NOTES:
1) SINGLE DOORS MAY BE LEFT OR RIGHT-HANDED.
2) MULLIONS SHOWN ARE STANDARD 1" FRENCH DOOR MULLIONS PER THIS APPROVAL.
3) MULLED CONFIGURATIONS NOT SHOWN MAY BE POSSIBLE USING OTHER MULLION TYPES
4) FRENCH DOOR MULLION IS LIMITED TO 96" IN VERTICAL APPLICATIONS AND 40" IN HORIZONTAL APPLICATIONS.
5) NARROW OR WIDE STILES AND RAILS MAY BE MIXED WITHIN THE SAME SLT/TR OR MULLED ASSEMBLY.
6) ADDITIONAL CONFIGURATIONS USING THE 1" FRENCH DOOR MULLION ARE POSSIBLE. USE THE ABOVE DRAWINGS AS A REFERENCE FOR SIZE LIMITATIONS.

Rev. 1 | Rev. 2 | Rev. 3

1070 TECHNOLOGY DRIVE
N. VENICE, FL 34275
P.O. BOX 1529
NOKOMIS, FL 34274
(941)-480-1600

Rev.	Drawn By	Date
	J ROSOWSKI	5/29/14

Series	Desc. / Title	Scale	Sheet	DWG No.	Rev.
FD-455	VINYL FRENCH DOOR AND SLT/TR EXAMPLE CONFIGURATIONS	NTS	2 OF 11	TDI-455.1	

STATE OF TEXAS
ANTHONY LYNN MILLER
106954
LICENSED
PROFESSIONAL ENGINEER
9/18/15
A. LYNN MILLER, P.E.
P.E.# 106954

DOOR, SIDELITE & TRANSOM
GLAZING DETAILS

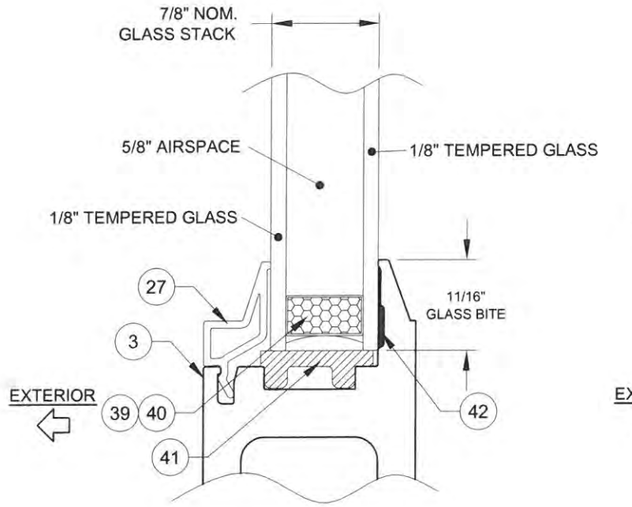

GLASS TYPE 1

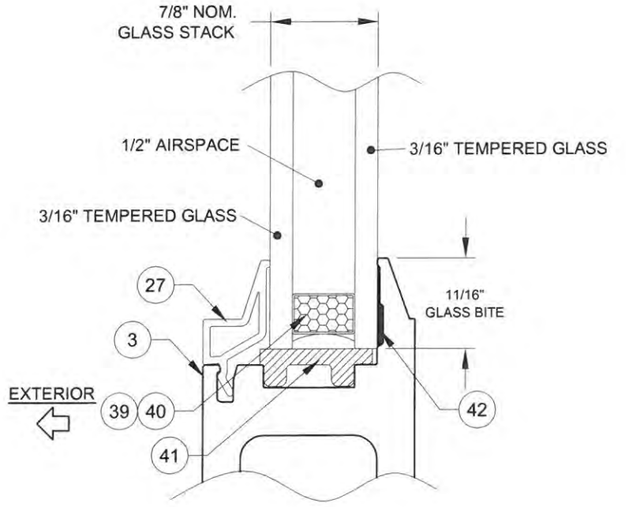

GLASS TYPE 2

Rev.	Date	Drawn By	DWG No.
Rev 1			
Rev 2			
Rev 3	5/29/14	J ROSOWSKI	TDI-455.1

1070 TECHNOLOGY DRIVE
N. VENICE, FL 34275
P.O. BOX 1529
NOKOMIS, FL 34274
(941)-480-1600

Series	Desc.	Sheet	Scale
FD-455	NTS	3 OF 11	

Title: VINYL FRENCH DOOR AND SLT/TR

GLAZING DETAILS

STATE OF TEXAS
ANTHONY LYNN MILLER
106954
LICENSED
PROFESSIONAL ENGINEER

7/18/15

A. LYNN MILLER, P.E.
P.E.# 106954

SINGLE DOOR INSTALLATION (X)

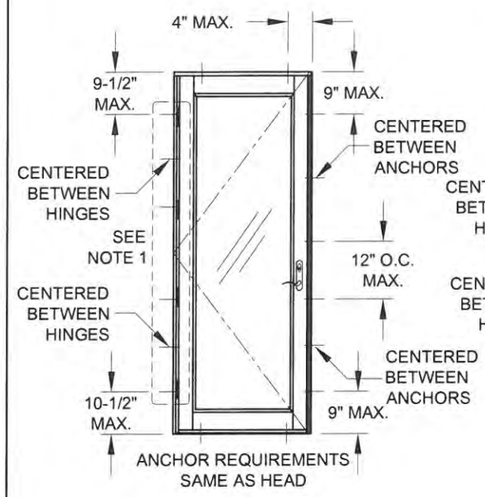

X

DOUBLE DOOR INSTALLATION (XX)

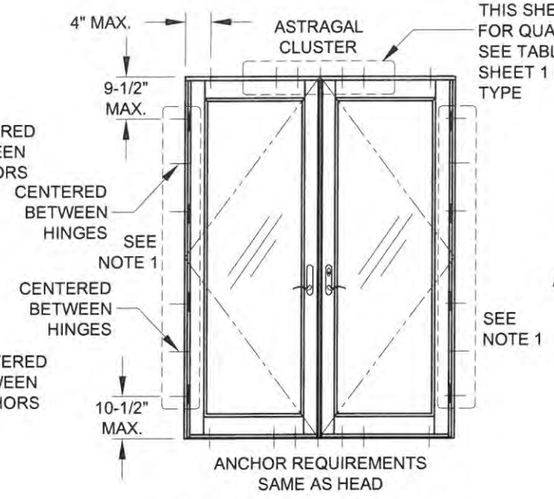

XX, (USING ASTRAGAL)

SIDELITE-TO-SIDELITE MULLION INSTALLATION (O|O, O|O|O, ETC.)

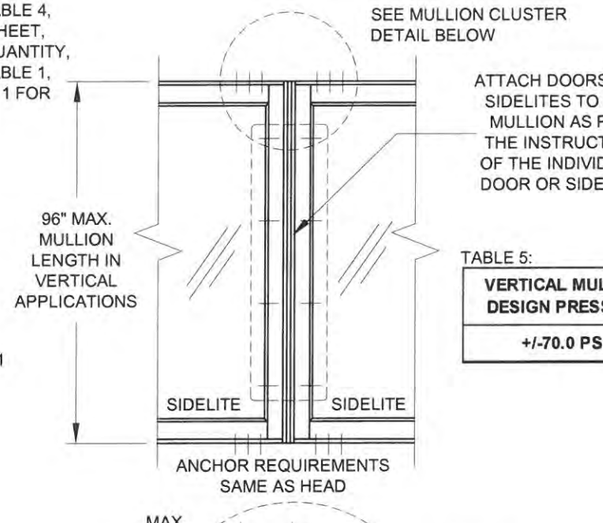

TABLE 5:

VERTICAL MULLION DESIGN PRESSURE
+/-70.0 PSF

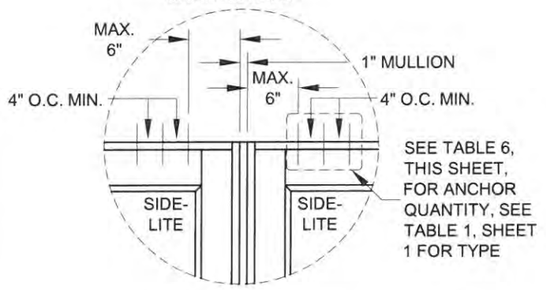

SIDELITE-TO-DOOR MULLION INSTALLATION (X|O, O|X, X|X, O|X|O, X|O|X, O|XX|O, ETC)

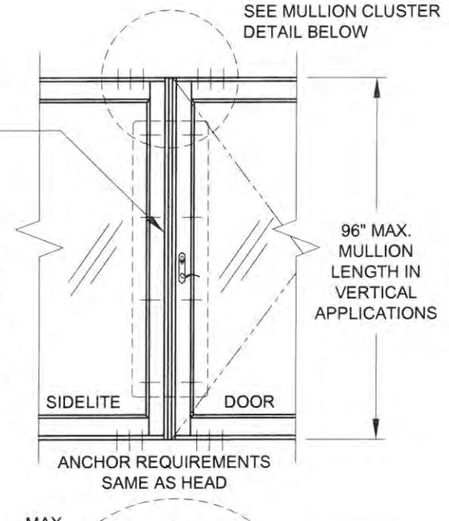

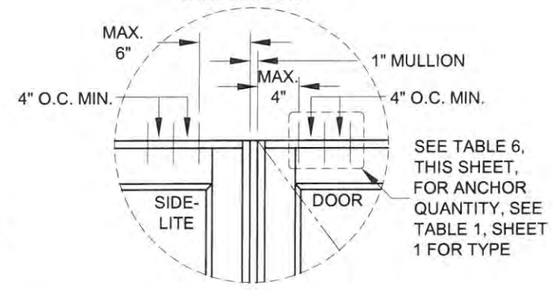

TABLE 3:

DOOR DESIGN PRESSURE	
+/-50.0 PSF	Glass Type 1
+/-70.0 PSF	Glass Type 2

TABLE 4:

XX Door: Astragal Cluster Anchors Required @ Head & Sill								
Door Height (in)	Door Width (in) 48	60		72		76		
	Anchor Group B-D	Anchor Group B	Anchor Group C&D	Anchor Group B	Anchor Group C&D	Anchor Group B	Anchor Group C	Anchor Group D
80	4	4	4	5	4	5	4	4
96	4	5	4	6	4	6	5	4

TABLE 6:

Anchors Required for a Vertical Mullion (each mullion end)												
	Mullion Height (in)	Door or Sidelite/Transom Width (in) 12		24		32			38-3/4			40		
		Anchor Group B-D	Anchor Group B&C	Anchor Group D	Anchor Group B	Anchor Group C	Anchor Group D	Anchor Group B	Anchor Group C	Anchor Group D	Anchor Group B	Anchor Group C	Anchor Group D
Door	80	N/A	2	1	2	2	1	3	2	1	N/A	N/A	N/A
SLT/TR		1	2	1	2	2	1	3	2	1	3	2	1
Door	96	N/A	2	1	3	2	1	3	3	2	N/A	N/A	N/A
SLT/TR		1	2	1	3	2	1	3	3	2	3	3	2

FOR "O|XX|O" AND SIMILAR CONFIGURATIONS CONTAINING A DOUBLE DOOR (XX), USE ONLY HALF OF THE FRAME WIDTH OF THE DOUBLE DOOR WHEN USING THIS TABLE.

TRANSOM-TO-DOOR (X/O) OR TRANSOM-TO-SIDELITE (O/O) MULLION ATTACHMENT& INSTALLATION

ATTACH DOORS, SIDELITES & TRANSOMS TO THE MULLION AS PER THE INSTRUCTION OF THE INDIVIDUAL PRODUCT

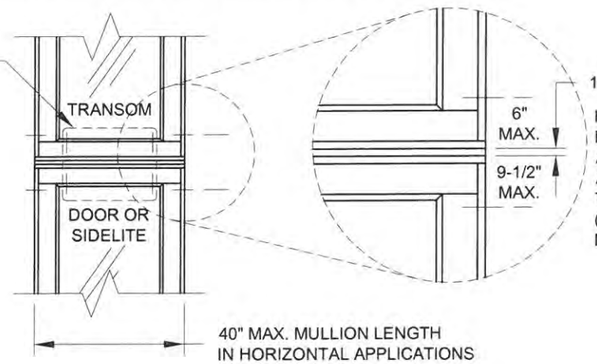

TABLE 7:

HORIZONTAL MULLION DESIGN PRESSURE
+/-70.0 PSF

INSTRUCTIONS:
1) DOOR HINGE JAMBS OF ALL HEIGHTS TO ALWAYS BE ANCHORED WITH SIX ANCHORS. SEE TABLE 1, SHEET 1, FOR ALL APPROVED ANCHORS. FOUR OF THE SIX ANCHORS MUST BE INSTALLED THROUGH THE HINGES, ONE AT EACH HINGE LOCATION (RECOMMENDED #10 FLATHEAD SMS OR 3/16" FLATHEAD ULTRACON FOR EACH HINGE ANCHOR).
2) FOR A MULLED UNIT, DETERMINE THE DESIGN PRESSURE OF EACH COMPONENT IN THAT CONFIGURATION. FOR EXAMPLE, ON AN "X|O" CONFIGURATION, THE DP FOR THE DOOR, THE MULLION AND THE SIDELITE MUST EACH BE DETERMINED. THE LOWEST DP APPLIES TO THE ENTIRE ASSEMBLY.

NOTES:
1) SINGLE DOOR MAY BE LEFT OR RIGHT-HANDED.
2) MULLIONS SHOWN ARE STANDARD 1" FRENCH DOOR MULLIONS.
3) MULLED CONFIGURATIONS NOT SHOWN MAY BE POSSIBLE USING OTHER MULLION TYPES. THE LOWEST COMPONENT DP IS TO BE THE OVERALL ASSEMBLY DP.
4) FRENCH DOOR MULLION IS LIMITED TO 96" IN VERTICAL APPLICATIONS AND 40" IN HORIZONTAL APPLICATIONS.
5) NARROW OR WIDE STILES AND RAILS MAY BE MIXED WITHIN THE SAME SIDELITE/TRANSOM OR MULLED ASSEMBLY.
6) FOR SIZES NOT SHOWN, ROUND UP TO THE NEXT AVAILABLE SHORT OR LONG DIMENSION.

Rev. 3 | Rev. 2 | Rev. 1

PGT®
1070 TECHNOLOGY DRIVE
N. VENICE, FL 34275
P.O. BOX 1529
NOKOMIS, FL 34274
(941)-480-1600

Date	Drawn By	Rev.
5/29/14	J ROSOWSKI	TDI-455.1

Series	Desc. / Title	Scale	Sheet	DWG No.
FD-455	VINYL FRENCH DOOR AND SLT/TR DESIGN PRESSURE 1	NTS	4 OF 11	

STATE OF TEXAS
ANTHONY LYNN MILLER
106954
LICENSED
PROFESSIONAL ENGINEER
9/10/15
A. LYNN MILLER, P.E.
P.E.# 106954

SIDELITE/TRANSOM INSTALLATION (O)

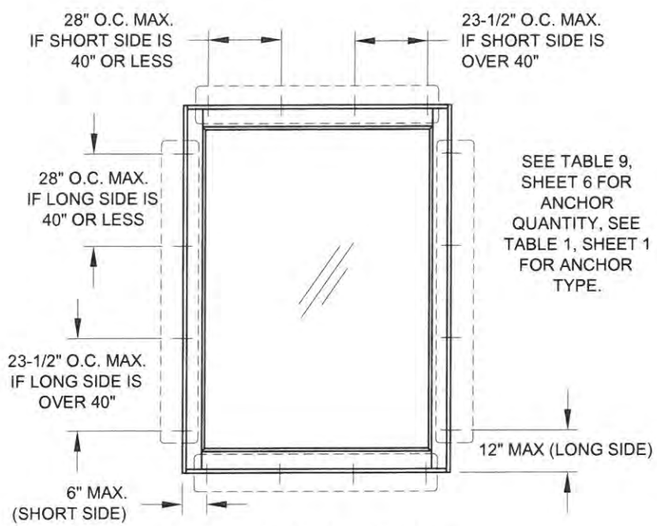

(WIDE STILES AND WIDE RAILS SHOWN ON SIDELITES)

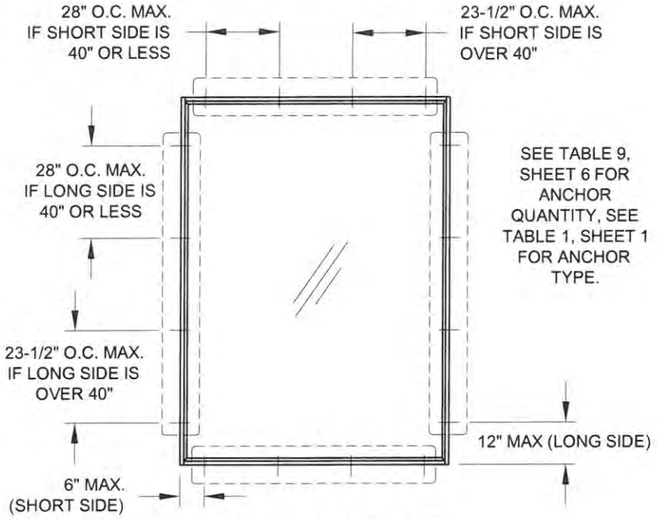

(NARROW STILES AND NARROW RAILS SHOWN ON SIDELITES)

TABLE 8:

WINDOW DESIGN PRESSURE	
+/-70.0 PSF	All Glass Types

NOTES:
1) NARROW OR WIDE STILES AND RAILS MAY BE MIXED WITHIN THE SAME SIDELITE/TRANSOM OR MULLED ASSEMBLY.
2) SIDELITE/TRANSOM MAY BE A SINGLE, STAND-ALONE UNIT.
3) FOR SIZES NOT SHOWN, ROUND UP TO THE NEXT AVAILABLE SHORT OR LONG DIMENSION.

TABLE 9:

			Sidelite/Transom Anchor Quantity																																	
			Long Side (in)																																	
			63-3/16		66-5/8		68		70		72		76		78		82		84		88		92		96		98		104			108		111	
			Anchor Group A	Anchor Groups B-D	Anchor Group A	Anchor Groups B-D	Anchor Group A	Anchor Groups B-D	Anchor Group A	Anchor Groups B-D	Anchor Group A	Anchor Groups B-D	Anchor Group A	Anchor Groups B-D	Anchor Group A	Anchor Groups B-D	Anchor Group A	Anchor Groups B-D	Anchor Group A	Anchor Groups B-D	Anchor Group A	Anchor Groups B-D	Anchor Group A	Anchor Groups B-D	Anchor Group A	Anchor Groups B-D	Anchor Group A	Anchor Groups B-D	Anchor Group A	Anchor Group B	Anchor Groups C-D	Anchor Group A	Anchor Groups B-D	Anchor Group A	Anchor Groups B-D
Short Side (in)	24	Short Side	2	2	2	2	2	2	2	2	2	2	2	2	2	2	2	2	2	2	2	2	2	2	2	2	2	2	2	2	2	2	2	2	2	2
		Long Side	4	4	4	4	4	4	4	4	4	4	4	4	4	4	4	4	5	5	5	5	5	5	5	5	5	5	6	5	5	6	6	6	6
	28	Short Side	2	2	2	2	2	2	2	2	2	2	2	2	2	2	2	2	2	2	2	2	2	2	2	2	2	2	2	2	2	2	2	2	2	2
		Long Side	4	4	4	4	4	4	4	4	4	4	5	4	5	4	5	4	5	5	5	5	6	5	6	5	6	5	6	5	5	7	6	7	6
	32	Short Side	2	2	2	2	2	2	2	2	2	2	2	2	2	2	2	2	2	2	2	2	2	2	2	2	2	2	2	2	2	2	2	2	2	2
		Long Side	4	4	4	4	4	4	4	4	5	4	5	4	5	4	5	4	6	5	6	5	6	5	6	5	7	5	7	5	5	7	6	8	6
	36	Short Side	2	2	2	2	2	2	2	2	2	2	2	2	2	2	2	2	2	2	2	2	2	2	2	2	2	2	2	2	2	2	2	2	2	2
		Long Side	4	4	5	4	5	4	5	4	5	4	5	4	5	4	6	4	6	5	6	5	7	5	7	5	7	5	8	5	5	7	6	8	6
	38-3/4	Short Side	2	2	2	2	2	2	2	2	2	2	2	2	2	2	2	2	2	2	2	2	2	2	2	2	2	2	2	2	2	2	2	2	2	2
		Long Side	4	4	5	4	5	4	5	4	5	4	6	4	6	4	6	4	6	5	7	5	7	5	7	5	8	5	8	5	5	8	6	9	6
	40	Short Side	2	2	2	2	2	2	2	2	2	2	2	2	2	2	2	2	2	2	2	2	2	2	2	2	2	2	2	2	2	2	2	2	2	2
		Long Side	4	4	5	4	5	4	5	4	5	4	6	4	6	4	6	4	6	5	7	5	7	5	8	5	8	5	8	5	5	9	6	9	6

Rev.	Date	Drawn By	DWG No.	Sheet	Scale	Series
	5/29/14	J ROSOWSKI	TDI-455.1	5 OF 11	NTS	FD-455

Rev 1
Rev 2
Rev 3

1070 TECHNOLOGY DRIVE
N. VENICE, FL 34275
P.O. BOX 1529
NOKOMIS, FL 34274
(941)-480-1600

Title: VINYL FRENCH DOOR AND SLT/TR
Desc.: SLT/TR ANCHOR QUANTITIES

STATE OF TEXAS
ANTHONY LYNN MILLER
106954
LICENSED
PROFESSIONAL ENGINEER
9/18/15
A. LYNN MILLER, P.E.
P.E.# 106954

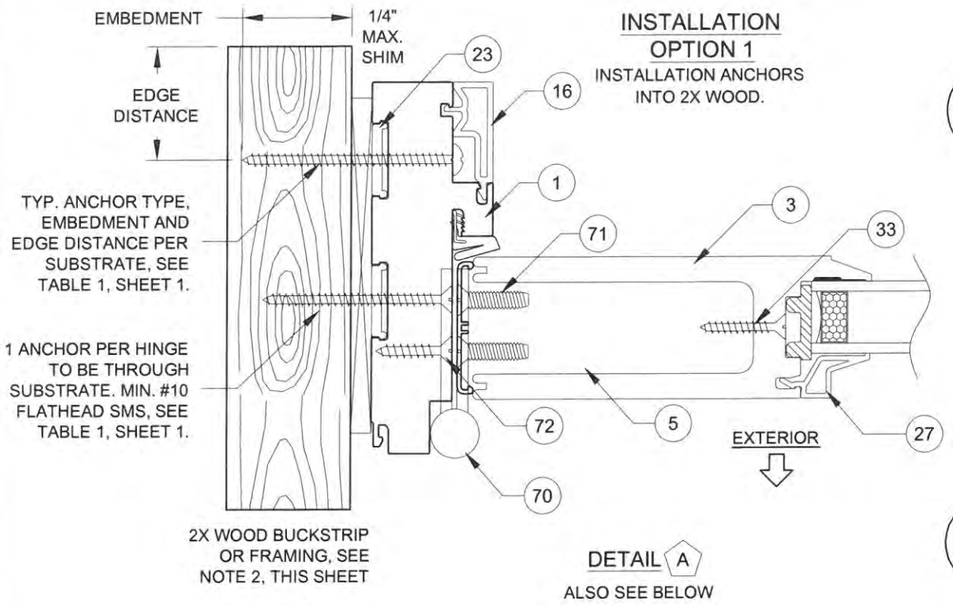

INSTALLATION OPTION 1
INSTALLATION ANCHORS INTO 2X WOOD.

DETAIL A
ALSO SEE BELOW

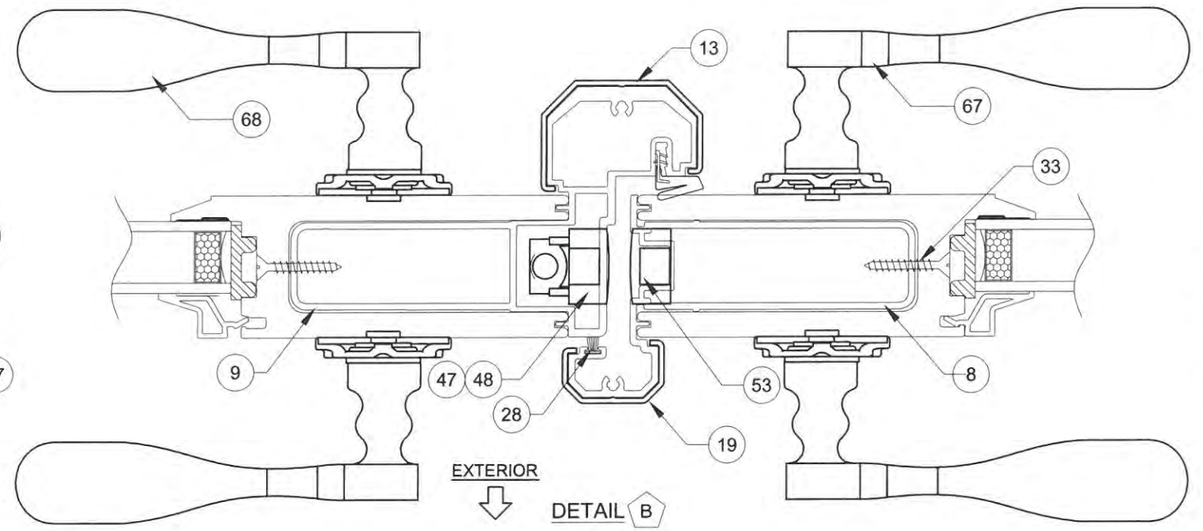

DETAIL B

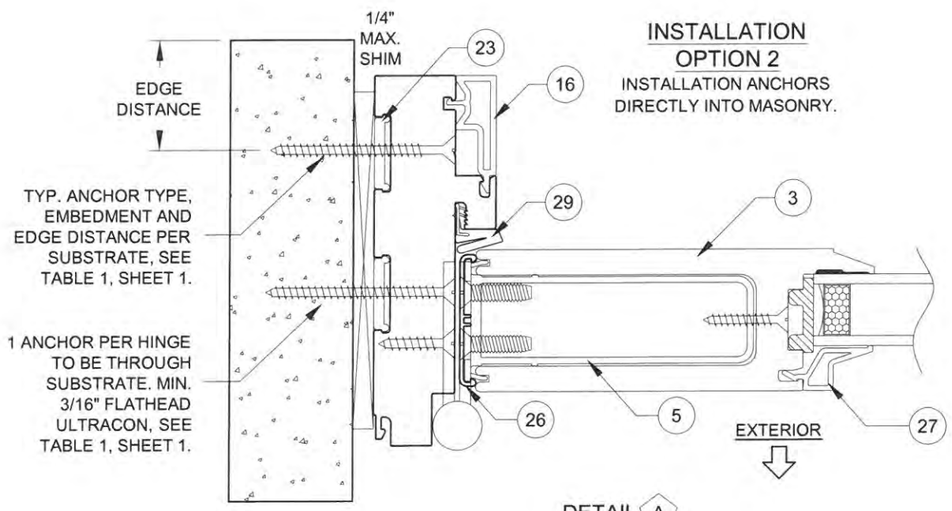

INSTALLATION OPTION 2
INSTALLATION ANCHORS DIRECTLY INTO MASONRY.

DETAIL A
ALSO SEE ABOVE

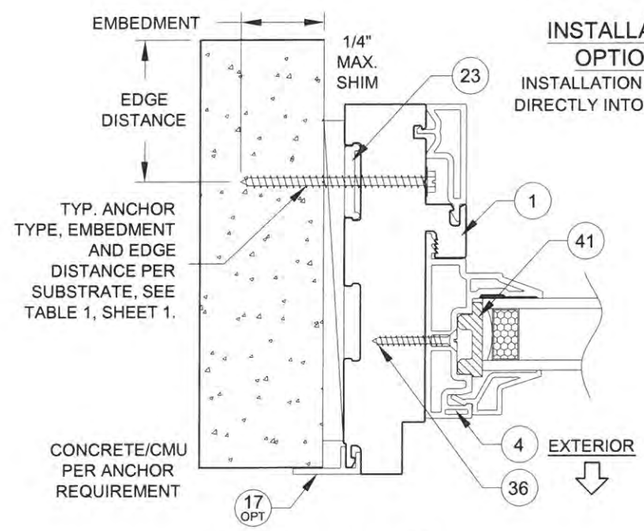

INSTALLATION OPTION 2
INSTALLATION ANCHORS DIRECTLY INTO MASONRY.

DETAIL C

INSTALLATION NOTES:

1) USE ONLY SUBSTRATE-APPROPRIATE ANCHORS LISTED ON TABLE 1, SHEET 1. FOLLOW EMBEDMENT AND EDGE DISTANCE LIMITS. ANY INSTALLATION OPTION SHOWN MAY BE USED ON ANY SIDE OF THE DOOR, SIDELITE OR TRANSOM.
2) WOOD BUCKS DEPICTED ON THIS SHEET AS "1X", ARE BUCKS WHOSE TOTAL THICKNESS IS LESS THAN 1-1/2". 1X WOOD BUCKS ARE OPTIONAL IF UNIT CAN BE INSTALLED DIRECTLY TO MASONRY. WOOD BUCKS DEPICTED AS "2X" ARE 1-1/2" THICK OR GREATER. INSTALLATION TO THE SUBSTRATE OF WOOD BUCKS TO BE ENGINEERED BY OTHERS OR AS APPROVED BY THE AUTHORITY HAVING JURISDICTION.
3) FOR ATTACHMENT TO METAL: THE STRUCTURAL MEMBER SHALL BE OF A SIZE TO PROVIDE FULL SUPPORT TO THE FRAME OF THE DOOR, SIDELITE OR TRANSOM.
4) IF APPLICABLE, LOWEST DESIGN PRESSURE FROM DOOR, SIDELITE, TRANSOM OR MULLION APPLIES TO THE WHOLE SYSTEM.

Rev 3	Rev 2	Rev 1

1070 TECHNOLOGY DRIVE
N. VENICE, FL 34275
P.O. BOX 1529
NOKOMIS, FL 34274
(941)-480-1600

Title	Date	Drawn By	Rev.
VINYL FRENCH DOOR AND SLT/TR	5/29/14	J ROSOWSKI	

Desc.	Sheet	DWG No.	Series
INSTALLATION 1	6 OF 11	TDI-455.1	FD-455

STATE OF TEXAS
ANTHONY LYNN MILLER
106954
LICENSED
PROFESSIONAL ENGINEER

9/18/15

A. LYNN MILLER, P.E.
P.E.# 106954

TYP. ANCHOR TYPE, EMBEDMENT AND EDGE DISTANCE PER SUBSTRATE, SEE TABLE 1, SHEET 1. MAX. 18" O.C.

1 ANCHOR PER HINGE TO BE THROUGH SUBSTRATE. MIN. #10 FLATHEAD SMS WITH MIN. 3 THREADS BEYOND METAL SUBSTRATE.

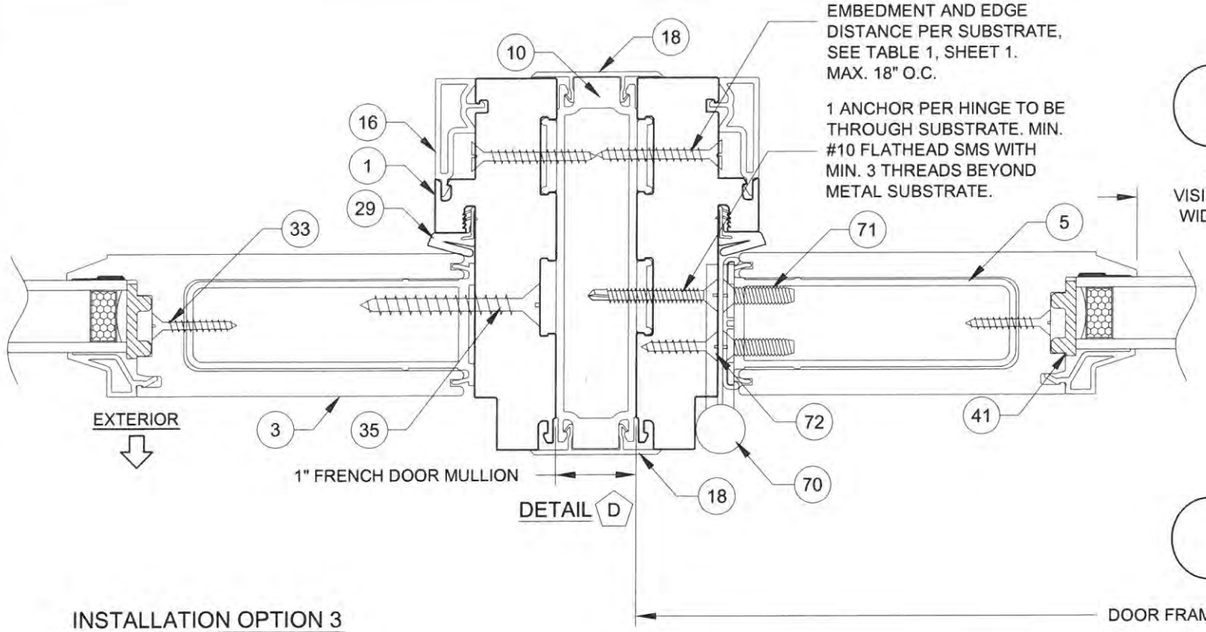

DETAIL D

INSTALLATION OPTION 4

INSTALLATION ANCHORS DIRECTLY INTO METAL.

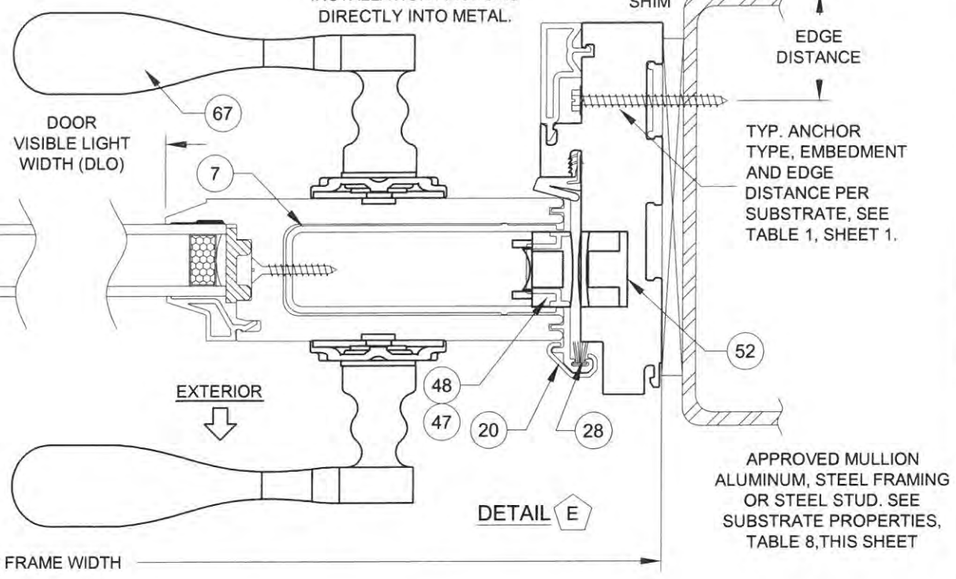

DETAIL E

DOOR FRAME WIDTH

INSTALLATION OPTION 3

INSTALLATION ANCHORS THROUGH 1X BUCKSTRIP INTO MASONRY.

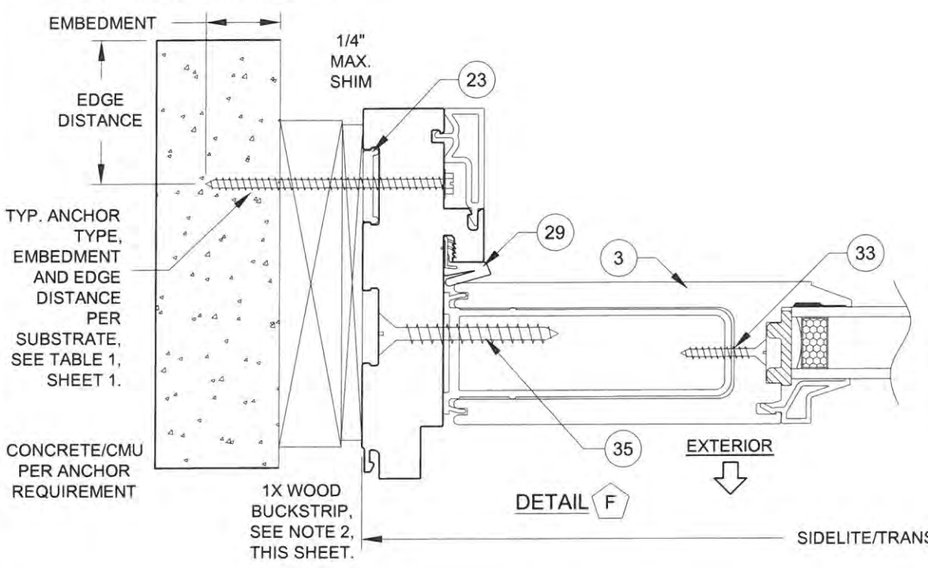

DETAIL F

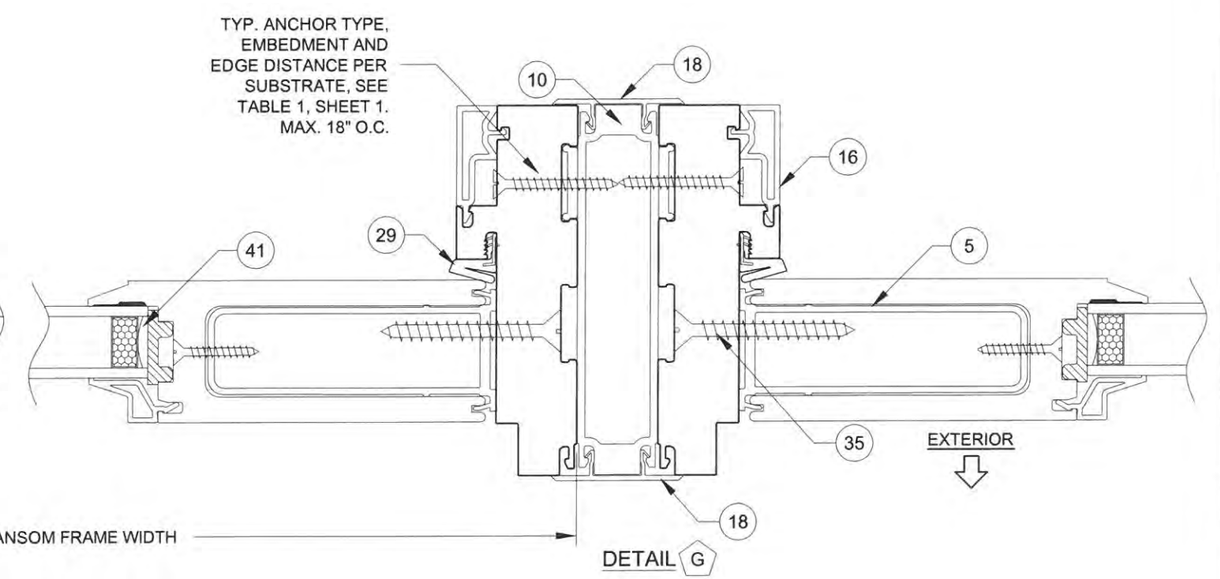

DETAIL G

SIDELITE/TRANSOM FRAME WIDTH

INSTALLATION NOTES:

1) USE ONLY SUBSTRATE-APPROPRIATE ANCHORS LISTED ON TABLE 1, SHEET 1. FOLLOW EMBEDMENT AND EDGE DISTANCE LIMITS. ANY INSTALLATION OPTION SHOWN MAY BE USED ON ANY SIDE OF THE DOOR, SIDELITE OR TRANSOM.
2) WOOD BUCKS DEPICTED ON THIS SHEET AS "1X", ARE BUCKS WHOSE TOTAL THICKNESS IS LESS THAN 1-1/2". 1X WOOD BUCKS ARE OPTIONAL IF UNIT CAN BE INSTALLED DIRECTLY TO MASONRY. WOOD BUCKS DEPICTED AS "2X" ARE 1-1/2" THICK OR GREATER. INSTALLATION TO THE SUBSTRATE OF WOOD BUCKS TO BE ENGINEERED BY OTHERS OR AS APPROVED BY THE AUTHORITY HAVING JURISDICTION.
3) FOR ATTACHMENT TO METAL: THE STRUCTURAL MEMBER SHALL BE OF A SIZE TO PROVIDE FULL SUPPORT TO THE FRAME OF THE DOOR, SIDELITE OR TRANSOM.
4) IF APPLICABLE, LOWEST DESIGN PRESSURE FROM DOOR, SIDELITE, TRANSOM OR MULLION APPLIES TO THE WHOLE SYSTEM.

Rev.	Date	Drawn By	DWG No.	Sheet	Scale	Series	Desc.	Title
Rev 1								
Rev 2								
Rev 3								
	5/29/14	J ROSOWSKI	TDI-455.1	7 OF 11	NTS	FD-455	INSTALLATION 2	VINYL FRENCH DOOR AND SLT/TR

PGT®
1070 TECHNOLOGY DRIVE
N. VENICE, FL 34275
P.O. BOX 1529
NOKOMIS, FL 34274
(941)-480-1600

STATE OF TEXAS
ANTHONY LYNN MILLER
106954
LICENSED
PROFESSIONAL ENGINEER

9/18/15

A. LYNN MILLER, P.E.
P.E.# 106954

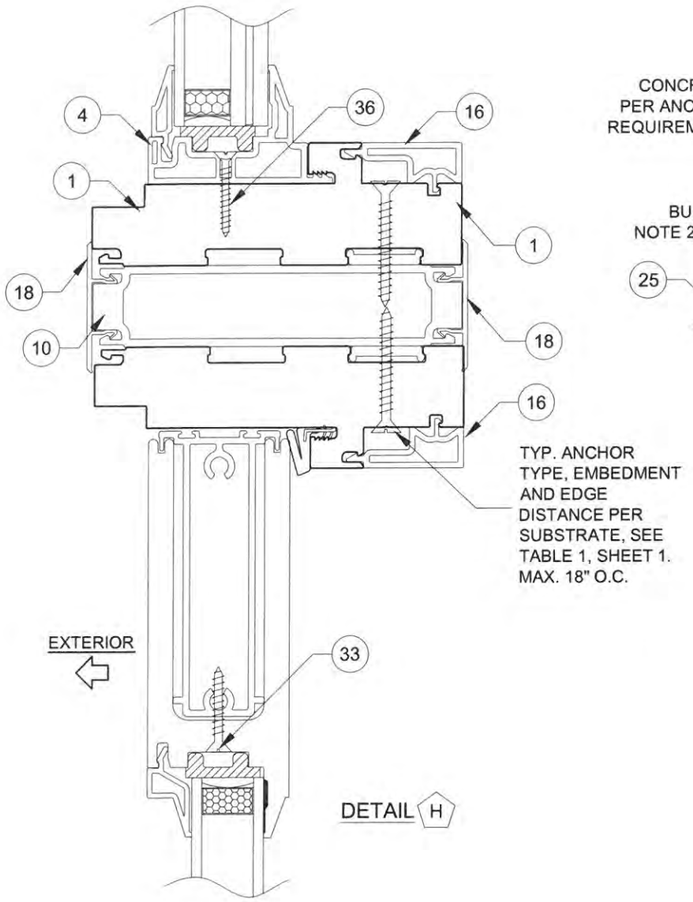

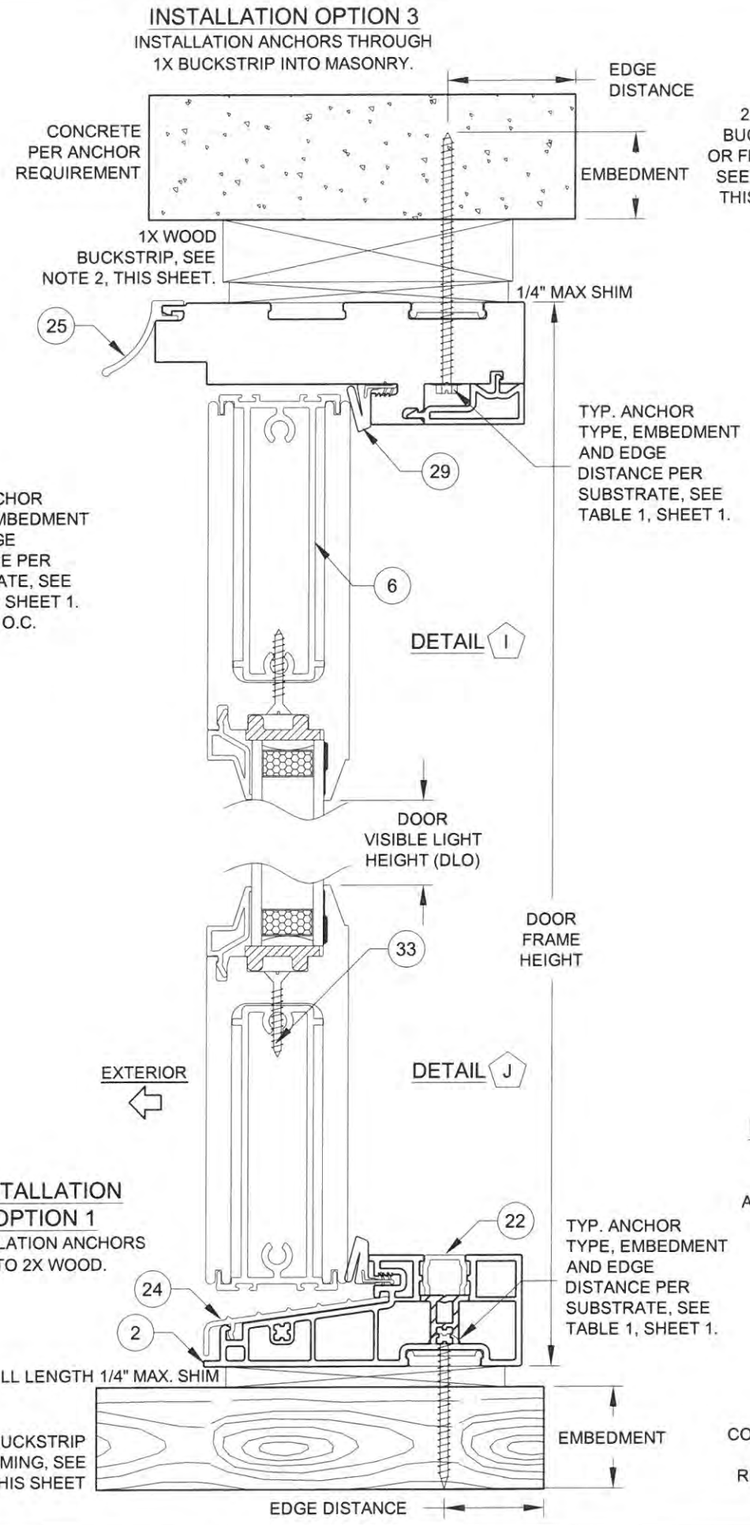

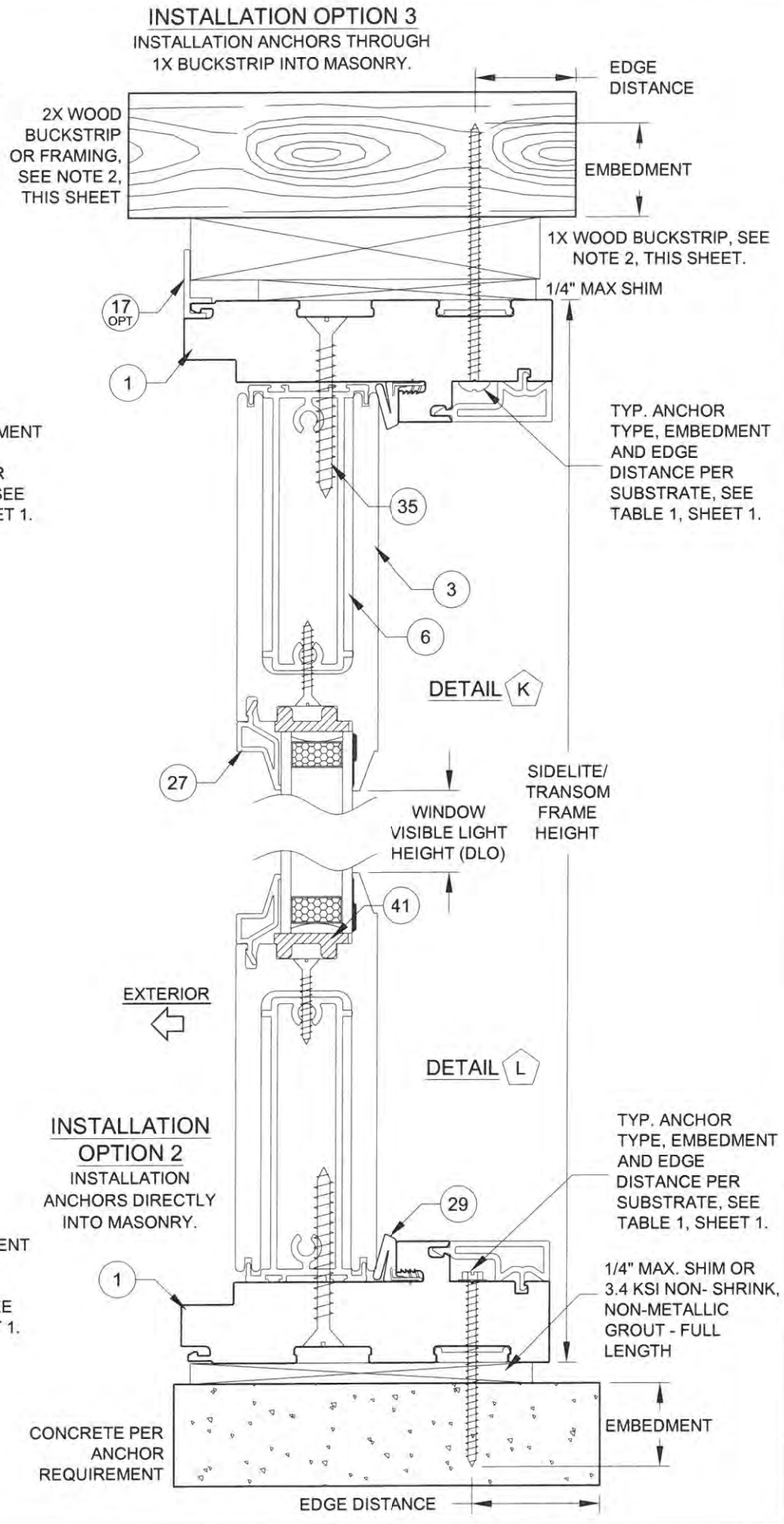

INSTALLATION NOTES:

1) USE ONLY SUBSTRATE-APPROPRIATE ANCHORS LISTED ON TABLE 1, SHEET 1. FOLLOW EMBEDMENT AND EDGE DISTANCE LIMITS. ANY INSTALLATION OPTION SHOWN MAY BE USED ON ANY SIDE OF THE DOOR, SIDELITE OR TRANSOM.

2) WOOD BUCKS DEPICTED ON THIS SHEET AS "1X", ARE BUCKS WHOSE TOTAL THICKNESS IS LESS THAN 1-1/2". 1X WOOD BUCKS ARE OPTIONAL IF UNIT CAN BE INSTALLED DIRECTLY TO MASONRY. WOOD BUCKS DEPICTED AS "2X" ARE 1-1/2" THICK OR GREATER. INSTALLATION TO THE SUBSTRATE OF WOOD BUCKS TO BE ENGINEERED BY OTHERS OR AS APPROVED BY THE AUTHORITY HAVING JURISDICTION.

3) FOR ATTACHMENT TO METAL: THE STRUCTURAL MEMBER SHALL BE OF A SIZE TO PROVIDE FULL SUPPORT TO THE FRAME OF THE DOOR, SIDELITE OR TRANSOM.
4) IF APPLICABLE, LOWEST DESIGN PRESSURE FROM DOOR, SIDELITE, TRANSOM OR MULLION APPLIES TO THE WHOLE SYSTEM.

Rev.	Date	Drawn By	DWG No.	Sheet	Scale	Desc.	Series
Rev 1							
Rev 2							
Rev 3							
	5/29/14	J ROSOWSKI	TDI-455.1	8 OF 11	NTS	INSTALLATION 3	FD-455

1070 TECHNOLOGY DRIVE
N. VENICE, FL 34275
P.O. BOX 1529
NOKOMIS, FL 34274
(941)-480-1600

VINYL FRENCH DOOR AND SLT/TR

PGT®

STATE OF TEXAS
ANTHONY LYNN MILLER
106954
LICENSED PROFESSIONAL ENGINEER
9/18/15
A. LYNN MILLER, P.E.
P.E.# 106954

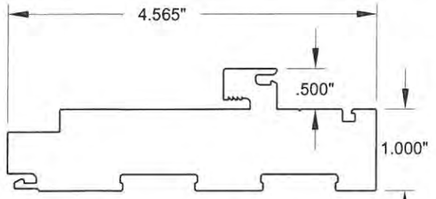

1 FRAME HEAD & JAMB
#20000, Cellular PVC

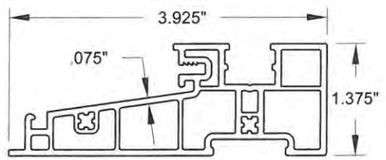

2 FRAME SILL
#20001, Rigid PVC

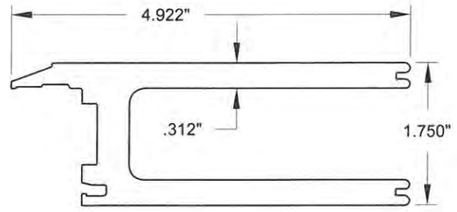

3 PANEL RAIL & STILE
#20002, Cellular PVC

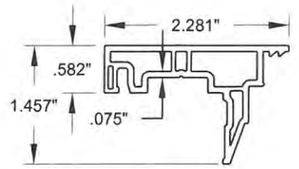

4 SIDELITE ADAPTER
#20003, Rigid PVC

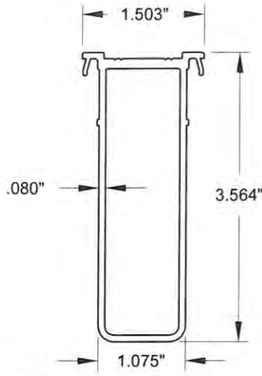

5 HINGE STILE REINFORCEMENT
#20013, 6063-T6

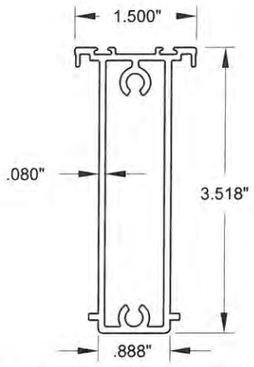

6 TOP & BOTTOM RAIL REINFORCEMENT
#20014, 6063-T6

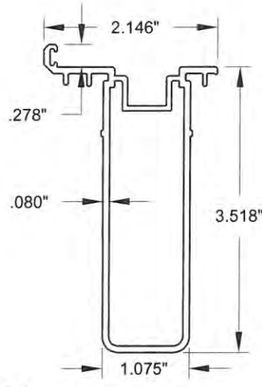

7 PANEL STILE REINFORCEMENT
#20015, 6063-T6

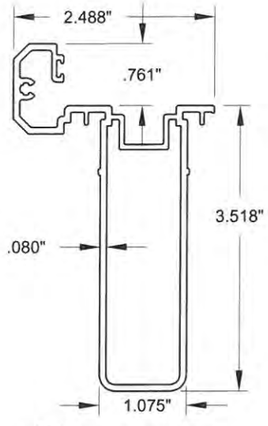

8 ACTIVE ASTRAGAL
#20016, 6063-T6

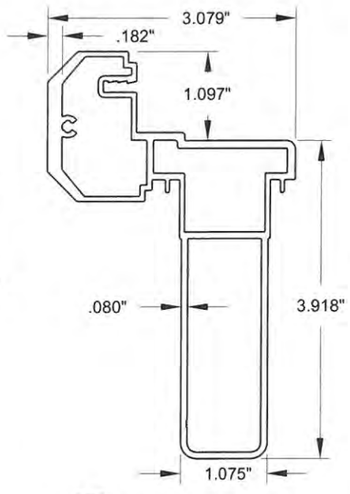

9 INACTIVE ASTRAGAL
#20017, 6063-T6

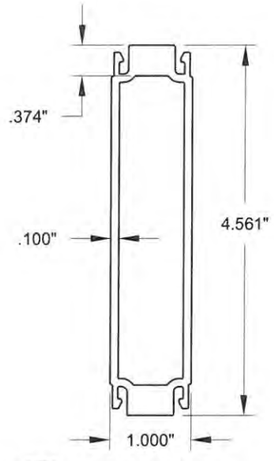

10 1" FRENCH DOOR MULLION
#20022, 6063-T6

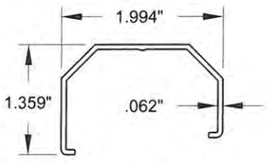

13 INACTIVE ASTRAGAL COVER
#20004, Rigid PVC

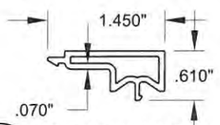

16 FRAME SCREW COVER
#20007, Rigid PVC

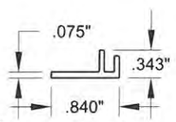

17 ADD-ON FIN/FLANGE
#20008, Rigid PVC

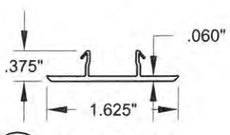

18 1" MULLION CAP
#20009, Rigid PVC

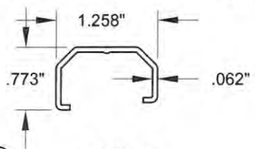

19 ACTIVE ASTRAGAL COVER
#20011, Rigid PVC

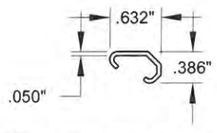

20 SINGLE DOOR ASTRAGAL COVER
#20012, Rigid PVC

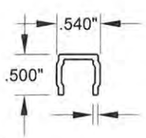

22 SILL CAP
#19009, Rigid PVC

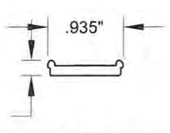

23 ANCHOR PLATE
#19031, 6063-T6

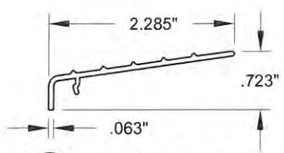

24 THRESHOLD CAP
#20020, 6063-T6

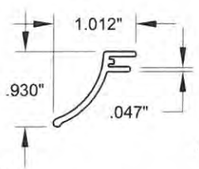

25 DRIP CAP
#20021, 6063-T6

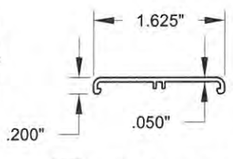

26 HINGE TRIM COVER
#20023, Rigid PVC

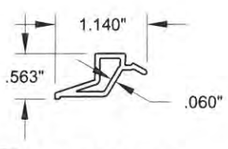

27 7/8" BEVELED BEAD
#20024, Rigid PVC

Rev. 3 | Rev. 2 | Rev. 1

1070 TECHNOLOGY DRIVE
N. VENICE, FL 34275
P.O. BOX 1529
NOKOMIS, FL 34274
(941)-480-1600

Title	Desc.	Series
VINYL FRENCH DOOR AND SLT/TR	EXTRUSIONS	FD-455

Scale	Sheet	DWG No.	Drawn By	Date	Rev.
NTS	9 OF 11	TDI-455.1	J ROSOWSKI	5/29/14	

STATE OF TEXAS
ANTHONY LYNN MILLER
106954
LICENSED
PROFESSIONAL ENGINEER
9/18/15

A. LYNN MILLER, P.E.
P.E.# 106954

TABLE 10:

#	PGT Part #	Description	Material
1	20000	Door & Sidelite/Transom Main Frame	Cellular PVC
2	20001	Door Frame Sill	Rigid PVC
3	20002	Panel Stile & Rail	Cellular PVC
4	20003	Sidelite Adapter	Rigid PVC
5	20013	Hinge Stile Reinforcement	Alum., 6063-T6
6	20014	Panel Rail Reinforcement	Alum., 6063-T6
7	20015	Panel Stile Reinforcement	Alum., 6063-T6
8	20016	Active Astragal	Rigid PVC
9	20017	Inactive Astragal	Rigid PVC
10	20022	1" French Door Mullion	Alum., 6063-T6
13	20004	Inactive Astragal Cover	Rigid PVC
16	20007	Screw Cover	Rigid PVC
17	20008	Add-on Fin/Flange	Rigid PVC
18	20009	1" Mullion Cap	Rigid PVC
19	20011	Active Astragal Cover	Rigid PVC
20	20012	Single Door Astragal Cover	Rigid PVC
22	20018	Sill Screw Cover	Rigid PVC
23	19031	Anchor Plate	Alum., 6063-T6
24	20020	Threshold Cover	Alum., 6063-T6
25	20021	Drip Cap	Rigid PVC
26	20023	Hinge Trim Cover	Rigid PVC
27	20024	7/8" Beveled Bead	Rigid PVC
28		Fin Weatherstrip	
29	1671/3	Frame Weatherstrip	
31	714FPT410XW	Frame-to-Wide Slab Screw: #14 X 1-1/2" Phil. FH	Stainless Steel
32	7S101X	Frame-to-Narrow Slab Screw: #10 X 1" Phil. FH	Stainless Steel
33	78X1FPT410	Reinforcement Screw: #8 X 1" Phil. FH	Stainless Steel
34	710X2FPAX	Frame Assembly Screw: #10 X 2" Phil. FH	Stainless Steel
35	714FPT410XW	W-W Slab Assembly Screw: #14 X 1-1/2" Phil. FH	Stainless Steel
36	7S101X	N-N Slab Assembly Screw: #10 X 1" Phil. FH	Stainless Steel
37	71420X2.25	N-W Slab Assembly Screw: #14 X 2-1/4" Phil. FH	Stainless Steel
39		DuraSeal Spacer	
40	62689	SuperSpacer	
41	720026	Setting Block, (Duro.=85 +/- 5)	EPDM
42		Backbedding: Dow-995 or GE-7700	Silicone
43		Argon Gas	
44	6HL5140	Hot Melt Butyl	
47 - 73 see Hardware BOM, Table 9, Sheet 12			
90	20033	Inactive Astragal Cap	Acetal

DAYLITE OPENING (DLO) SIZES

WHEN USING PART # 3: (WIDE RAILS OR STILES)
X DOOR FRAME HEIGHT- 12.1 = DLO HEIGHT
X DOOR FRAME WIDTH - 12.3 = DLO WIDTH
(XX DOOR FRAME HEIGHT / 2) - 12.1 = DLO HEIGHT
(XX DOOR FRAME WIDTH / 2) - 11.7 = DLO WIDTH
SLT/TR FRAME HEIGHT- 12.1 = DLO HEIGHT
SLT/TR FRAME WIDTH - 12.1 = DLO WIDTH

WHEN USING PART # 4: (NARROW RAILS OR STILES)
SLT/TR FRAME HEIGHT- 4.9 = DLO HEIGHT
SLT/TR FRAME WIDTH - 4.9 = DLO WIDTH

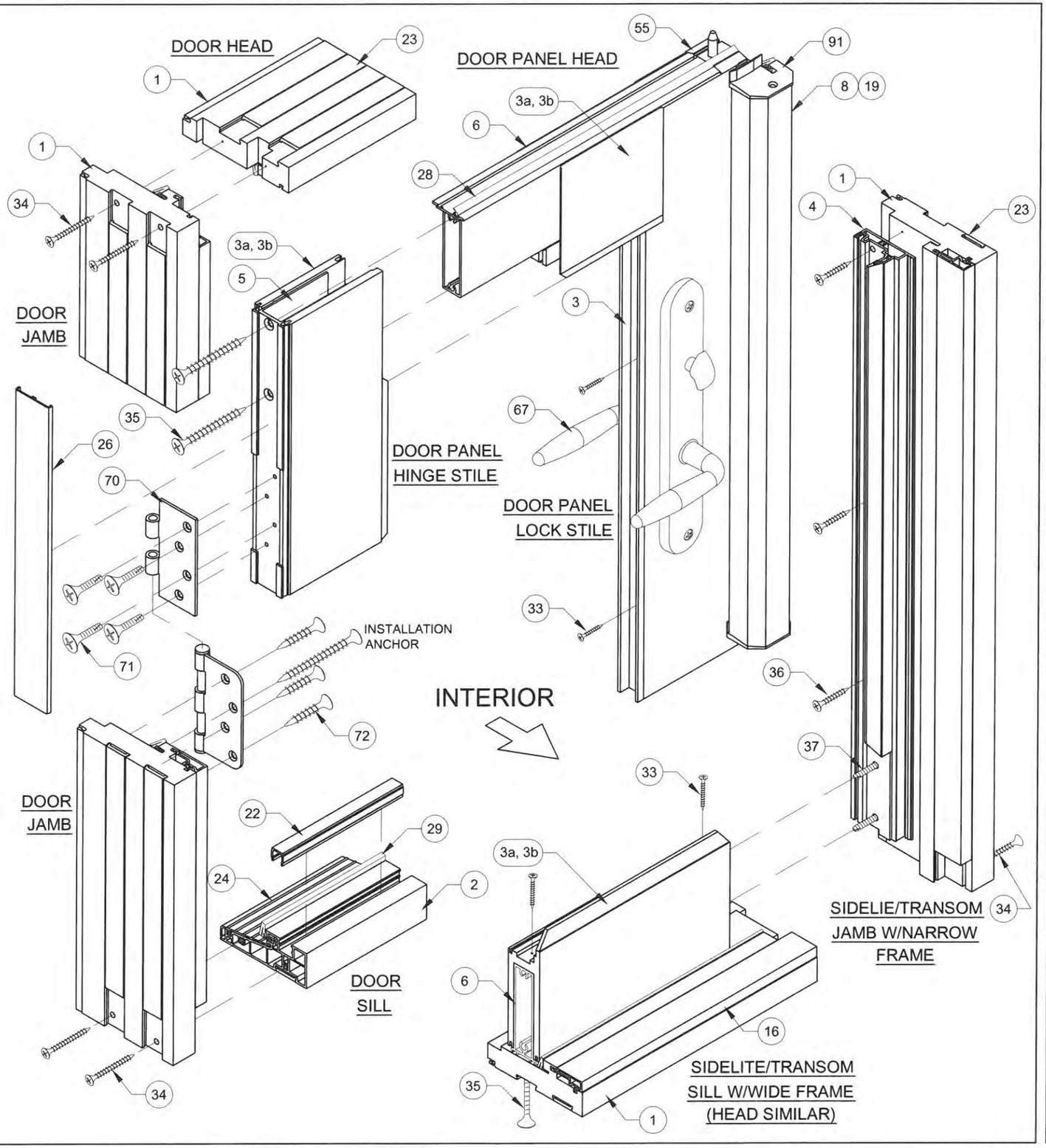

Rev.	Date	Drawn By	DWG No.
	5/29/14	J ROSOWSKI	TDI-455.1

1070 TECHNOLOGY DRIVE
N. VENICE, FL 34275
P.O. BOX 1529
NOKOMIS, FL 34274
(941)-480-1600

Series	Desc.	Title	Scale	Sheet
FD-455	CORNER DETAILS AND BOM	VINYL FRENCH DOOR AND SLT/TR	NTS	10 OF 11

STATE OF TEXAS
ANTHONY LYNN MILLER
106954
LICENSED
PROFESSIONAL ENGINEER
9/18/15
A. LYNN MILLER, P.E.
P.E.# 106954

HARDWARE DETAILS & LOCATIONS

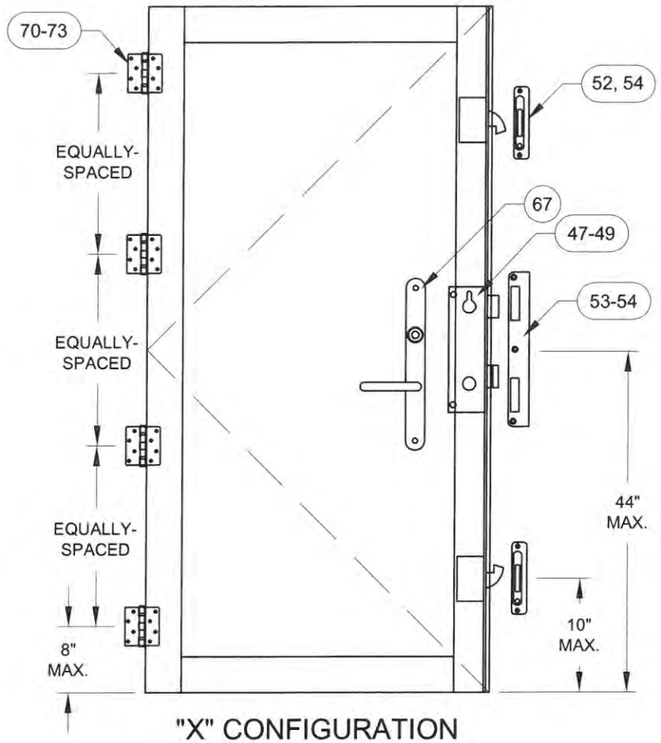

"X" CONFIGURATION

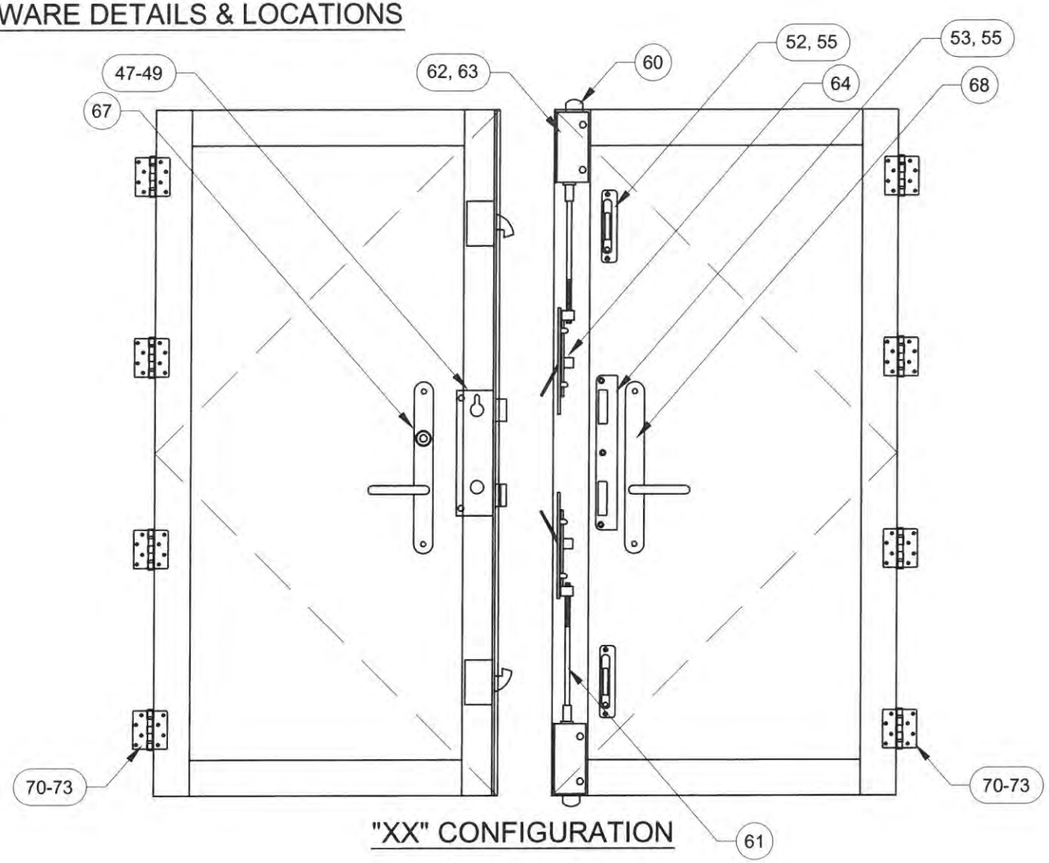

"XX" CONFIGURATION

TABLE 11:

#	PGT Part #	Description	Material
47	666032701	P3000 3-PT Rhino Lock (6'8")	
48	666032702	P3000 3-PT Rhino Lock (over 6'8")	
49	71032X1FPFX	Rhino Lock Screw: 10-32 X 1" Phil. FH	
52	20027	Adjustable Strike Plate Assembly	Stainless Steel
53	20028	Center Strike Plate Assembly	Stainless Steel
54	7S101X	Strike Plate Screw, (X): #10 X 1" Phil. FH	410 S.S.
55	78X12PFHUX	Strike Plate Screw, (XX): #8 X 1/2" Phil. FH	410 S.S.
60	7SB1202	Flush Bolt (XX)	
61	7803725	Flush Bolt Rod (XX)	
62	420034	Flush Bolt Guides (XX)	
63	7832X12FPXP	Flush Bolt Screw: 8-32 X 1/2" Phil. FH	
64	48033N	Guide Pin (XX)	
65	78036	Flush Bolt Strike Plate (XX)	Stainless Steel
66	7832X12FPXP	Flush Bolt Strike Plate Screw, (XX): #8 X 3/4" Phil. FH	410 S.S.
67	varies	Handle/Lever	
68	varies	Dummy Handle/Lever	
70	20025	Butt Hinge	Stainless Steel
71	71032X1FPFX	Hinge, Slab Screw: #10-32 X 1" Phil FH	Stainless Steel
72	7S101X	Hinge, Frame Screw: #10 X 1" Phil. FH	Stainless Steel

HINGE DETAIL:

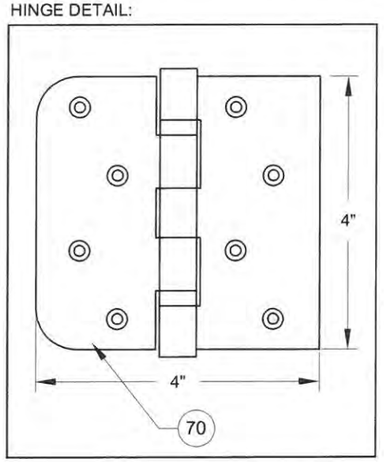

Rev.	Rev. 1	Rev. 2	Rev. 3

1070 TECHNOLOGY DRIVE
N. VENICE, FL 34275
P.O. BOX 1529
NOKOMIS, FL 34274
(941)-480-1600

Rev.	DWG No.	Sheet	Scale	Series	Desc.	Title
	TDI-455.1	11 OF 11	NTS	FD-455	DESIGN PRESSURE TABLES 3	VINYL FRENCH DOOR AND SLT/TR

Date	Drawn By
5/29/14	J ROSOWSKI

STATE OF TEXAS
ANTHONY LYNN MILLER
106954
LICENSED
PROFESSIONAL ENGINEER

9/18/15

A. LYNN MILLER, P.E.
P.E.# 106954