Dunbarton CORPORATION
868 MURRAY ROAD DOTHAN, AL 36303

"REDIFLEX"
TWO-PIECE STEEL FRAME SYSTEM UTILIZING A JELD-WEN DOUBLE OPAQUE STEEL DOOR "IMPACT"

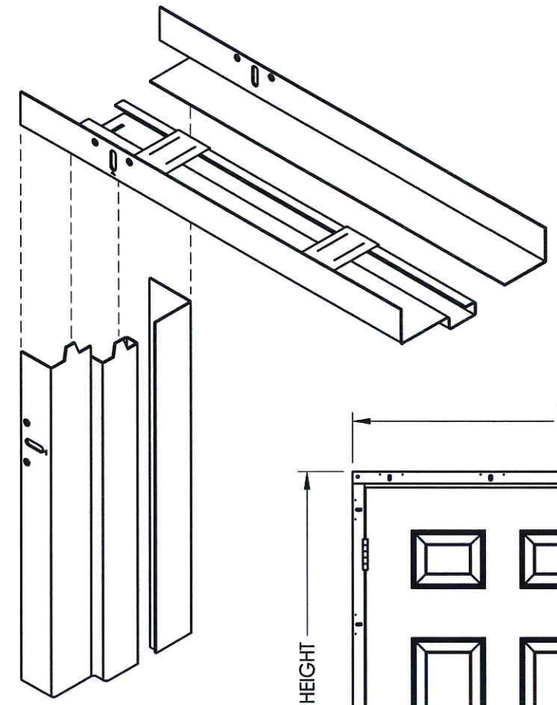

REDIFLEX TWO-PIECE

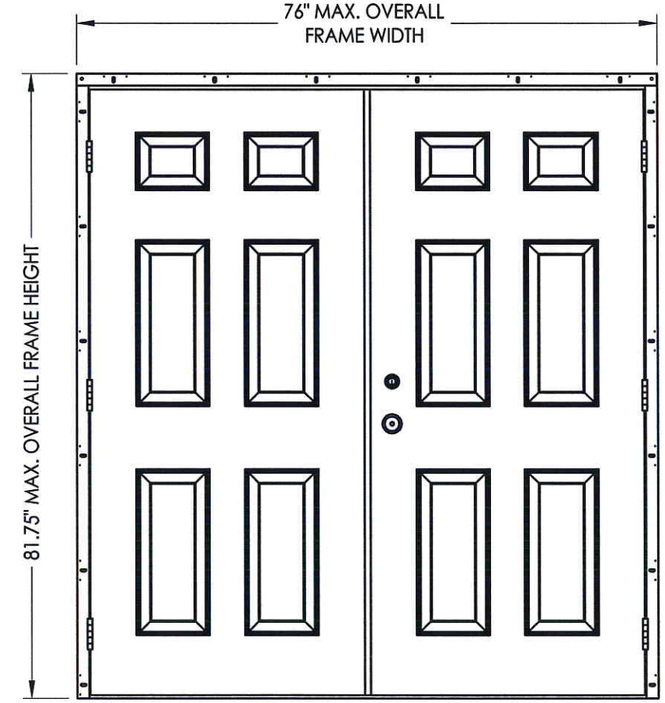

OUTSWING

EVALUATED FOR USE IN THE STATE OF TEXAS

The Door System described herein complies with the 2006 International Residential Code (IRC), Sections R301 & R613 and the 2006 International Building Code (IBC), Sections 1405.12, 1609, 1714.5, 2403 and 2404 (including Texas revisions) subject to the following conditions:

1. Anchors shall be as listed and spaced as shown in the details. Anchor embedment to base material shall be beyond wall dressing or stucco.
2. This system has been tested and evaluated as a large missile impact protective system for installation in the Seaward, Inland I and Inland II areas. This product meets missile level "D" as defined in ASTM E 1996.
3. Allowable design pressure requirements must be equal to or less than the design pressure rating shown in the design pressure chart, sheet 1 of this drawing.
4. Conditions not covered by this drawing are subject to further engineering analysis.

OVERALL FRAME DIMENSION	DESIGN PRESSURE (PSF)	
	POSITIVE	NEGATIVE
76.0" X 81.75"	+ 55.0	- 55.0

TABLE OF CONTENTS

SHEET #	DESCRIPTION
1	Typical elevation, design pressures & general notes
2	Steel frame cross sections & details
3	Door panel details
4	Horizontal cross sections
5	Vertical cross sections
6	Frame anchoring
7	Astragal details
8	Bill of materials and components

STATE OF TEXAS LYNDON F. SCHMIDT 104123 LICENSED PROFESSIONAL ENGINEER
9-18-13

Documents Prepared By: Lyndon F. Schmidt, P.E. TEXAS P.E. #104123
RW BUILDING CONSULTANTS, INC.
P.O. Box 230 Valrico FL. 33595
Phone No.: 813.659.9197
TEXAS BOARD OF PROFESSIONAL ENGINEERS CERTIFICATE OF REGISTRATION # F-11852

PRODUCT: DUNBARTON REDIFLEX TWO-PIECE STEEL FRAME

PART OR ASSEMBLY: TYPICAL ELEVATION, DESIGN PRESSURES & GENERAL NOTES

NO.	DATE	REVISIONS	BY

DATE: 7/9/13
SCALE: N.T.S.
DWG. BY: JK
CHK. BY: LFS
DRAWING NO.: TX-4353
SHEET 1 OF 8

© 2013 R.W. BUILDING CONSULTANTS INC.

R:\A - Projects\Project Folders\Proj 1601 - 1700\PF 1650\D. RWBC Drawings\TX-4338-41.dwg, TX-4353

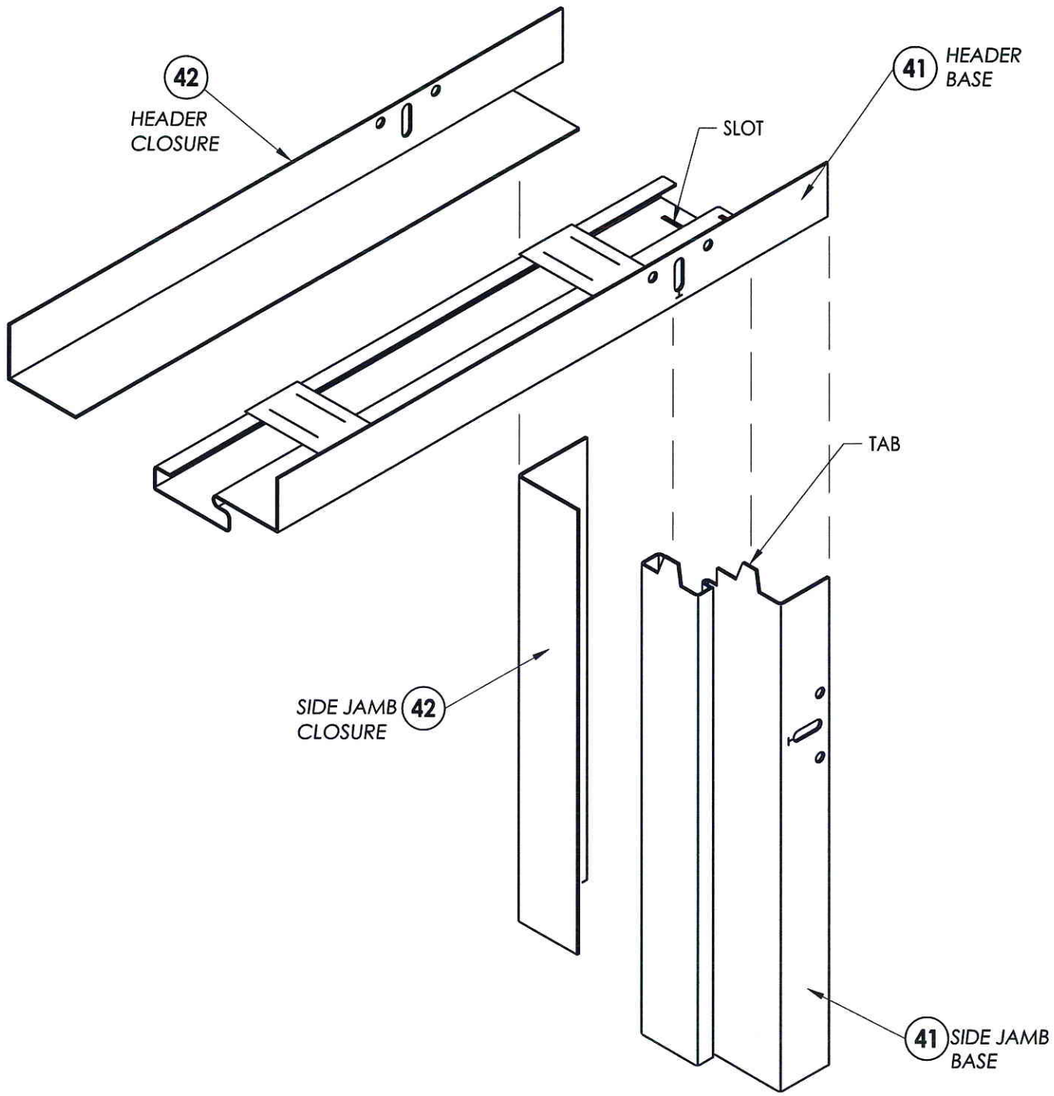

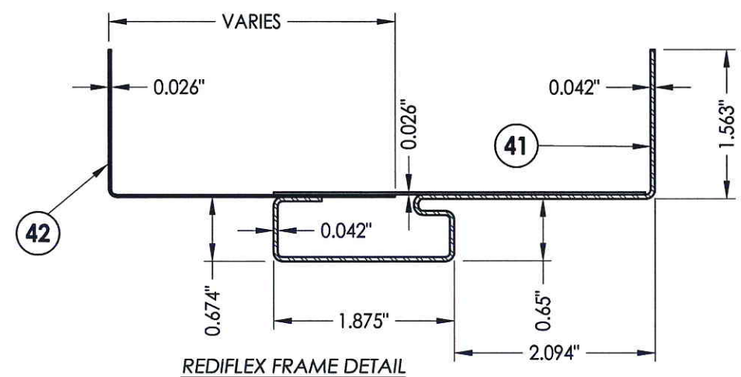

REDIFLEX FRAME DETAIL

NOTES:

1. HEADER AND SIDE BASE JAMB (41) MINIMUM 18 GA. GALV. STEEL.
2. HEADER AND SIDE CLOSURE JAMB (42) MINIMUM 22 GA. GALV. STEEL.
3. FRAME SHOWN WITHOUT OPTIONAL STEEL TRIM CASING.
4. NON-KERF FRAMES DO NOT MEET AIR AND WATER CRITERIA.

STATE OF TEXAS
LYNDON F. SCHMIDT
104123
LICENSED PROFESSIONAL ENGINEER
9.18.13

Documents Prepared By: Lyndon F. Schmidt, P.E.
TEXAS P.E. #104123

RW BUILDING CONSULTANTS, INC.
P.O. Box 230 Valrico FL. 33595
Phone No.: 813.659.9197

TEXAS BOARD OF PROFESSIONAL ENGINEERS
CERTIFICATE OF REGISTRATION # F-11852

PRODUCT: DUNBARTON REDIFLEX TWO-PIECE STEEL FRAME

PART OR ASSEMBLY: STEEL FRAME CROSS SECTION & DETAILS

NO.	DATE	REVISIONS	BY

DATE: 7/9/13
SCALE: N.T.S.
DWG. BY: JK
CHK. BY: LFS
DRAWING NO.: TX-4353
SHEET 2 OF 8

© 2013 R.W. BUILDING CONSULTANTS INC.

R:\A - Projects\Project Folders\Proj 1601 - 1700\PF 1650\D. RWBC Drawings\TX-4338-41.dwg, 2.8

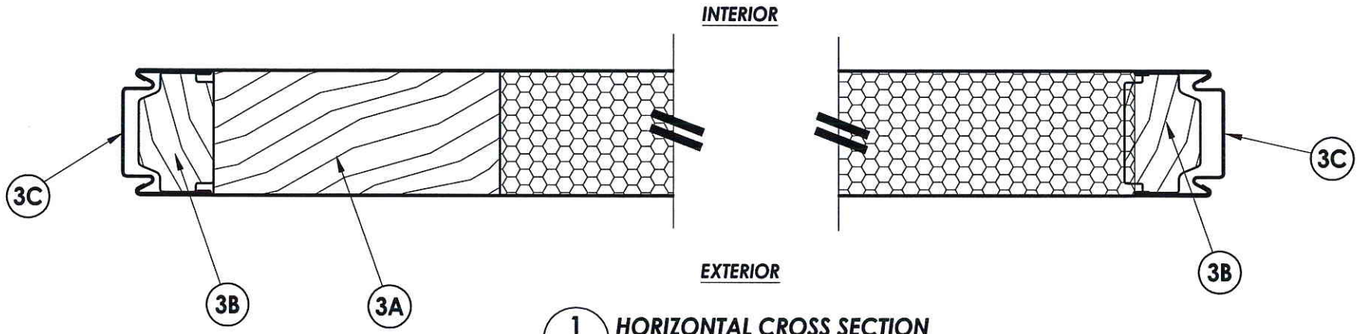

1/3 **HORIZONTAL CROSS SECTION**
Door panel

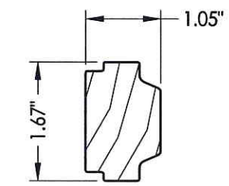

3B **STILE**
Wood Reinforcement

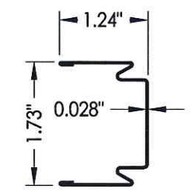

3C **STILE & TOP RAIL**
Steel

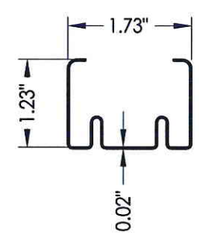

3D **BOTTOM RAIL**
Steel

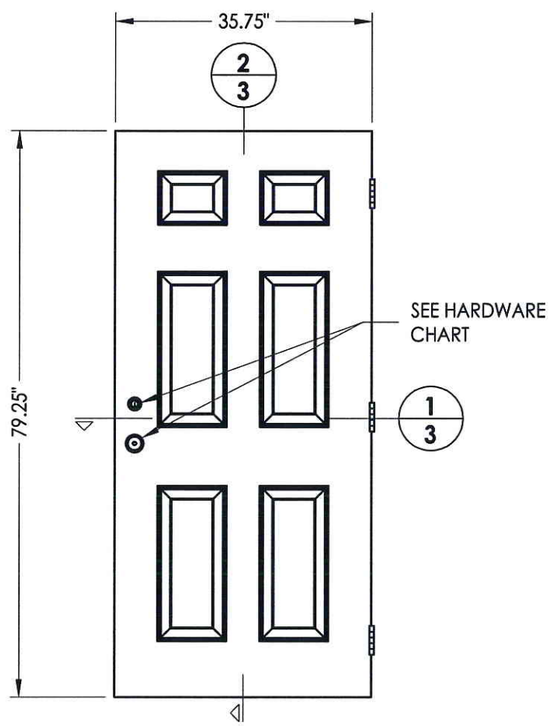

50 **DOOR PANEL**
JELD-WEN

STEEL SKIN: 0.020" MIN. THICK
FOAM CORE: POLYSTYRENE (1.25 PCF DENSITY)

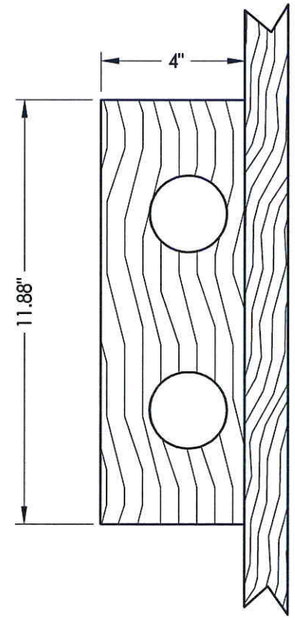

3A **LOCK BLOCK**

HARDWARE CHART		
MANUFACTURER	MODEL	
KWIKSET	LEVER:	200DL
	DEADBOLT:	Signature Series 980
SCHLAGE	LOCK:	F51
	DEADBOLT:	B60N

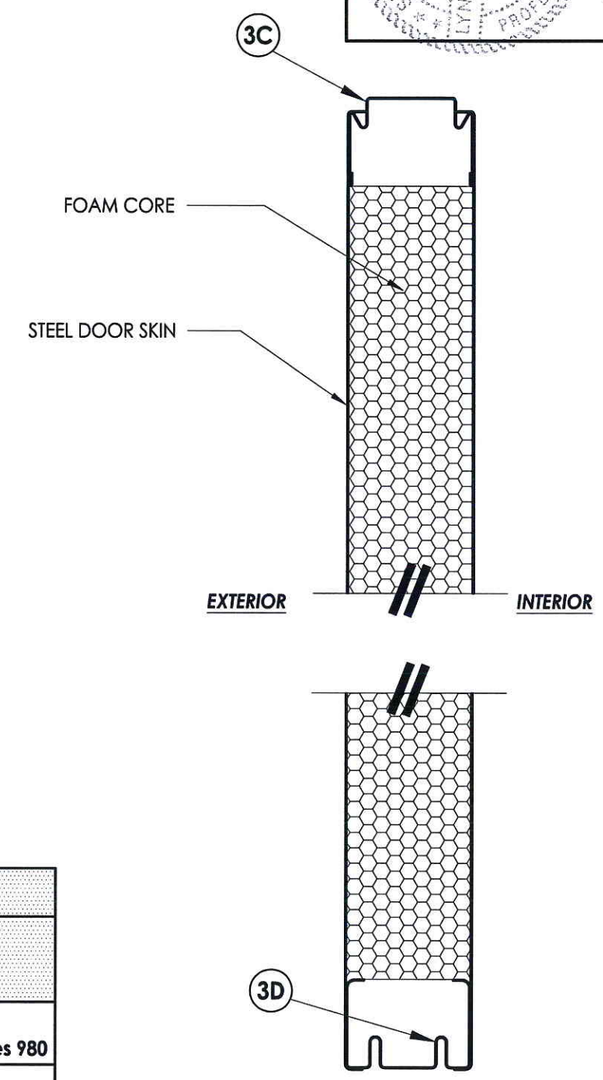

2/3 **VERTICAL CROSS SECTION**
Door panel

STATE OF TEXAS
LYNDON F. SCHMIDT
104123
LICENSED
PROFESSIONAL ENGINEER
9-18-13

Documents Prepared By: Lyndon F. Schmidt, P.E.
TEXAS P.E. #104123

RW BUILDING CONSULTANTS, INC.
P.O. Box 230 Valrico FL. 33595
Phone No.: 813.659.9197

TEXAS BOARD OF PROFESSIONAL ENGINEERS
CERTIFICATE OF REGISTRATION # F-11852

PRODUCT: DUNBARTON REDIFLEX TWO-PIECE STEEL FRAME

PART OR ASSEMBLY: DOOR PANEL DETAILS

NO.	DATE	REVISIONS	BY

DATE: 7/9/13
SCALE: N.T.S.
DWG. BY: JK
CHK. BY: LFS
DRAWING NO.: TX-4353
SHEET 3 OF 8

© 2013 R.W. BUILDING CONSULTANTS INC.

R:\A - Projects\Project Folders\Proj 1601 - 1700\PF 1650\D. RWBC Drawings\TX-4338-41.dwg, 3.8

Note:
1. A minimum of three threads must protrude completely though the supporting steel stud.

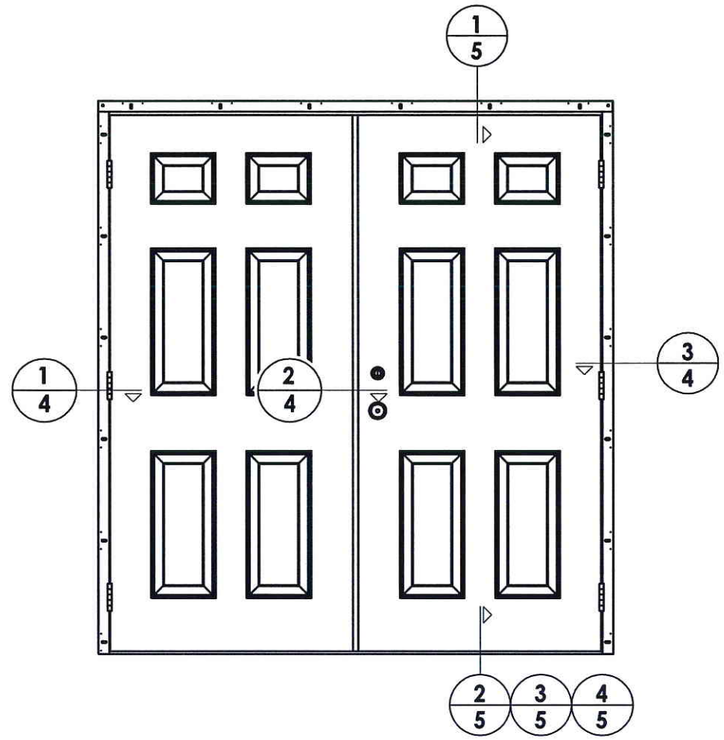

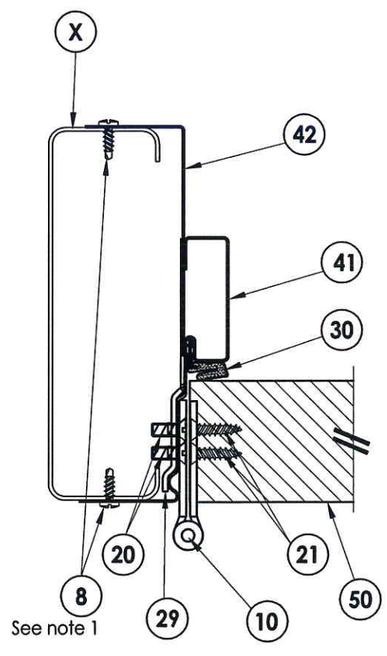

1/4 **HORIZONTAL CROSS SECTION**
Optional steel stud construction

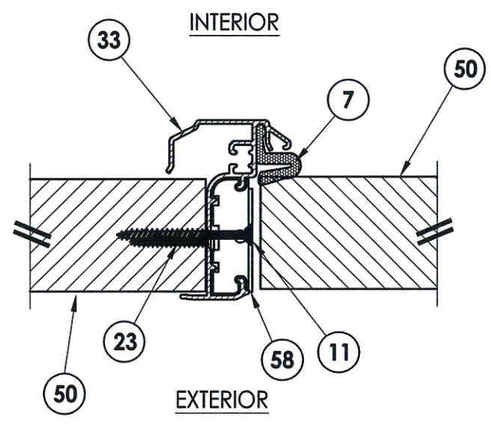

2/4 **HORIZONTAL CROSS SECTION**

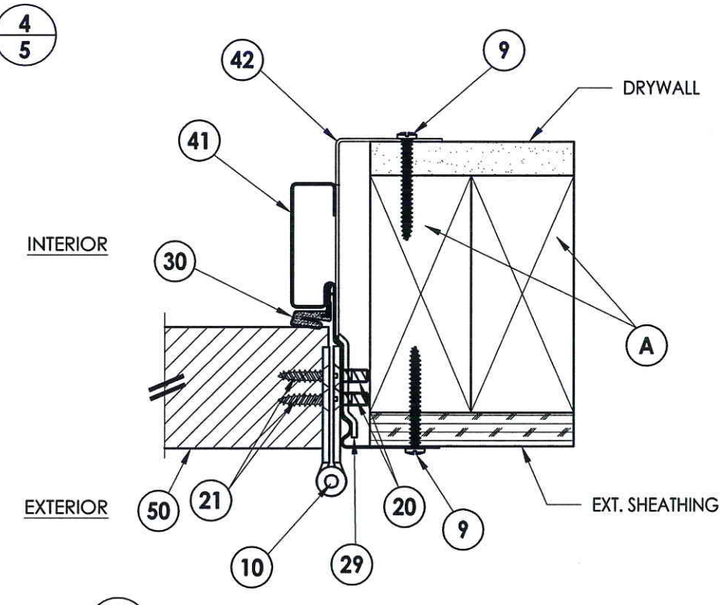

3/4 **HORIZONTAL CROSS SECTION**

STATE OF TEXAS
LYNDON F. SCHMIDT
104123
LICENSED PROFESSIONAL ENGINEER
9/18/13

Documents Prepared By: Lyndon F. Schmidt, P.E.
TEXAS P.E. #104123
RW BUILDING CONSULTANTS, INC.
P.O. Box 230 Valrico FL 33595
Phone No.: 813.659.9197
TEXAS BOARD OF PROFESSIONAL ENGINEERS
CERTIFICATE OF REGISTRATION # F-11852

PRODUCT: *DUNBARTON REDIFLEX TWO-PIECE STEEL FRAME*

PART OR ASSEMBLY: *HORIZONTAL CROSS SECTIONS*

NO.	DATE	REVISIONS	BY

DATE: 7/9/13
SCALE: N.T.S.
DWG. BY: JK
CHK. BY: LFS
DRAWING NO.: TX-4353
SHEET 4 OF 8

© 2013 R.W. BUILDING CONSULTANTS INC.

R:\A - Projects\Project Folders\Proj 1601 - 1700\PF 1650\D. RWBC Drawings\TX-4338-41.dwg, 4.8

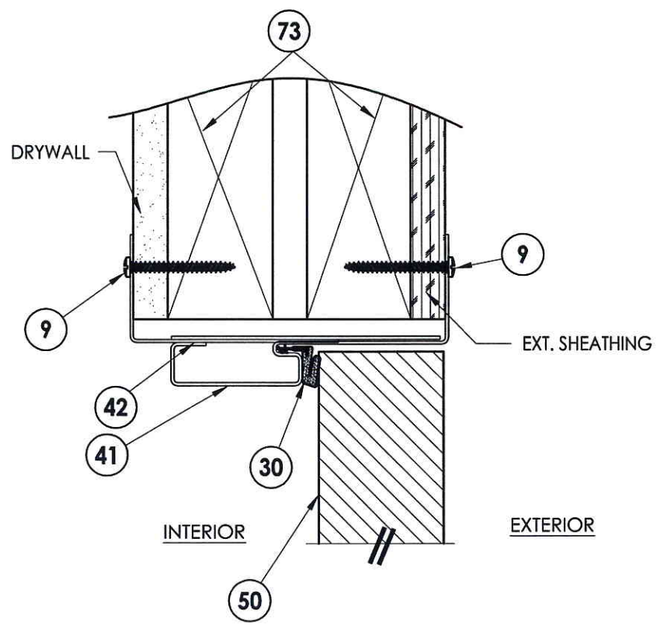

1/5 **VERTICAL CROSS SECTION**

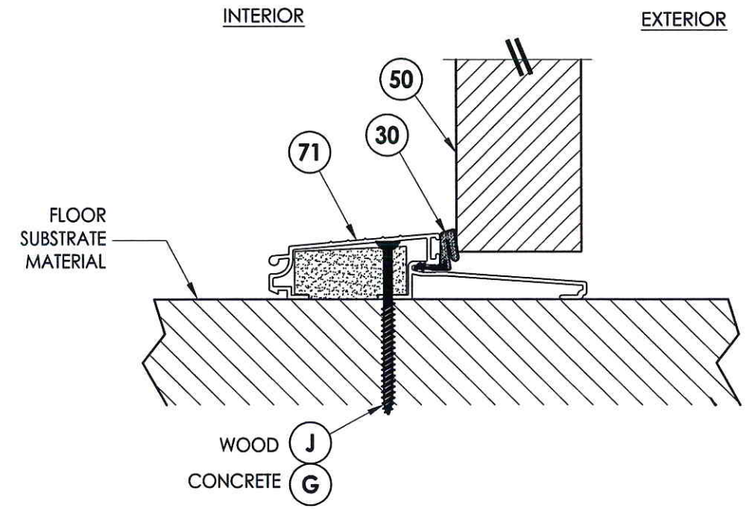

2/5 **VERTICAL CROSS SECTION**
Shown w/ Outswing Threshold

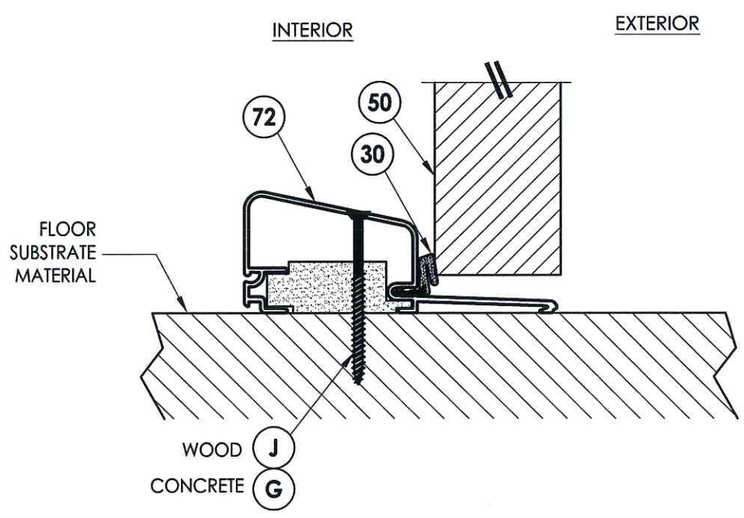

3/5 **VERTICAL CROSS SECTION**
Shown w/ High Dam Threshold

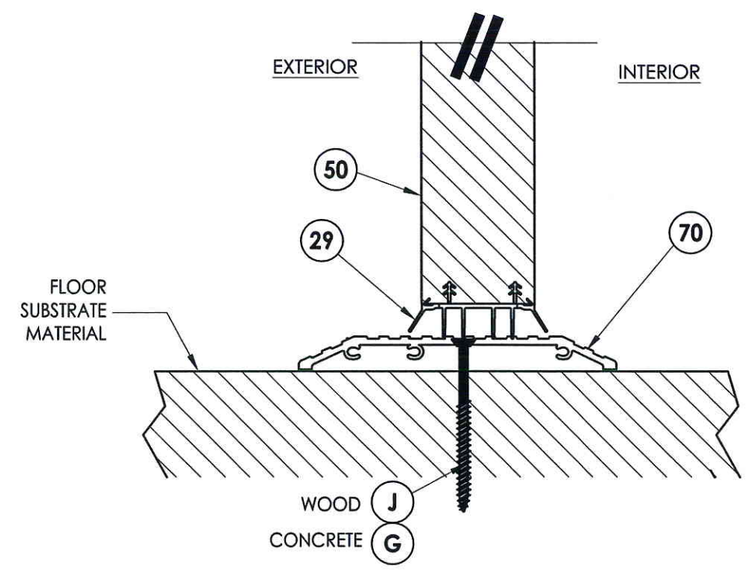

4/5 **VERTICAL CROSS SECTION**
Shown w/ ADA Threshold

STATE OF TEXAS
LYNDON F. SCHMIDT
104123
LICENSED PROFESSIONAL ENGINEER
7-18-13

Documents Prepared By: Lyndon F. Schmidt, P.E.
TEXAS P.E. #104123

RW BUILDING CONSULTANTS, INC.
P.O. Box 230 Valrico FL. 33595
Phone No.: 813.659.9197

TEXAS BOARD OF PROFESSIONAL ENGINEERS
CERTIFICATE OF REGISTRATION # F-11852

PRODUCT: DUNBARTON REDIFLEX TWO-PIECE STEEL FRAME

PART OR ASSEMBLY: VERTICAL CROSS SECTIONS

NO.	DATE	REVISIONS	BY

DATE: 7/9/13
SCALE: N.T.S.
DWG. BY: JK
CHK. BY: LFS
DRAWING NO.: TX-4353
SHEET 5 OF 8

© 2013 R.W. BUILDING CONSULTANTS INC.

R:\A - Projects\Project Folders\Proj 1601 - 1700\PF 1650\D. RWBC Drawings\TX-4338-41.dwg, 5.8

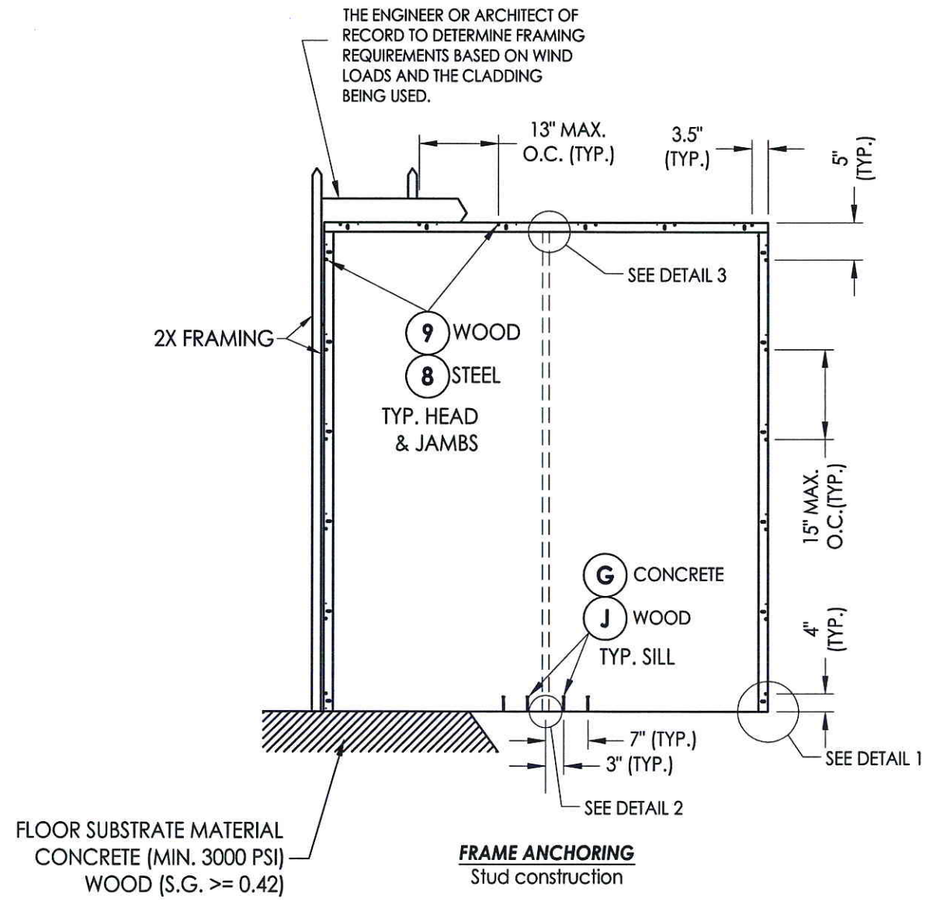

FRAME ANCHORING
Stud construction

ASTRAGAL

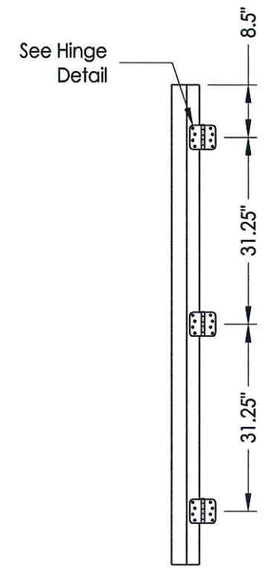

HINGE JAMB

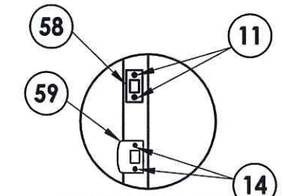

STRIKE PLATE DETAIL

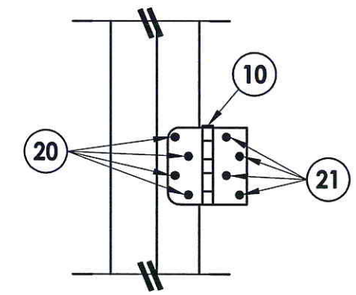

HINGE DETAIL

CONCRETE ANCHOR NOTES:

1. *Concrete anchor locations at the corners may be adjusted to maintain the min. edge distance to mortar joints.*
2. *Concrete anchor locations noted as "MAX. ON CENTER" must be adjusted to maintain the min. edge distance to mortar joints, additional concrete anchors may be required to ensure the "MAX. ON CENTER" dimension are not exceeded.*
3. *Concrete anchor table:*

ANCHOR TYPE	ANCHOR SIZE	MIN. EMBEDMENT	MIN. CLEARANCE TO MASONRY EDGE	MIN. CLEARANCE TO ADJACENT ANCHOR
ITW TAPCON®	1/4"	1-3/4"	1-1/2"	4"
ELCO ULTRACON®	1/4"	1-3/4"	1"	4"

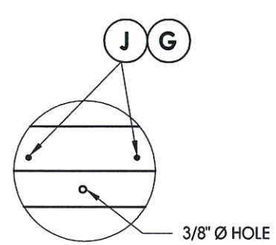

DETAIL 2

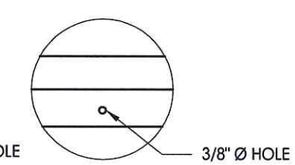

DETAIL 3

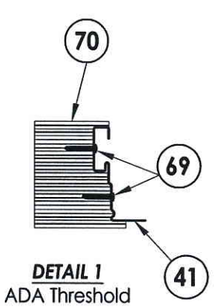

DETAIL 1
ADA Threshold

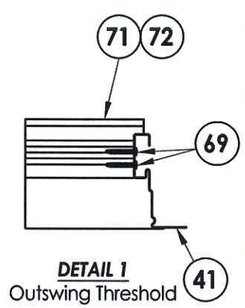

DETAIL 1
Outswing Threshold

STATE OF TEXAS
LYNDON F. SCHMIDT
104123
LICENSED PROFESSIONAL ENGINEER
7-18-13

Documents Prepared By: Lyndon F. Schmidt, P.E.
TEXAS P.E. #104123
RW BUILDING CONSULTANTS, INC.
P.O. Box 230 Valrico FL 33595
Phone No.: 813.659.9197
TEXAS BOARD OF PROFESSIONAL ENGINEERS
CERTIFICATE OF REGISTRATION # F-11852

PRODUCT: *DUNBARTON REDIFLEX TWO-PIECE STEEL FRAME*

PART OR ASSEMBLY: *FRAME ANCHORING*

NO.	DATE	REVISIONS	BY

DATE: 7/9/13
SCALE: N.T.S.
DWG. BY: JK
CHK. BY: LFS
DRAWING NO.: TX-4353
SHEET 6 OF 8

© 2013 R.W. BUILDING CONSULTANTS INC.

R:\A - Projects\Project Folders\Proj 1601 - 1700\PF 1650\D. RWBC Drawings\TX-4338-41.dwg, 6.8

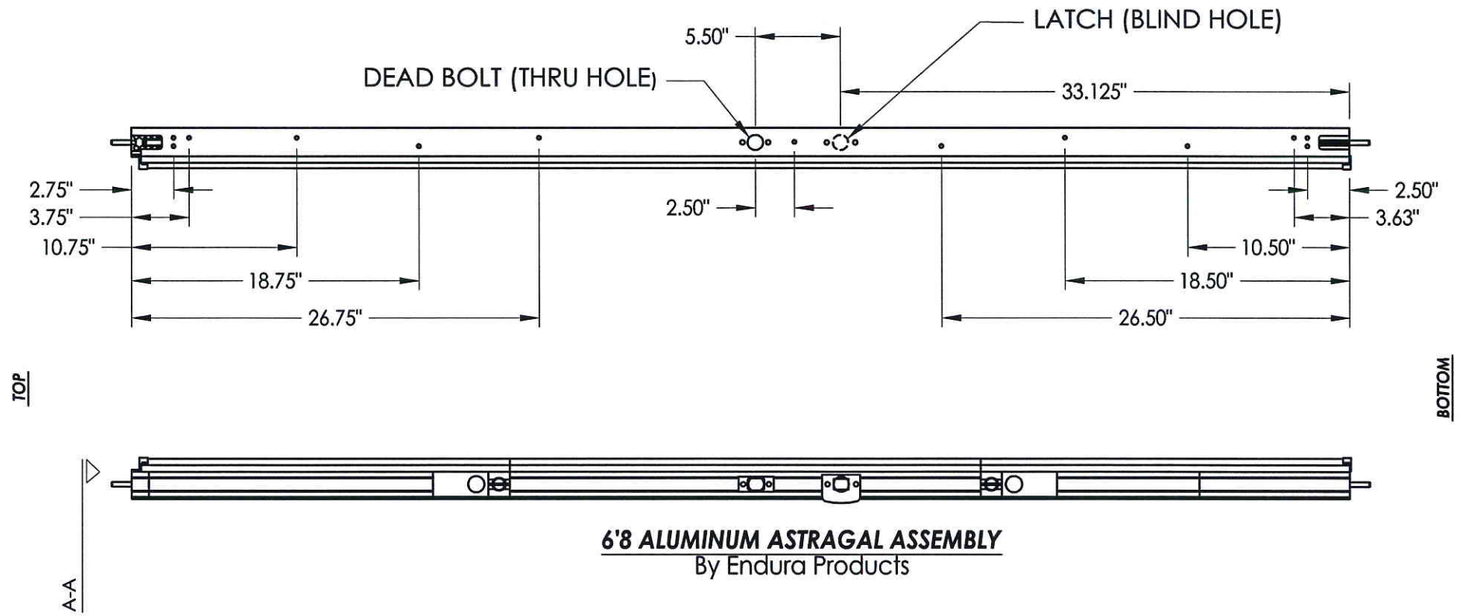

6'8 ALUMINUM ASTRAGAL ASSEMBLY
By Endura Products

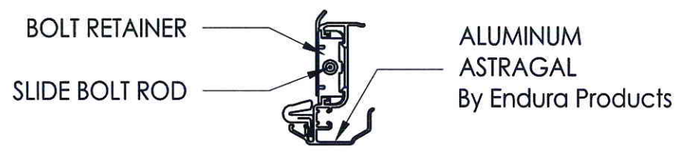

VIEW A-A
Aluminum Astragal Assembly

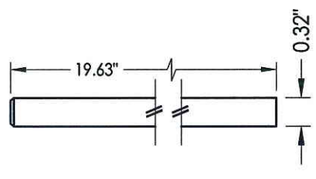

SLIDE BOLT ROD
MATL: STEEL

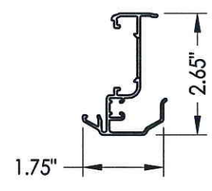

33 **ALUMINUM ASTRAGAL**
By Endura Products

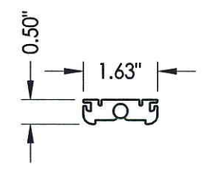

BOLT RETAINER
MATL: 9-3/4" Long Aluminum

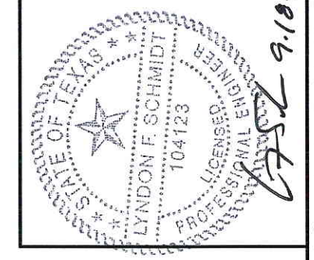

9-18-13

Documents Prepared By: Lyndon F. Schmidt, P.E.
TEXAS P.E. #104123

RW BUILDING CONSULTANTS, INC.
P.O. Box 230 Valrico FL. 33595
Phone No.: 813.659.9197

TEXAS BOARD OF PROFESSIONAL ENGINEERS
CERTIFICATE OF REGISTRATION # F-11852

PRODUCT: DUNBARTON REDIFLEX TWO-PIECE STEEL FRAME

PART OR ASSEMBLY: ASTRAGAL DETAILS

NO.	DATE	REVISIONS	BY

DATE: 7/9/13
SCALE: N.T.S.
DWG. BY: JK
CHK. BY: LFS
DRAWING NO.: TX-4353
SHEET 7 OF 8

© 2013 R.W. BUILDING CONSULTANTS INC.

R:\A - Projects\Project Folders\Proj 1601 - 1700\PF 1650\D. RWBC Drawings\TX-4338-41.dwg, 7.8

BILL OF MATERIALS

ITEM #	DESCRIPTION	MATERIAL
A	2X FRAMING: SG >= 0.42	WOOD
G	1/4" ELCO OR ITW PFH CONCRETE SCREW (1-3/4" MIN. EMBEDMENT)	STEEL
J	#10 PFH WOOD SCREW (1-1/2" MIN. EMBEDMENT)	
X	SSMA STUD 550S162-54 (Fy = 33 ksi, Fu = 45 ksi)	STEEL
8	10-16 TEKS SELF-DRILLING SCREW (ITW BUILDEX)	STEEL
9	#6 X 2" PFH WS	STEEL
10	4" X 4" HINGE	STEEL
11	#8 X 2-1/2" PPH SCREW	STEEL
14	#8 x 3/8" PFH WS	STEEL
20	10-24 X 1/2" PFH MS	STEEL
21	#10 X 3/4" PFH WOOD SCREW	STEEL
23	#6 X 1-1/2" PFH WOOD SCREW	STEEL
29	JAMB HINGE REIN. 14 GA. 4" x 4" x 1.53" (.075" GALV. STEEL) BY DUNBARTON FR00505	STEEL
30	COMPRESSION WEATHERSTRIPPING QLON QDS 650 BY SCHLEGEL	FOAM
33	ASTRAGAL (ENDURA)	ALUM
41	REDIFLEX JAMB BASE 18 GA. (.042" MIN. GALV. STEEL) BY DUNBARTON	STEEL
42	REDIFLEX JAMB CLOSURE 22 GA. (.026" MIN. GALV. STEEL) BY DUNBARTON	STEEL
50	STEEL DOOR PANEL - by JELD-WEN	-
58	STRIKE PLATE - DEADBOLT	STEEL
59	STRIKE PLATE - LATCHBOLT	STEEL
69	#8 X 1-1/4" PWH SMS	STEEL
70	ADA THRESHOLD	ALUM
71	OUTSWING THRESHOLD	ALUM/COMP
72	HIGH DAM OUTSWING THRESHOLD	ALUM/COMP

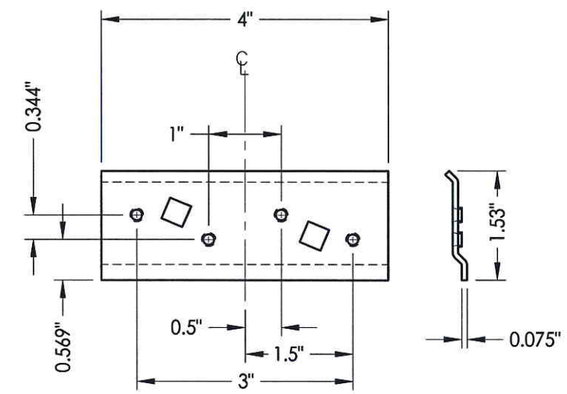

29 HINGE REINFORCEMENT

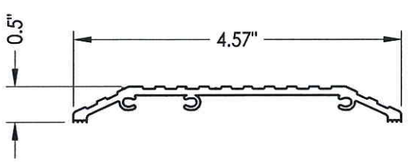

70 ADA THRESHOLD

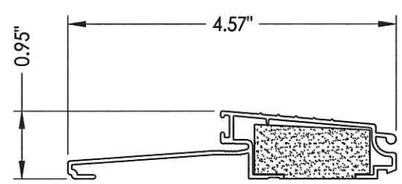

71 OUTSWING THRESHOLD
AFCO

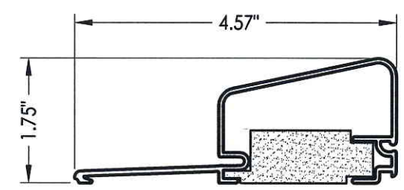

72 HIGH DAM THRESHOLD
AFCO

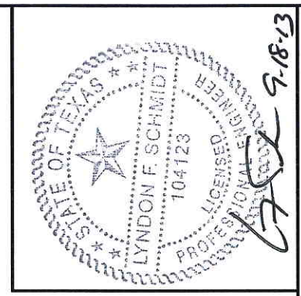

Documents Prepared By: Lyndon F. Schmidt, P.E.
TEXAS P.E. #104123

RW BUILDING CONSULTANTS, INC.
P.O. Box 230 Valrico FL. 33595
Phone No.: 813.659.9197

TEXAS BOARD OF PROFESSIONAL ENGINEERS
CERTIFICATE OF REGISTRATION # F-11852

PRODUCT: DUNBARTON REDIFLEX TWO-PIECE STEEL FRAME

PART OR ASSEMBLY: BILL OF MATERIALS & COMPONENTS

NO.	DATE	BY

REVISIONS

DATE: 7/9/13
SCALE: N.T.S.
DWG. BY: JK
CHK. BY: LFS
DRAWING NO.: TX-4353
SHEET 8 OF 8

© 2013 R.W. BUILDING CONSULTANTS INC.

R:\A - Projects\Project Folders\Proj 1601 - 1700\PF 1650\D. RWBC Drawings\TX-4338-41.dwg, 8.8