JELD-WEN DOOR INSTALLATION DETAILS
SMOOTH PRO/DESIGN PRO FIBERGLASS NON-IMPACT FULL LITE FLUSH GLAZE UP TO 12'-0" X 8'-0" OUTSWING/INSWING

TABLE 1

SIZE		DESIGN PRESSURE RATING: 8-0 TALL FLUSH GLAZE SYSTEMS (WITH BACK-TO BACK MULLIONS)		(WITH INTEGRAL MULLIONS)
MAX. PANEL WIDTH = 35 3/4"		SIDELITE	SINGLE OR DOUBLE DOOR WITH OR W/O SIDELITES	SINGLE OR DOUBLE DOOR WITH SIDELITES
		(O)	(X) (O,O,X) (X,O,O) (O,X,O) (XX) (O,XX) (XX,O) (O,XX,O)	(OOX) (XOO) (OXO) (OXX) (XXO) (OXXO)
OUTSWING	POSITIVE	+ 50**	+ 50 Δ	+ 45 *
	NEGATIVE	- 50**	- 50 Δ	- 45 *
INSWING	POSITIVE	+ 50**	+ 50*	+ 45*
	NEGATIVE	- 50**	- 50*	- 45*

GENERAL NOTES

1. THIS PRODUCT IS DESIGNED TO COMPLY WITH CURRENT INTERNATIONAL BUILDING CODE (I.B.C.) & INTERNATIONAL RESIDENTIAL CODE (I.R.C.) AND 2006 TEXAS REVISONS BASED ON THE SIGNED AND SEALED DATE, AND HAS BEEN EVALUATED IN ACCORDANCE TO ASTM E330-02 AND E283-04.
2. 1X AND 2X WOOD BUCKS MUST BE ANCHORED PROPERLY TO TRANSFER LOADS TO THE STRUCTURE. SEE DETAILS ON SHEET 8 FOR 1X OPTIONAL MASONRY/CONCRETE INSTALL AND SHEET 11 FOR 2X BUCK INSTALL. BUCK MATERIAL MUST HAVE A SPECIFIC GRAVITY OF 0.42 OR GREATER.
3. PRODUCT ANCHOR TYPES AND SPACING ARE SHOWN ON SHEETS 9 &10. DIMENSIONS SHOWN FOR ANCHOR SPACING ARE ALWAYS FROM EDGE OF UNIT FRAME. ANCHOR EMBEDMENT TO BASE MATERIAL SHALL BE BEYOND WALL DRESSING OR STUCCO.
4. CONCRETE OR MASONRY MUST BE ANCHORED PROPERLY TO TRANSFER LOADS TO THE STRUCTURE. CONCRETE MATERIAL SHALL HAVE A MINIMUM Fc OF 3000psi OR MASONRY/CMU SHALL CONFORM TO ASTM C90.
5. TEXAS APPROVED SHUTTERS ARE NEEDED WHEN IMPACT PROTECTION IS REQUIRED
6. THIS DOCUMENT SUPERCEDES OTHER ANCHOR INSTALLATION INSTRUCTIONS FOR NON-IMPACT RATED DOORS. FOR OTHER IMPORTANT INSTALLATION INSTRUCTIONS, REFER TO JELD-WEN DOCUMENT #JII106 (INSTALLATION INSTRUCTIONS FOR PRE-HUNG ENTRY DOORS) FOUND ON THE JELD-WEN WEBSITE: *JELD-WEN.COM/LEARN/RESOURCES/INSTALLATION & FINISHING/*
7. FULL LITE APPROVAL COVERS USE OF FRACTIONAL GLAZING, INCLUDING OVALS, SUNBURST AND ROUND TOPS. ALSO INCLUDED ARE INTERNAL AND EXTERNAL GRID, BLINDS BETWEEN GLASS, EXTERNAL WROUGHT IRON AND DECO.
8. SIDELITES ARE AN OPTION AND CAN BE USED IN SINGLE OR DOUBLE CONFIGURATION.
9. ALL FASTENERS IN WOOD SHALL BE COUNTERSUNK 3/16" DEEP. EXAMPLE: 3/16"

* NOTE: PRODUCT HAS NOT BEEN RATED FOR WATER INFILTRATION. IF AUTHORITY HAVING JURISDICTION REQUIRES THAT PRODUCT MEETS THIS REQUIREMENT, PRODUCT SHALL BE USED WHEN INSTALLED AT LOCATION PROTECTED BY OVERHANG SUCH THAT OVERHANG (OH) RATIO = OH LENGTH ÷ OH HEIGHT IS ≧ 1.0

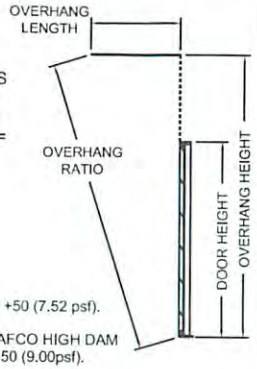

** FIXED SIDELITE MEETS WATER INFILTRATION AT DP +50 (7.52 psf).

Δ OUTSWING SINGLE (X) & DOUBLE DOOR (XX) USING AFCO HIGH DAM SILL NO. H-497 MEETS WATER INFILTRATION AT DP +50 (9.00psf).

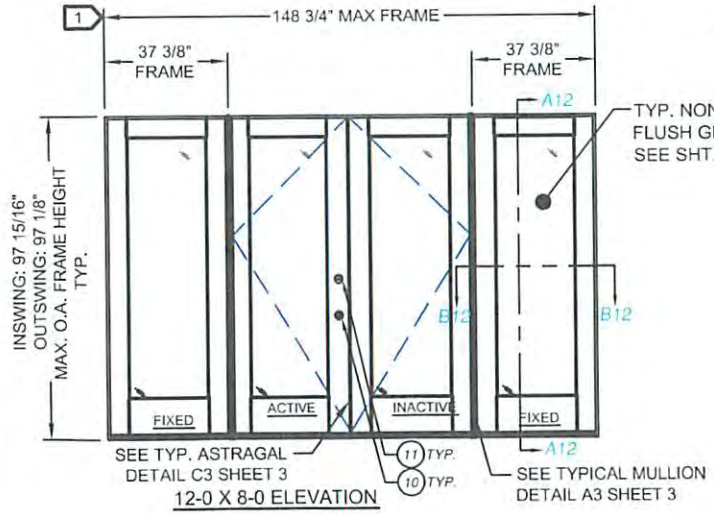

12-0 X 8-0 ELEVATION
QUAD (O,XX,O)
WITH BACK TO BACK MULLION
NO MULLION SPACER

COMPONENT LIST

ITEM	DESCRIPTION	MATERIAL	QTY.
1	NON-COMPRESSION SHIM (0.25" MAX. THK.)	WOOD	AS REQ.
2	2x WOOD SUB BUCK (S.G. MUST BE 0.42 OR GREATER)	WOOD	AS REQ.
3	1x WOOD SUB BUCK (S.G. MUST BE 0.42 OR GREATER)	WOOD	AS REQ.
4	#10 WOOD INSTALLATION SCREW W/ 1 1/2" MIN. EMBEDMENT	STEEL	AS REQ.
5	CONCRETE/CMU ANCHOR (SEE TABLE, SHEETS 5, 7 & 8)	STEEL	AS REQ.
6	#9 X 2 1/2" PHILLIPS FLATHEAD WOOD SCREW	STEEL	4 OR 8
7	MINIMUM #8 X 2" PHILLIPS FLATHEAD WOOD SCREW	STEEL	AS REQ.
8	#9 X 3/4" PHILLIPS FLATHEAD WOOD SCREW (HINGE TO JAMB)	STEEL	12 OR 24
9	1.00" O.A. INSULATED TEMPERED NON-IMPACT GLASS BY CARDINAL	-	1 OR 4
10	KWIKSET LOCK SERIES 400	STEEL	1
11	KWIKSET DEADBOLT SERIES 780	STEEL	1
12	PRESSURE TREATED SILL SPACER USED FOR FIXED PANEL	WOOD	1 OR 2
13	BOTTOM SHOOT BOLT STRIKE PLATE (INSWING ONLY)	STEEL	1
14	ASTRAGAL SHOOT BOLT BACK UP PLATE (OUTSIDE HEAD JAMB)	STEEL	1
15	#9 X 1" PHILLIPS FLATHEAD WOOD SCREW (HINGE TO PANEL)	STEEL	16 OR 32

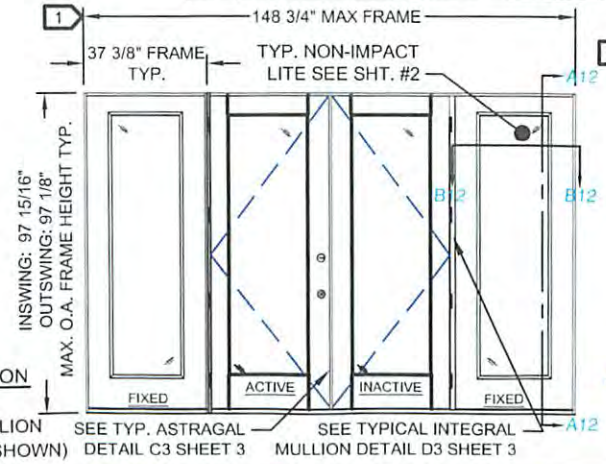

12-0 X 8-0 ELEVATION
QUAD (OXXO)
WITH INTEGRAL MULLION
(NO MULLION SPACER SHOWN)

NOTES:
1. MAXIMUM UNIT WIDTHS MAY INCREASE WITH THE ADDITION OF 1X OR 2X MULLIONS.

SHEET INDEX

SHEET #	DESCRIPTION
1	GENERAL NOTES, B.O.M. & ELEVATIONS
2	ELEVATIONS AND GLAZING DETAIL
3	MULLING DETAILS
4	OUTSWING VERT. AND HORIZ. SECTIONS IN WOOD
5	OUTSWING VERT. AND HORIZ. SECTIONS MASONRY/CONCRETE
6	INSWING VERTICAL AND HORIZONTAL SECTIONS IN WOOD
7	INSWING VERT. AND HORIZ. SECTIONS IN MASONRY/CONCRETE
8	OPTIONAL MASONRY/CONCRETE ANCHORING DETAILS
9	OUTSWING AND INSWING ANCHORING DETAILS
10	OUTSWING AND INSWING ANCHORING DETAILS
11	OPTIONAL 2X BUCK DETAILS IN MASONRY/CONCRETE
12	FIXED PANEL TO FRAME ATTACHMENT DETAILS

STATE OF TEXAS
ALEXIS SPYROU
102957
LICENSED
PROFESSIONAL ENGINEER

2-4-14

ALEXIS SPYROU
TEXAS P.E. NO. 102957
398 DANIA BEACH BLVD. STE. 338
DANIA BEACH, FL 33004
TBPE FIRM NO. 13734

JELD-WEN WINDOWS & DOORS
3737 Lakeport Blvd.
Klamath Falls, OR 97601
Phone: (541) 882-3451
Fax: (541) 850-2609

PRODUCT: SMOOTH PRO/DESIGN PRO NON-IMPACT 12-0 X 8-0 FLUSH GLAZE W/ 3-0 SIDELITES

PART OR ASSEMBLY: GENERAL NOTES, ELEVATIONS, DP RATINGS AND B.O.M.

DATE: 1/20/2014
SCALE: NONE
DWG. BY: G.LUBBECKE
CHK. BY: S.SAFFELL
DRAWING No.: A010732
SHEET 1 OF 12

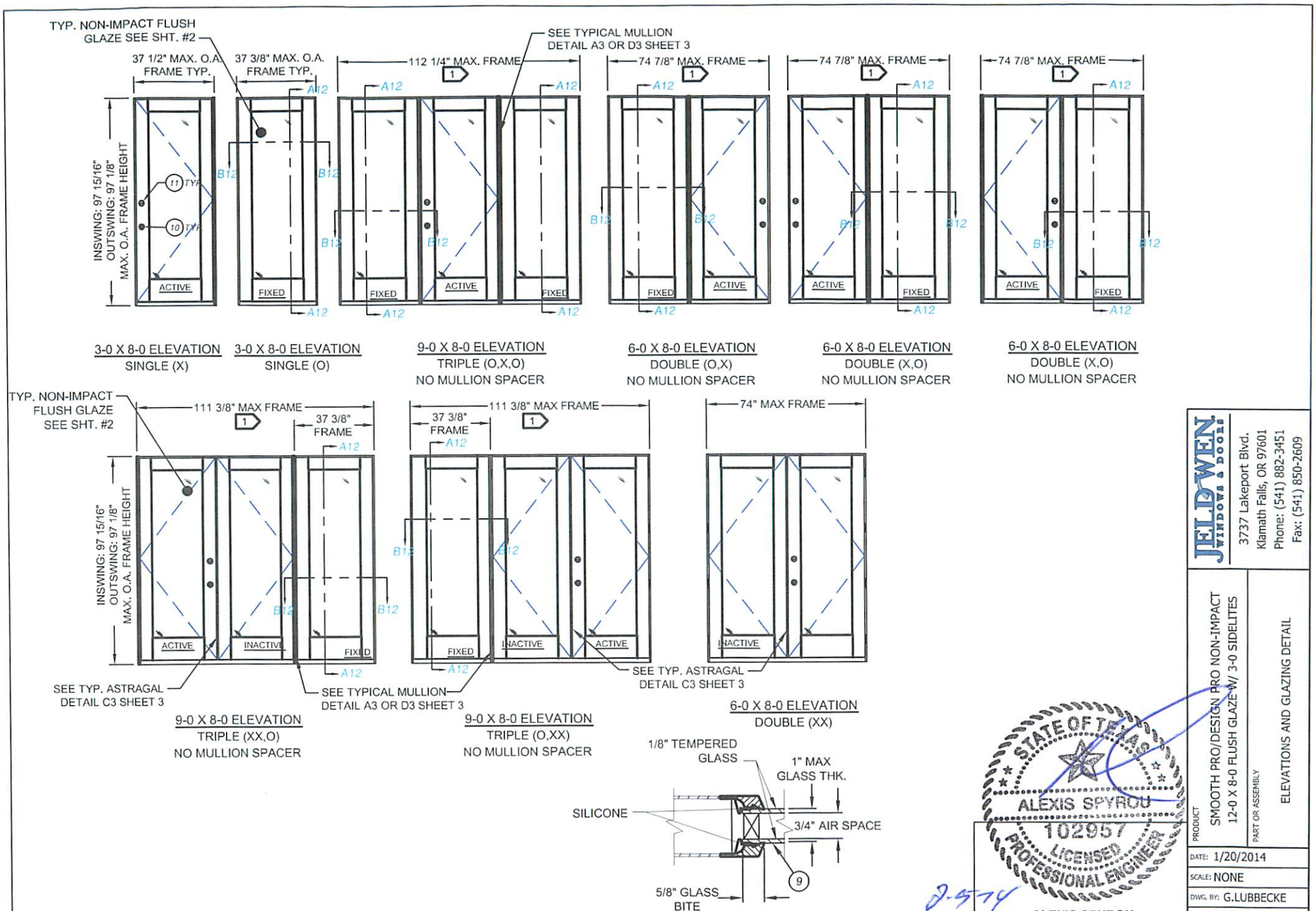
TYP. NON-IMPACT FLUSH GLAZE SEE SHT. #2
SEE TYPICAL MULLION DETAIL A3 OR D3 SHEET 3
37 1/2" MAX. O.A. FRAME TYP.
37 3/8" MAX. O.A. FRAME TYP.
112 1/4" MAX. FRAME
74 7/8" MAX. FRAME
INSWING: 97 15/16"
OUTSWING: 97 1/8"
MAX. O.A. FRAME HEIGHT
ACTIVE
FIXED
A12
B12
11 TYP.
10 TYP.
3-0 X 8-0 ELEVATION
SINGLE (X)
3-0 X 8-0 ELEVATION
SINGLE (O)
9-0 X 8-0 ELEVATION
TRIPLE (O,X,O)
NO MULLION SPACER
6-0 X 8-0 ELEVATION
DOUBLE (O,X)
NO MULLION SPACER
6-0 X 8-0 ELEVATION
DOUBLE (X,O)
NO MULLION SPACER
6-0 X 8-0 ELEVATION
DOUBLE (X,O)
NO MULLION SPACER
TYP. NON-IMPACT FLUSH GLAZE SEE SHT. #2
111 3/8" MAX FRAME
37 3/8" FRAME
74" MAX FRAME
INACTIVE
SEE TYP. ASTRAGAL DETAIL C3 SHEET 3
SEE TYPICAL MULLION DETAIL A3 OR D3 SHEET 3
9-0 X 8-0 ELEVATION
TRIPLE (XX,O)
NO MULLION SPACER
9-0 X 8-0 ELEVATION
TRIPLE (O,XX)
NO MULLION SPACER
6-0 X 8-0 ELEVATION
DOUBLE (XX)
1/8" TEMPERED GLASS
1" MAX GLASS THK.
SILICONE
3/4" AIR SPACE
5/8" GLASS BITE
9
FLUSH GLAZING DETAIL
NON-IMPACT GLAZING DETAIL
MAX. D.L.O: 23 7/8" X 78 7/8"
NOTES:
1 MAXIMUM UNIT WIDTHS MAY INCREASE WITH THE ADDITION OF 1X OR 2X MULLIONS.
STATE OF TEXAS
ALEXIS SPYROU
102957
LICENSED
PROFESSIONAL ENGINEER
2-5-14
ALEXIS SPYROU
TEXAS P.E. NO. 102957
398 DANIA BEACH BLVD. STE. 338
DANIA BEACH, FL 33004
TBPE FIRM NO. 13734
JELD-WEN WINDOWS & DOORS
3737 Lakeport Blvd.
Klamath Falls, OR 97601
Phone: (541) 882-3451
Fax: (541) 850-2609
PRODUCT
SMOOTH PRO/DESIGN PRO NON-IMPACT
12-0 X 8-0 FLUSH GLAZE W/ 3-0 SIDELITES
PART OR ASSEMBLY
ELEVATIONS AND GLAZING DETAIL
DATE: 1/20/2014
SCALE: NONE
DWG. BY: G.LUBBECKE
CHK. BY: S.SAFFELL
DRAWING No.: A010732
SHEET 2 OF 12

NOTES:
1. MAXIMUM UNIT WIDTHS MAY INCREASE WITH THE ADDITION OF 1X OR 2X MULLIONS.

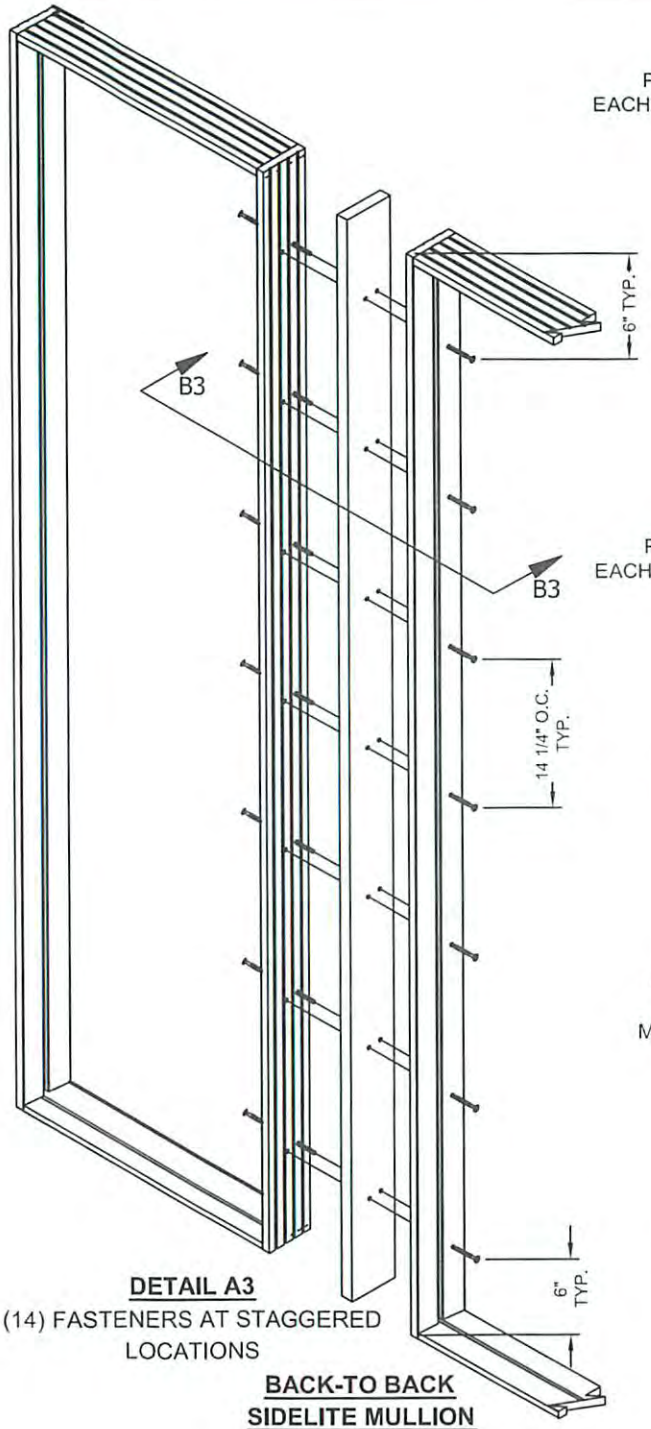

DETAIL A3
(14) FASTENERS AT STAGGERED LOCATIONS

BACK-TO BACK SIDELITE MULLION
MAX. 4 UNITS
EXAMPLE: (O,XX,O), (O,X,O), (O,X)

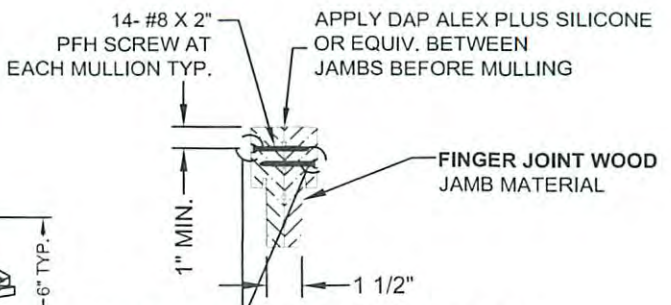

SECTION DETAIL B3
BACK-TO-BACK JAMB
(NO MULLION REINFORCEMENT)

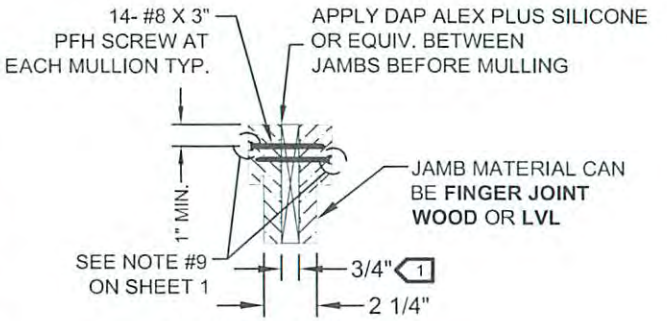

SECTION DETAIL B3
1X MULLION REINFOREMENT

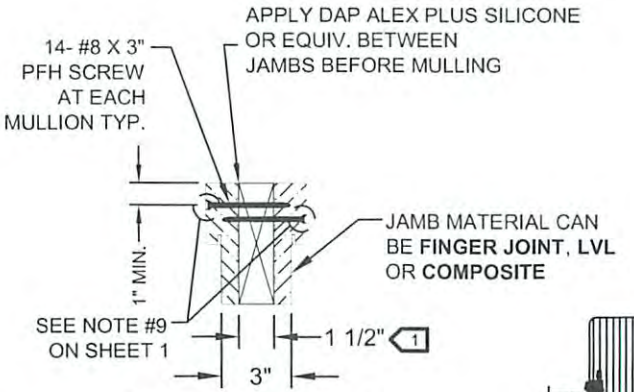

SECTION DETAIL B3
2X MULLION REINFORCEMENT

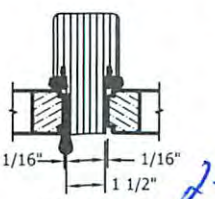

DETAIL D3
INTEGRAL MULLION

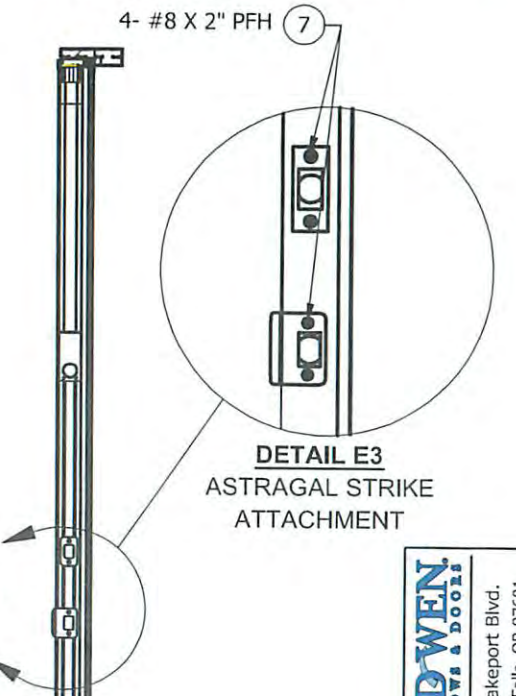

DETAIL E3
ASTRAGAL STRIKE ATTACHMENT

DETAIL C3
ASTRAGAL

STATE OF TEXAS
ALEXIS SPYROU
102957
LICENSED
PROFESSIONAL ENGINEER

2-4-14

ALEXIS SPYROU
TEXAS P.E. NO. 102957
398 DANIA BEACH BLVD. STE. 338
DANIA BEACH, FL 33004
TBPE FIRM NO. 13734

JELD-WEN WINDOWS & DOORS
3737 Lakeport Blvd.
Klamath Falls, OR 97601
Phone: (541) 882-3451
Fax: (541) 850-2609

PRODUCT: SMOOTH PRO/DESIGN PRO NON-IMPACT 12-0 X 8-0 FLUSH GLAZE W/ 3-0 SIDELITES
PART OR ASSEMBLY: MULLING DETAILS

DATE: 1/20/2014
SCALE: NONE
DWG. BY: G.LUBBECKE
CHK. BY: S.SAFFELL
DRAWING No.: A010732
SHEET 3 OF 12

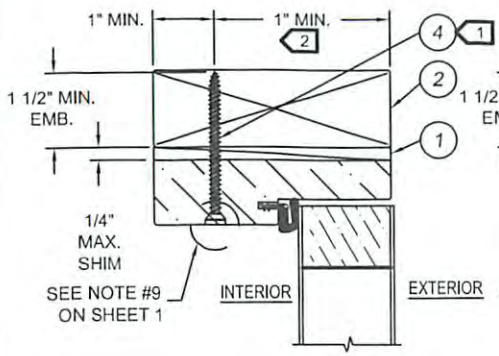

OUTSWING OPERATING UNIT
VERTICAL CROSS SECTION
HEAD JAMB

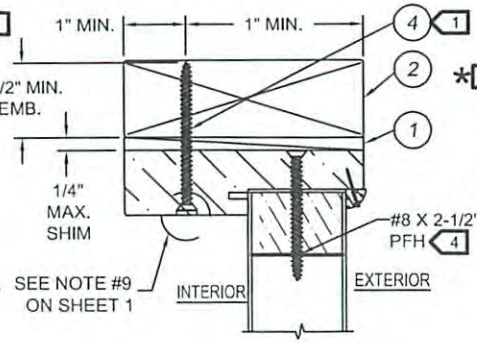

OUTSWING FIXED UNIT
VERTICAL CROSS SECTION
AT HEAD JAMB

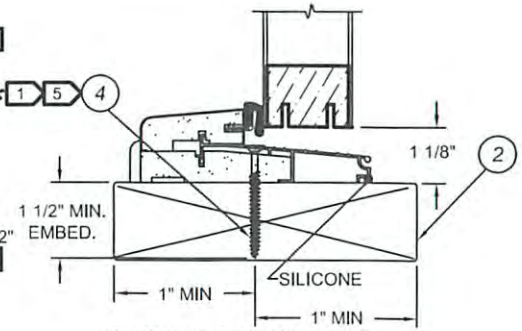

OUTSWING OPERATING UNIT
VERTICAL CROSS SECTION
AFCO J-2297 SILL

***NOTE: ON SINGLE (X or O) UNITS NO ANCHOR REQUIRED AT THE SILL**

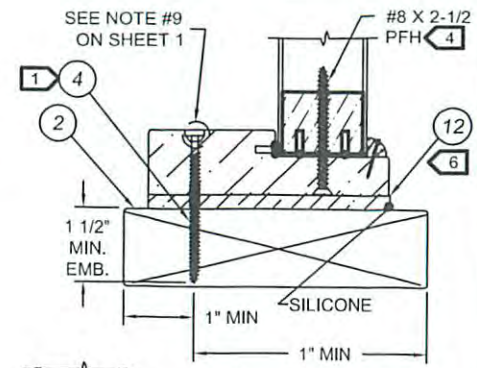

OUTSWING FIXED UNIT
VERTICAL CROSS SECTION
AT BOXED SILL

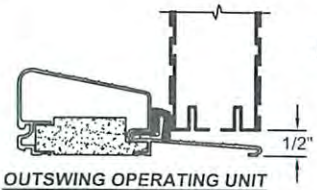

OUTSWING OPERATING UNIT
VERTICAL CROSS SECTION
OPTIONAL AFCO H-497 SILL

***NOTE: ON SINGLE (X or O) UNITS NO ANCHOR REQUIRED AT THE SILL**

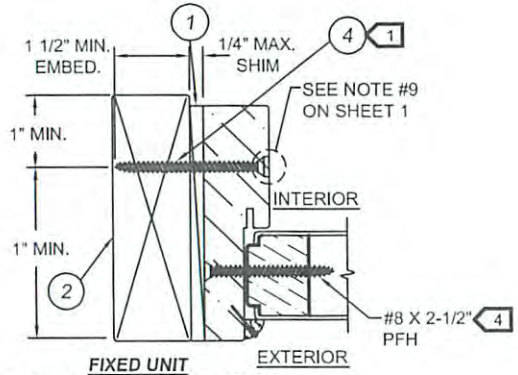

FIXED UNIT
HORIZONTAL CROSS SECTION
OUTSWING SHOWN

HINGE DETAIL AT JAMB:
3 SCREWS (ITEM #8), 1 SCREW (ITEM #6)
PLACE 4- ITEM #15 INTO PANEL

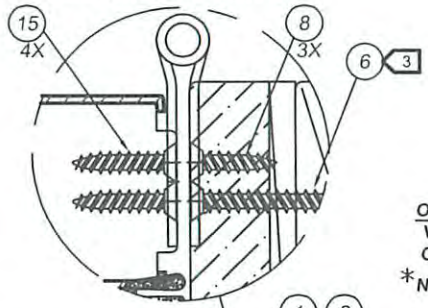

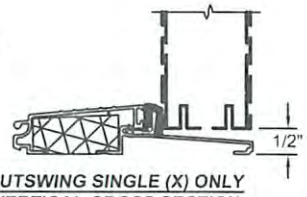

OUTSWING SINGLE (X) ONLY
VERTICAL CROSS SECTION
OPTIONAL AFCO A-117 SILL

***NOTE: NO ANCHOR REQUIRED AT THE SILL**

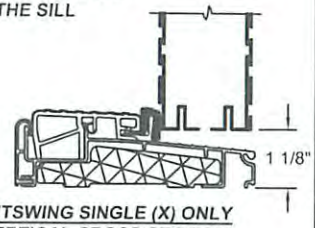

OUTSWING SINGLE (X) ONLY
VERTICAL CROSS SECTION
OPTIONAL ENDURA ZOBL45F SILL

***NOTE: NO ANCHOR REQUIRED AT THE SILL**

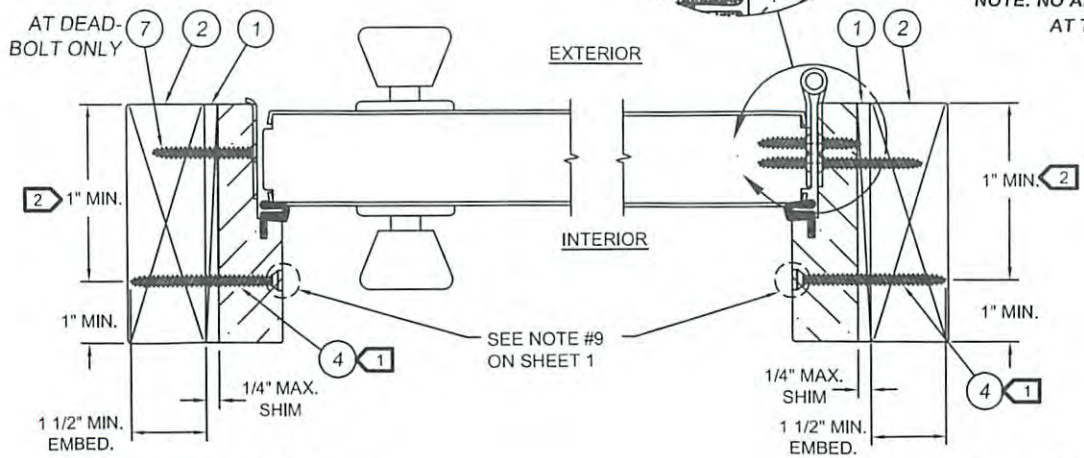

OUTSWING LATCH JAMB AT FRAME
HORIZONTAL CROSS SECTION

OUTSWING HINGE JAMB AT FRAME
HORIZONTAL CROSS SECTION

NOTES:

1. FOR PLACEMENT OF ANCHORS IN 2X BUCK OR 1X BUCK IN CONCRETE/MASONRY OPENINGS, SEE SHEET 8.
2. OPTIONALLY, ANCHOR CAN BE PLACED IN NARROW SECTION OF HEAD OR JAMB AS LONG AS MINIMUM EMBEDMENT AND EDGE DISTANCE ARE ACHIEVED.
3. ITEM #6, (#9 X 2 1/2") TO BE INSTALLED IN EACH HINGE AT JOB SITE, CLOSEST TO WEATHERSTRIP.
4. SEE SHEET 12 FOR FASTENER AMOUNTS AND LOCATIONS.
5. AT SILL, PLACE ANCHOR IN SILL BASE MATERIAL FOR MAXIMUM SUPPORT. SINGLE (X) DO NOT REQUIRE ANCHORS IN SILL.
6. ITEM #12, PRESSURE TREATED SPACER TO MATCH ACTIVE INSWING OR OUTSWING SILL HEIGHT WHEN MULLED.

STATE OF TEXAS
ALEXIS SPYROU
102957
LICENSED
PROFESSIONAL ENGINEER

7-4-14

ALEXIS SPYROU
TEXAS P.E. NO. 102957
398 DANIA BEACH BLVD. STE. 338
DANIA BEACH, FL 33004
TBPE FIRM NO. 13734

JELD-WEN WINDOWS & DOORS
3737 Lakeport Blvd.
Klamath Falls, OR 97601
Phone: (541) 882-3451
Fax: (541) 850-2609

PRODUCT: SMOOTH PRO/DESIGN PRO NON-IMPACT 12-0 X 8-0 FLUSH GLAZE W/ 3-0 SIDELITES

PART OR ASSEMBLY: OUTSWING VERTICAL AND HORIZONTAL SECTIONS IN WOOD

DATE: 1/20/2014
SCALE: NONE
DWG. BY: G.LUBBECKE
CHK. BY: S.SAFFELL
DRAWING No.: A010732
SHEET 4 OF 12

ANCHOR TABLE

ANCHOR TYPE	ANCHOR	SUBSTRATE	MIN. EMBED.	MIN. EDGE DISTANCE
A	3/16" ITW TAPCON	CONCRETE/ CMU	1-1/4"	2-1/2"
B	1/4" ELCO ULTRACON	CONCRETE/ CMU	1-3/8"-CONC. 1-1/4"-CMU	1"
C	#10 WOOD SCREW	2X WOOD BUCK OR FRAMING	1-1/2"	1"
D	3/16" ITW TAPCON	CONCRETE/ CMU	1-1/4"	1"

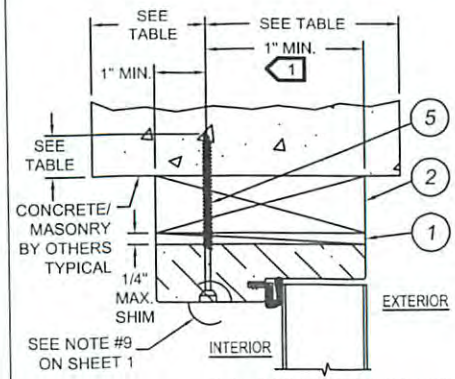

OUTSWING OPERATING UNIT
VERTICAL CROSS SECTION
HEAD JAMB

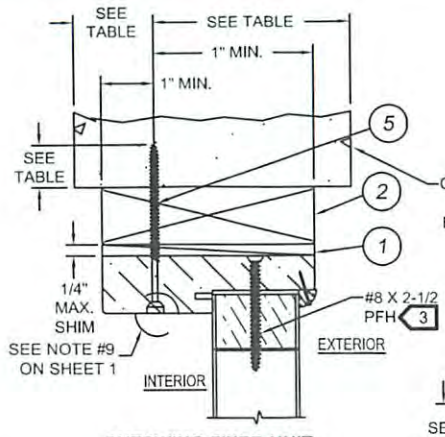

OUTSWING FIXED UNIT
VERTICAL CROSS SECTION
HEAD JAMB

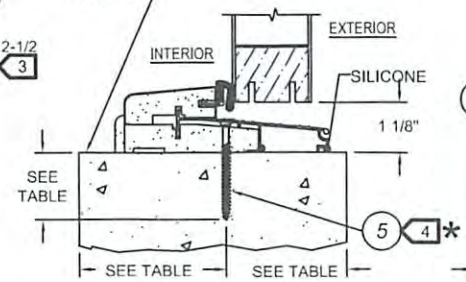

OUTSWING OPERATING UNIT
VERTICAL CROSS SECTION
AFCO J-2297 SILL

*NOTE: ON SINGLE (X or O) UNITS NO ANCHOR REQUIRED AT THE SILL

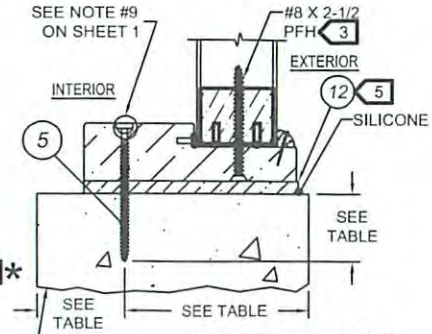

OUTSWING FIXED UNIT
VERTICAL CROSS SECTION
AT BOXED SILL

*NOTE: ON SINGLE (X or O) UNITS NO ANCHOR REQUIRED AT THE SILL

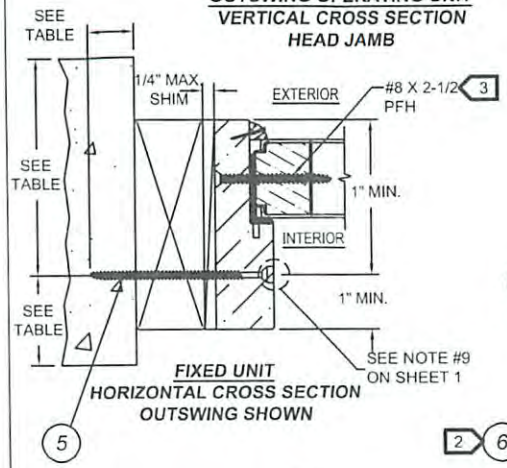

FIXED UNIT
HORIZONTAL CROSS SECTION
OUTSWING SHOWN

HINGE DETAIL AT JAMB:
3 SCREWS (ITEM #8), 1 SCREW (ITEM #6)
PLACE 4- ITEM #15 INTO PANEL

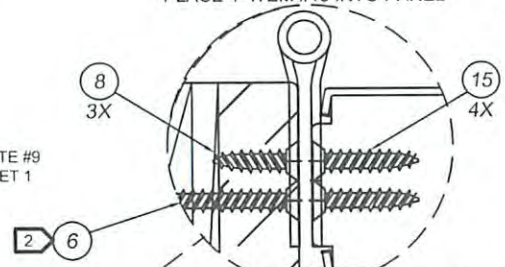

OUTSWING OPERATING UNIT
VERTICAL CROSS SECTION
OPTIONAL AFCO H-497 SILL

*NOTE: ON SINGLE (X or O) UNITS NO ANCHOR REQUIRED AT THE SILL

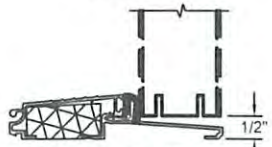

OUTSWING SINGLE (X) ONLY
VERTICAL CROSS SECTION
OPTIONAL AFCO A-117 SILL

*NOTE: NO ANCHOR REQUIRED AT THE SILL

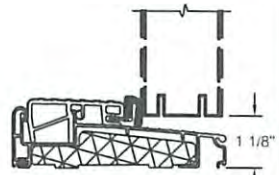

OUTSWING SINGLE (X) ONLY
VERTICAL CROSS SECTION
OPTIONAL ENDURA ZOBL45F SILL

*NOTE: NO ANCHOR REQUIRED AT THE SILL

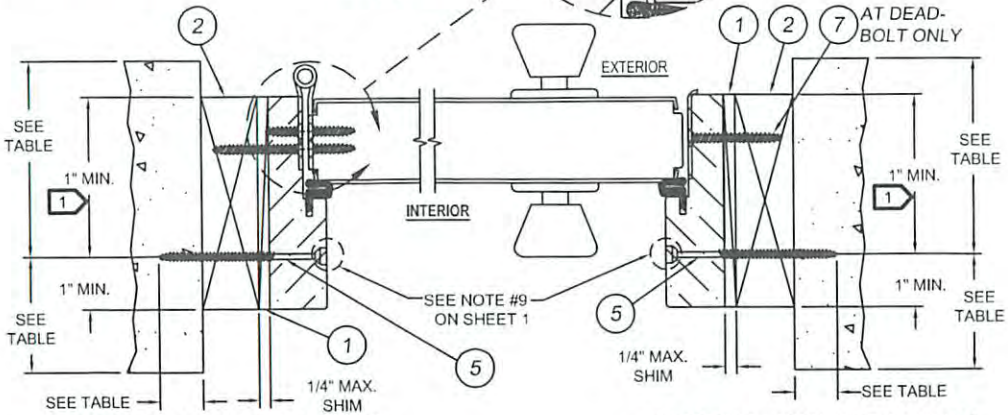

OUTSWING HINGE JAMB AT FRAME
HORIZONTAL CROSS SECTION

OUTSWING LATCH JAMB AT FRAME
HORIZONTAL CROSS SECTION

NOTES:

1. OPTIONALLY, ANCHOR CAN BE PLACED IN NARROW SECTION OF HEAD OR JAMB AS LONG AS MINIMUM EMBEDMENT AND EDGE DISTANCE ARE ACHIEVED.
2. ITEM #6, (#9 X 2 1/2") TO BE INSTALLED IN EACH HINGE AT JOB SITE, CLOSEST TO WEATHERSTRIP.
3. SEE SHEET 12 FOR FASTENER AMOUNTS AND LOCATIONS.
4. AT SILL, PLACE ANCHOR IN SILL BASE MATERIAL FOR MAXIMUM SUPPORT. SINGLE (X) DO NOT REQUIRE ANCHORS IN SILL.
5. ITEM #12, PRESSURE TREATED SPACER TO MATCH ACTIVE INSWING OR OUTSWING SILL HEIGHT WHEN MULLED.

STATE OF TEXAS
ALEXIS SPYROU
102957
LICENSED
PROFESSIONAL ENGINEER

2-4-14

ALEXIS SPYROU
TEXAS P.E. NO. 102957
398 DANIA BEACH BLVD. STE. 338
DANIA BEACH, FL 33004
TBPE FIRM NO. 13734

JELD-WEN WINDOWS & DOORS
3737 Lakeport Blvd.
Klamath Falls, OR 97601
Phone: (541) 882-3451
Fax: (541) 850-2609

PRODUCT: SMOOTH PRO/DESIGN PRO NON-IMPACT 12-0 X 8-0 FLUSH GLAZE W/ 3-0 SIDELITES

PART OR ASSEMBLY: OUTSWING VERTICAL AND HORIZONTAL SECTIONS IN MASONRY/CONCRETE

DATE: 1/20/2014
SCALE: NONE
DWG. BY: G.LUBBECKE
CHK. BY: S.SAFFELL
DRAWING No.: A010732
SHEET 5 OF 12

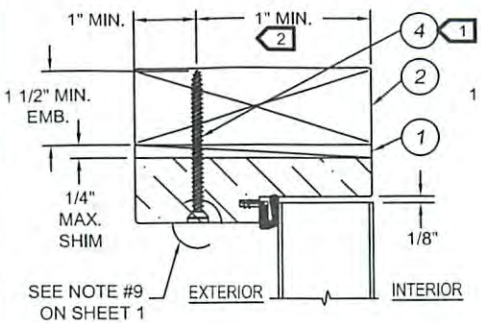

INSWING OPERATING UNIT
VERTICAL CROSS SECTION
HEAD JAMB

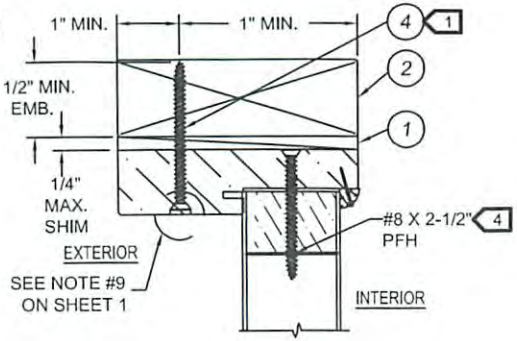

INSWING FIXED UNIT
VERTICAL CROSS SECTION
HEAD JAMB

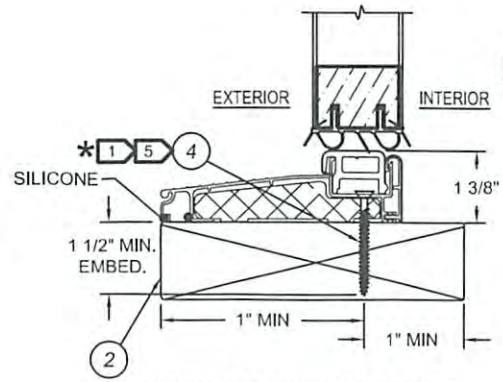

INSWING OPERATING OR FIXED UNIT
VERTICAL CROSS SECTION
ENDURA ZAIL4565F

***NOTE: ON SINGLE (X or O) UNITS**
NO ANCHOR REQUIRED
AT THE SILL

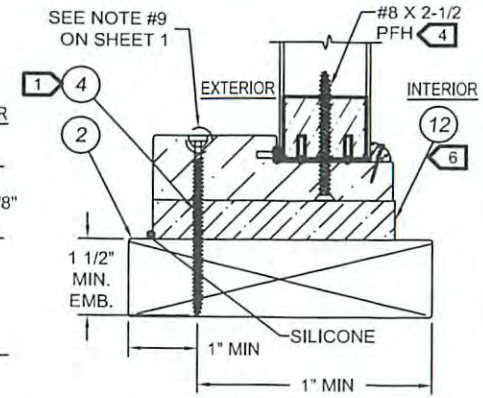

INSWING FIXED UNIT
VERTICAL CROSS SECTION
AT BOXED SILL

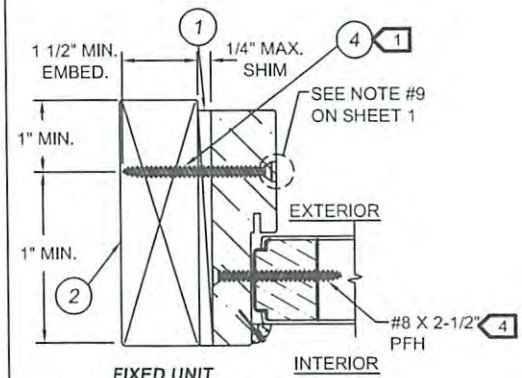

FIXED UNIT
HORIZONTAL CROSS SECTION
INSWING SHOWN

HINGE DETAIL AT JAMB:
3 SCREWS (ITEM #8), 1 SCREW (ITEM #6)
PLACE 4- ITEM #15 INTO PANEL

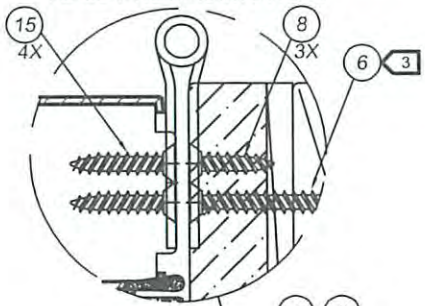

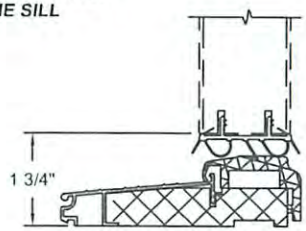

OUTSWING SINGLE (X) ONLY
(NOT RATED FOR ASTRAGAL USE)
VERTICAL CROSS SECTION
AFCO A-276/P-2000 SILL

***NOTE: ON SINGLE (X) UNITS**
NO ANCHOR REQUIRED
AT THE SILL

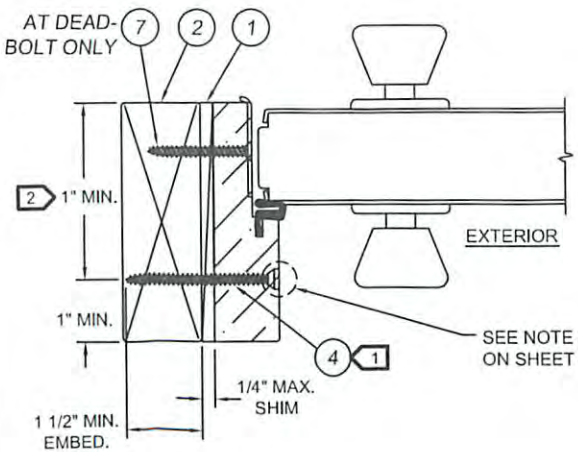

INSWING LATCH JAMB AT FRAME
HORIZONTAL CROSS SECTION

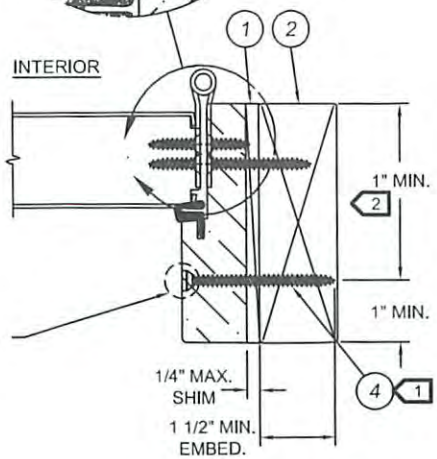

INSWING HINGE JAMB AT FRAME
HORIZONTAL CROSS SECTION

NOTES:

1. FOR PLACEMENT OF ANCHORS IN 2X BUCK OR 1X BUCK IN CONCRETE/MASONRY OPENINGS, SEE SHEET 8.
2. OPTIONALLY, ANCHOR CAN BE PLACED IN NARROW SECTION OF HEAD OR JAMB AS LONG AS MINIMUM EMBEDMENT AND EDGE DISTANCE ARE ACHIEVED.
3. ITEM #6, (#9 X 2 1/2") TO BE INSTALLED IN EACH HINGE AT JOB SITE, CLOSEST TO WEATHERSTRIP.
4. SEE SHEET 12 FOR FASTENER AMOUNTS AND LOCATIONS.
5. AT SILL, PLACE ANCHOR IN SILL BASE MATERIAL FOR MAXIMUM SUPPORT. SINGLE (X) DO NOT REQUIRE ANCHORS IN SILL.
6. ITEM #12, PRESSURE TREATED SPACER TO MATCH ACTIVE INSWING OR OUTSWING SILL HEIGHT WHEN MULLED.

STATE OF TEXAS
ALEXIS SPYROU
102957
LICENSED
PROFESSIONAL ENGINEER

2-4-14

ALEXIS SPYROU
TEXAS P.E. NO. 102957
398 DANIA BEACH BLVD. STE. 338
DANIA BEACH, FL 33004
TBPE FIRM NO. 13734

JELD-WEN WINDOWS & DOORS
3737 Lakeport Blvd.
Klamath Falls, OR 97601
Phone: (541) 882-3451
Fax: (541) 850-2609

PRODUCT: SMOOTH PRO/DESIGN PRO NON-IMPACT 12-0 X 8-0 FLUSH GLAZE W/ 3-0 SIDELITES

PART OR ASSEMBLY: INSWING VERTICAL AND HORIZONTAL SECTIONS IN WOOD

DATE: 1/20/2014
SCALE: NONE
DWG. BY: G.LUBBECKE
CHK. BY: S.SAFFELL
DRAWING No.: A010732
SHEET 6 OF 12

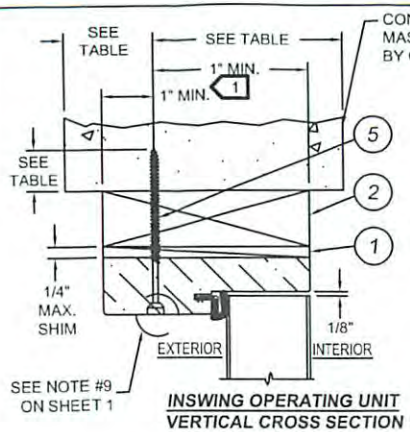

INSWING OPERATING UNIT
VERTICAL CROSS SECTION
HEAD JAMB

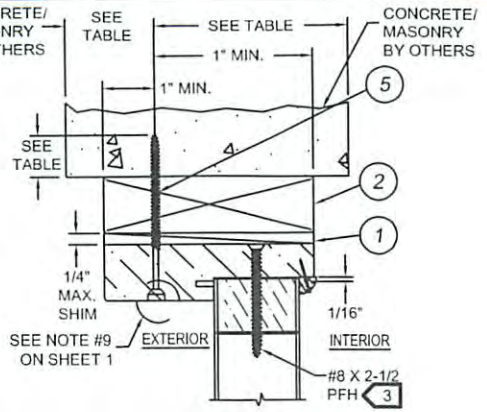

INSWING FIXED UNIT
VERTICAL CROSS SECTION
HEAD JAMB

ANCHOR TABLE				
ANCHOR TYPE	ANCHOR	SUBSTRATE	MIN. EMBED.	MIN. EDGE DISTANCE
A	3/16" ITW TAPCON	CONCRETE/ CMU	1-1/4"	2-1/2"
B	1/4" ELCO ULTRACON	CONCRETE/ CMU	1-3/8"-CONC. 1-1/4"-CMU	1"
C	#10 WOOD SCREW	2X WOOD BUCK OR FRAMING	1-1/2"	1"
D	3/16" ITW TAPCON	CONCRETE/ CMU	1-1/4"	1"

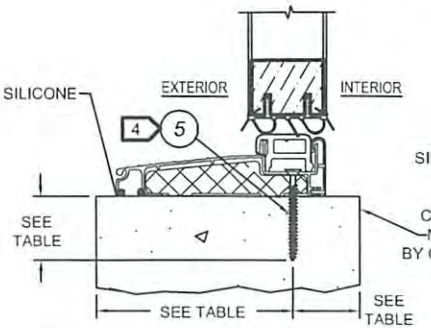

INSWING OPERATING OR FIXED UNIT
VERTICAL CROSS SECTION
ENDURA ZAIL4565

***NOTE: ON SINGLE (X or O) UNITS NO ANCHOR REQUIRED AT THE SILL**

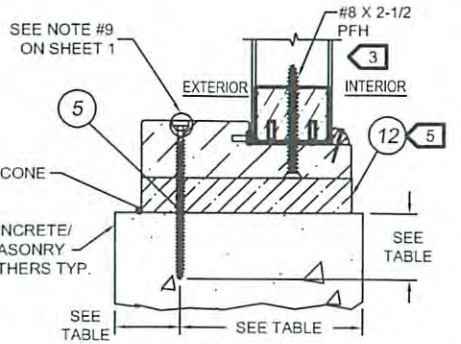

INSWING FIXED UNIT
VERTICAL CROSS SECTION
AT BOXED SILL

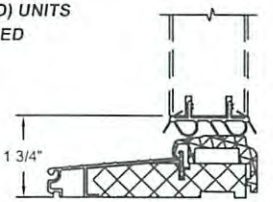

INSWING SINGLE (X) ONLY
(NOT RATED FOR ASTRAGAL USE)
VERTICAL CROSS SECTION
AFCO A-276/P-2000 SILL

***NOTE: ON SINGLE (X) UNITS NO ANCHOR REQUIRED AT THE SILL**

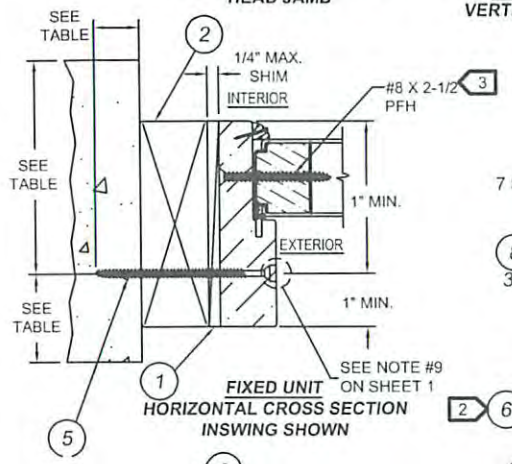

FIXED UNIT
HORIZONTAL CROSS SECTION
INSWING SHOWN

HINGE DETAIL AT JAMB:
7 SCREWS (ITEM #8), 1 SCREW (ITEM #6)
PLACE 4- ITEM #15 INTO PANEL

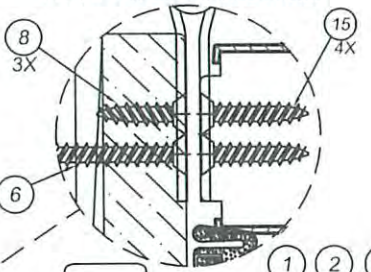

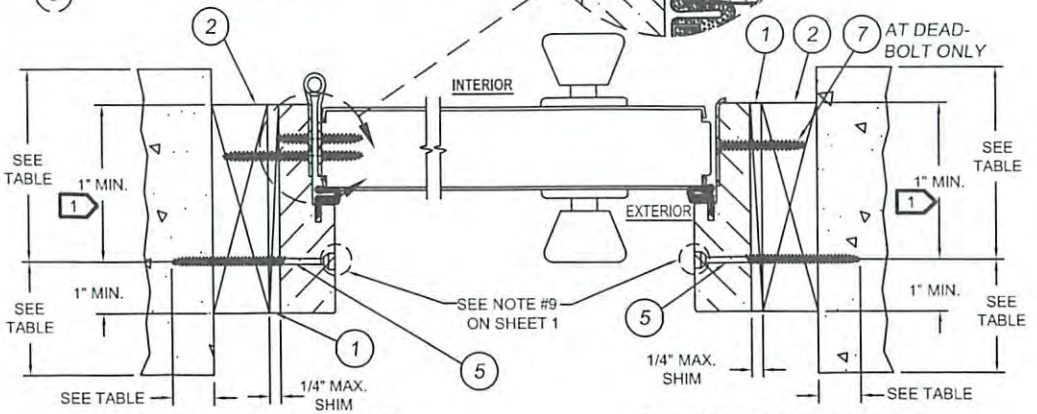

INSWING HINGE JAMB AT FRAME
HORIZONTAL CROSS SECTION

INSWING LATCH JAMB AT FRAME
HORIZONTAL CROSS SECTION

NOTES:

1. OPTIONALLY, ANCHOR CAN BE PLACED IN NARROW SECTION OF HEAD OR JAMB AS LONG AS MINIMUM EMBEDMENT AND EDGE DISTANCE ARE ACHIEVED.
2. ITEM #6, (#9 X 2 1/2") TO BE INSTALLED IN EACH HINGE AT JOB SITE, CLOSEST TO WEATHERSTRIP.
3. SEE SHEET 12 FOR FASTENER AMOUNTS AND LOCATIONS.
4. AT SILL, PLACE ANCHOR IN SILL BASE MATERIAL FOR MAXIMUM SUPPORT. SINGLE (X) DO NOT REQUIRE ANCHORS IN SILL.
5. ITEM #12, PRESSURE TREATED SPACER TO MATCH ACTIVE INSWING OR OUTSWING SILL HEIGHT WHEN MULLED.

STATE OF TEXAS
ALEXIS SPYROU
102957
LICENSED
PROFESSIONAL ENGINEER

ALEXIS SPYROU
TEXAS P.E. NO. 102957
398 DANIA BEACH BLVD. STE. 338
DANIA BEACH, FL 33004
TBPE FIRM NO. 13734

JELD-WEN WINDOWS & DOORS
3737 Lakeport Blvd.
Klamath Falls, OR 97601
Phone: (541) 882-3451
Fax: (541) 850-2609

PRODUCT: SMOOTH PRO/DESIGN PRO NON-IMPACT 12-0 X 8-0 FLUSH GLAZE W/ 3-0 SIDELITES

PART OR ASSEMBLY: INSWING VERTICAL AND HORIZONTAL SECTIONS IN MASONRY/CONCRETE

DATE: 1/20/2014
SCALE: NONE
DWG. BY: G.LUBBECKE
CHK. BY: S.SAFFELL
DRAWING No.: A010732
SHEET 7 OF 12

ANCHOR TABLE				
ANCHOR TYPE	ANCHOR	SUBSTRATE	MIN. EMBED.	MIN. EDGE DISTANCE
A	3/16" ITW TAPCON	CONCRETE/ CMU	1-1/4"	2-1/2"
B	1/4" ELCO ULTRACON	CONCRETE/ CMU	1-3/8"-CONC. 1-1/4"-CMU	1"
C	#10 WOOD SCREW	2X WOOD BUCK OR FRAMING	1-1/2"	1"
D	3/16" ITW TAPCON	CONCRETE/ CMU	1-1/4"	1"

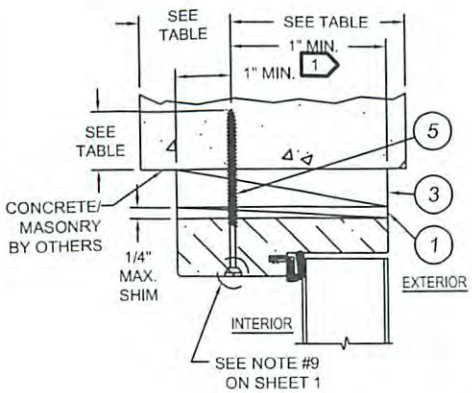

OUTSWING OPERATING UNIT
VERTICAL CROSS SECTION
OPTIONAL 1X BUCK

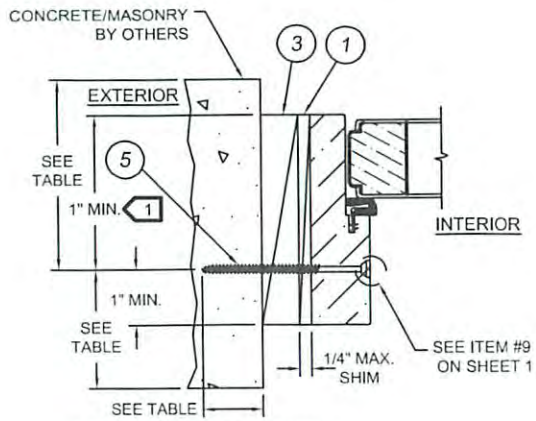

OUTSWING OPERATING UNIT
HORIZONTAL CROSS SECTION
OPTIONAL 1X BUCK

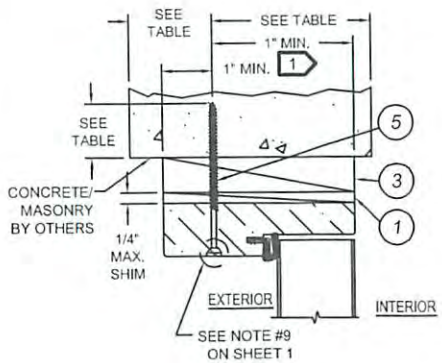

INSWING OPERATING UNIT
VERTICAL CROSS SECTION
OPTIONAL 1X BUCK

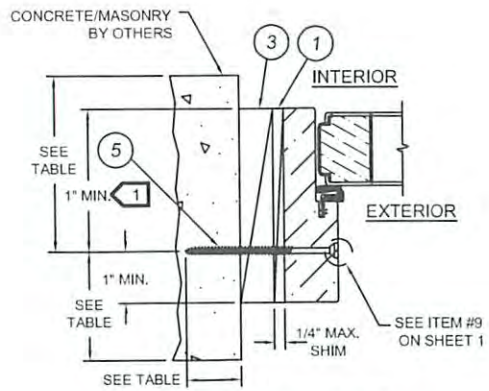

INSWING OPERATING UNIT
HORIZONTAL CROSS SECTION
OPTIONAL 1X BUCK

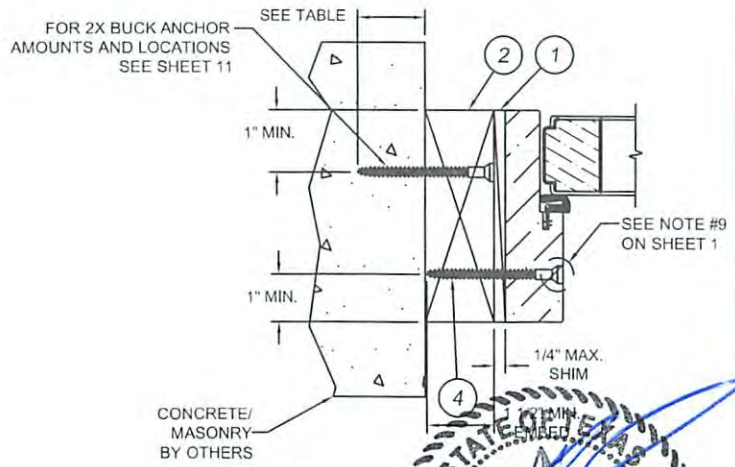

OPTIONAL MASONRY/CONCRETE INSTALL USING 2X BUCK
CROSS SECTION OF HEAD JAMB OR SIDE JAMB

NOTES:
1. OPTIONALLY, ANCHOR CAN BE PLACED IN NARROW SECTION OF HEAD OR JAMB AS LONG AS MINIMUM EMBEDMENT AND EDGE DISTANCE ARE ACHIEVED.

STATE OF TEXAS
ALEXIS SPYROU
102957
LICENSED
PROFESSIONAL ENGINEER

2-4-14

ALEXIS SPYROU
TEXAS P.E. NO. 102957
398 DANIA BEACH BLVD. STE. 338
DANIA BEACH, FL 33004
TBPE FIRM NO. 13734

JELD-WEN WINDOWS & DOORS
3737 Lakeport Blvd.
Klamath Falls, OR 97601
Phone: (541) 882-3451
Fax: (541) 850-2609

PRODUCT: SMOOTH PRO/DESIGN PRO NON-IMPACT 12-0 X 8-0 FLUSH GLAZE W/ 3-0 SIDELITES

PART OR ASSEMBLY: OPTIONAL ANCHORING DETAILS

DATE: 1/20/2014
SCALE: NONE
DWG. BY: G.LUBBECKE
CHK. BY: S.SAFFELL
DRAWING No.: A010732
SHEET 8 OF 12

NOTE:
SHIM FOR SUPPORT AT OR NEAR EACH ANCHOR IS REQUIRED

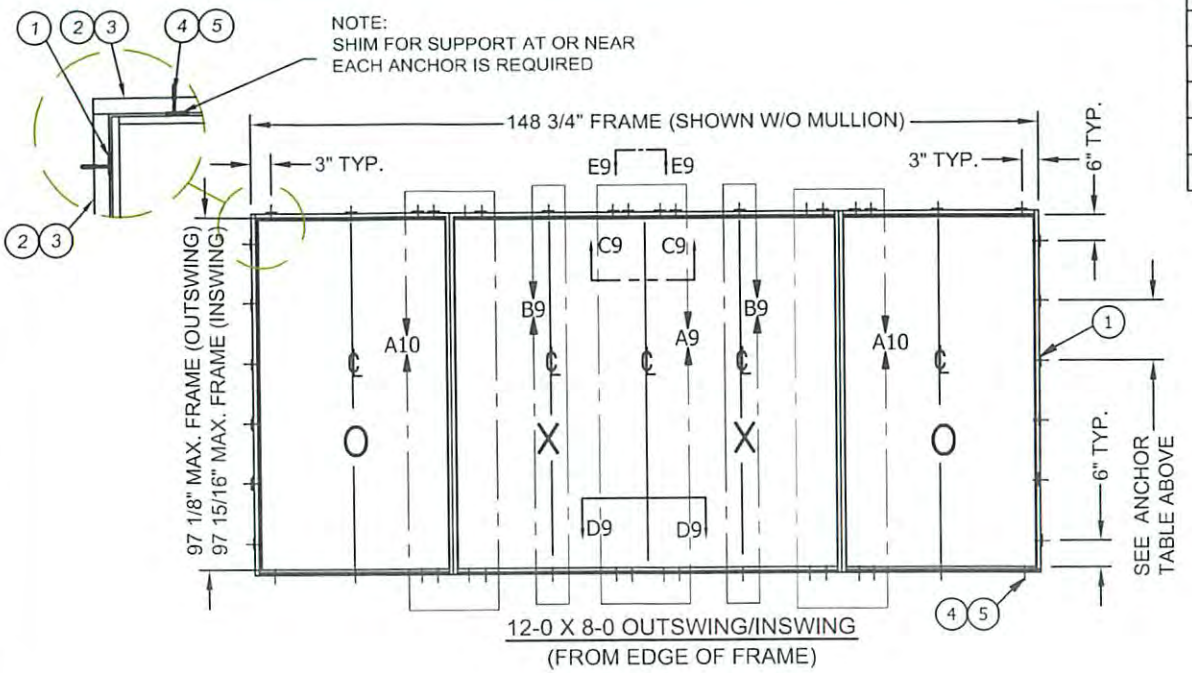

12-0 X 8-0 OUTSWING/INSWING
(FROM EDGE OF FRAME)

ANCHOR SCHEDULE

ANCHOR TYPE	ANCHOR	SUBSTRATE	MIN. EMBED.	MIN. EDGE DISTANCE	MAX. O.C. SPACING AT JAMBS
A	3/16" ITW TAPCON	CONCRETE/ CMU	1-1/4"	2-1/2"	17-1/4"
B	1/4" ELCO ULTRACON	CONCRETE/ CMU	1-3/8"-CONC. 1-1/4"-CMU	1"	17-1/4"
C	#10 WOOD SCREW	2X WOOD BUCK OR FRAMING	1-1/2"	1"	17-1/4"
D	3/16" ITW TAPCON	CONCRETE/ CMU	1-1/4"	1"	14-3/8"

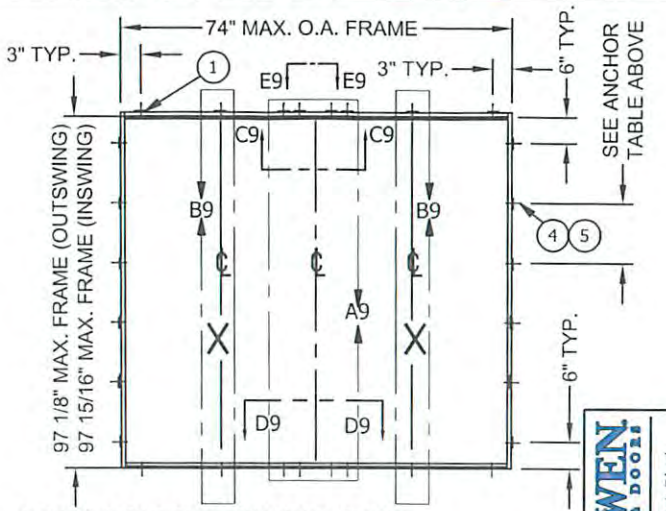

6-0 X 8-0 OUTSWING/INSWING (XX)
(FROM EDGE OF FRAME)

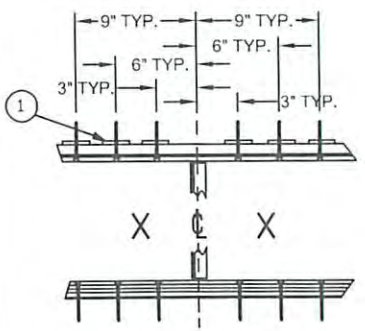

DETAIL A9.1
(12) ANCHOR LOCATIONS AT ASTRAGAL
TYPE D ANCHORS ONLY

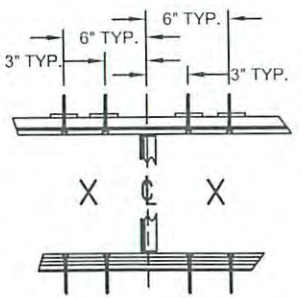

DETAIL A9.2
(8) ANCHOR LOCATIONS AT ASTRAGAL
TYPE A, B & C ANCHORS ONLY

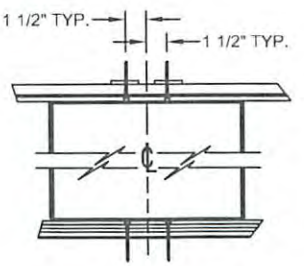

DETAIL B9.1
(4) ANCHOR LOCATIONS AT ACTIVE PANEL CENTERLINE
TYPE D ANCHORS ONLY

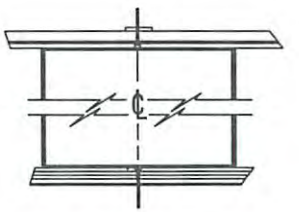

DETAIL B9.2
(2) ANCHOR LOCATIONS AT ACTIVE PANEL CENTERLINE
TYPE A,B & C ANCHORS ONLY

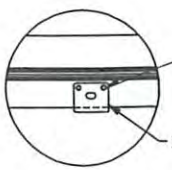

DETAIL C9-C9
OUTSWING OR INSWING

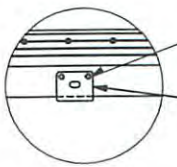

DETAIL D9-D9
OUTSWING ONLY

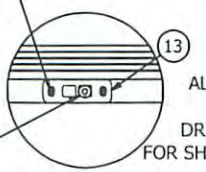

DETAIL D9-D9
INSWING ONLY

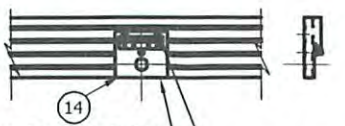

DETAIL E9-E9
INSWING OR OUTSWING W/ ASTRAGAL

STATE OF TEXAS
ALEXIS SPYROU
102957
LICENSED
PROFESSIONAL ENGINEER
2/7/14

ALEXIS SPYROU
TEXAS P.E. NO. 102957
398 DANIA BEACH BLVD. STE. 338
DANIA BEACH, FL 33004
TBPE FIRM NO. 13734

JELD-WEN WINDOWS & DOORS
3737 Lakeport Blvd.
Klamath Falls, OR 97601
Phone: (541) 882-3451
Fax: (541) 850-2609

PRODUCT: SMOOTH PRO/DESIGN PRO NON-IMPACT 12-0 X 8-0 FLUSH GLAZE W/ 3-0 SIDELITES

PART OR ASSEMBLY: OXXO INSWING AND OUTSWING ANCHORING DETAILS

DATE: 1/20/2014
SCALE: NONE
DWG. BY: G.LUBBECKE
CHK. BY: S.SAFFELL
DRAWING No.: A010732
SHEET 9 OF 12

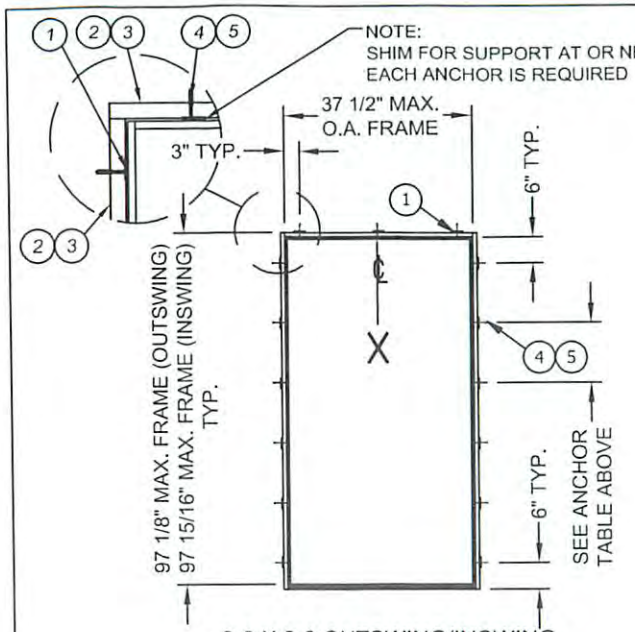

3-0 X 8-0 OUTSWING/INSWING
(FROM EDGE OF FRAME)

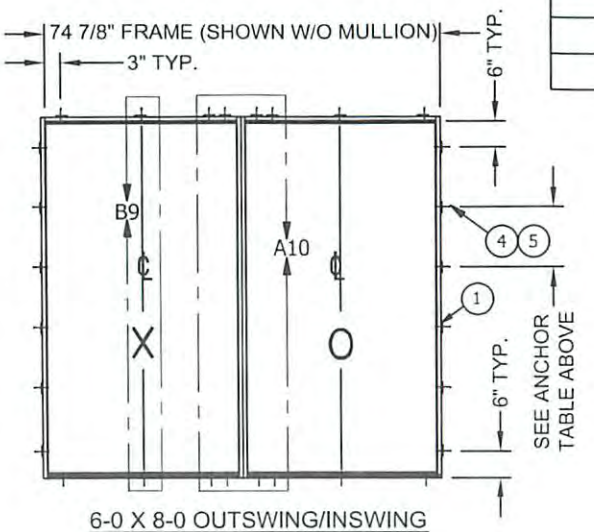

6-0 X 8-0 OUTSWING/INSWING
(FROM EDGE OF FRAME)

ANCHOR SCHEDULE

ANCHOR TYPE	ANCHOR	SUBSTRATE	MIN. EMBED.	MIN. EDGE DISTANCE	MAX. O.C. SPACING AT JAMBS
A	3/16" ITW TAPCON	CONCRETE/ CMU	1-1/4"	2-1/2"	17-1/4"
B	1/4" ELCO ULTRACON	CONCRETE/ CMU	1-3/8"-CONC. 1-1/4"-CMU	1"	17-1/4"
C	#10 WOOD SCREW	2X WOOD BUCK OR FRAMING	1-1/2"	1"	17-1/4"
D	3/16" ITW TAPCON	CONCRETE/ CMU	1-1/4"	1"	14-3/8"

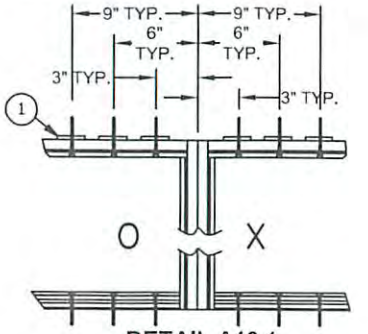

DETAIL A10.1
(12) ANCHORS AT MULL
(BACK-TO-BACK)
TYPE D ANCHORS ONLY

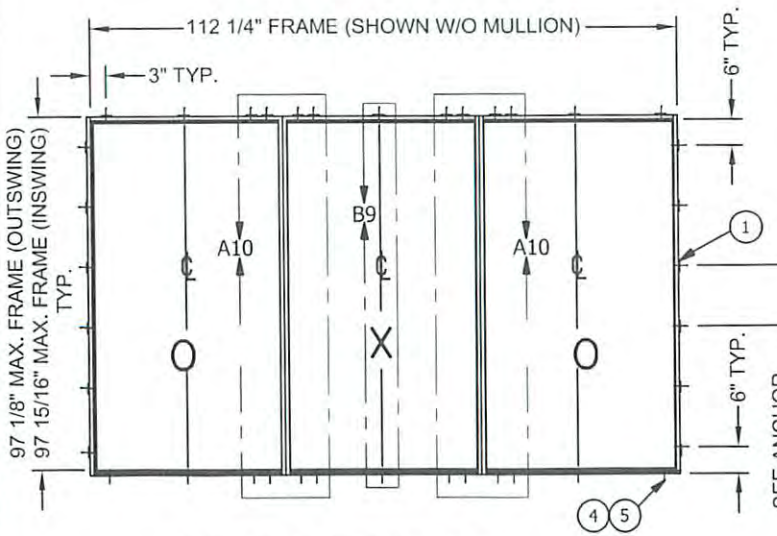

9-0 X 8-0 OUTSWING/INSWING
(FROM EDGE OF FRAME)

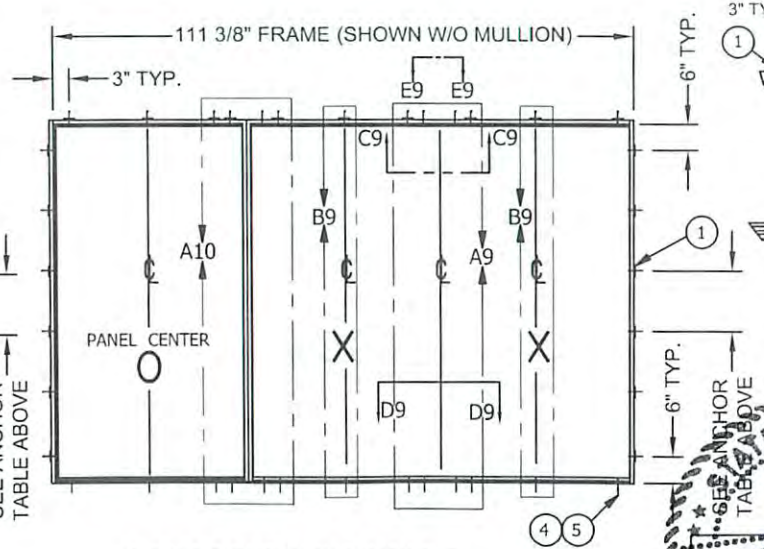

9-0 X 8-0 OUTSWING/INSWING
(FROM EDGE OF FRAME)

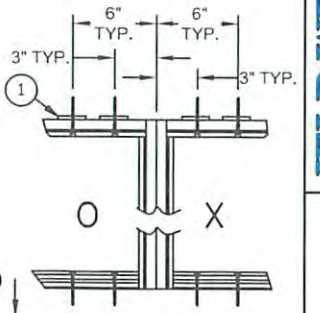

DETAIL A10.2
(8) ANCHORS AT MULL
(BACK-TO-BACK)
TYPE A,B & C
ANCHORS ONLY

STATE OF TEXAS
ALEXIS SPYROU
102957
LICENSED
PROFESSIONAL ENGINEER

2-2-14

ALEXIS SPYROU
TEXAS P.E. NO. 102957
398 DANIA BEACH BLVD. STE. 338
DANIA BEACH, FL 33004
TBPE FIRM NO. 13734

JELD-WEN WINDOWS & DOORS
3737 Lakeport Blvd.
Klamath Falls, OR 97601
Phone: (541) 882-3451
Fax: (541) 850-2609

PRODUCT: SMOOTH PRO/DESIGN PRO NON-IMPACT 12-0 X 8-0 FLUSH GLAZE W/ 3-0 SIDELITES

PART OR ASSEMBLY: OXO INSWING AND OUTSWING ANCHORING DETAILS

DATE: 1/20/2014
SCALE: NONE
DWG. BY: G.LUBBECKE
CHK. BY: S.SAFFELL
DRAWING No.: A010732
SHEET 10 OF 12

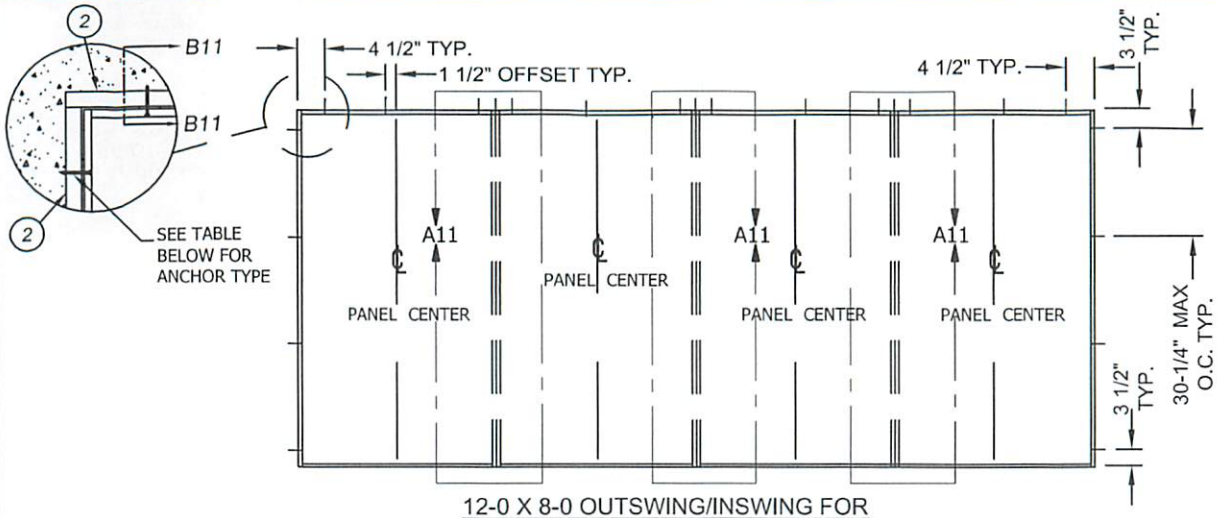

12-0 X 8-0 OUTSWING/INSWING FOR OPTIONAL 2X BUCK IN CONCRETE/MASONRY
(23) ANCHOR LOCATIONS
(FROM EDGE OF 2 X BUCK)

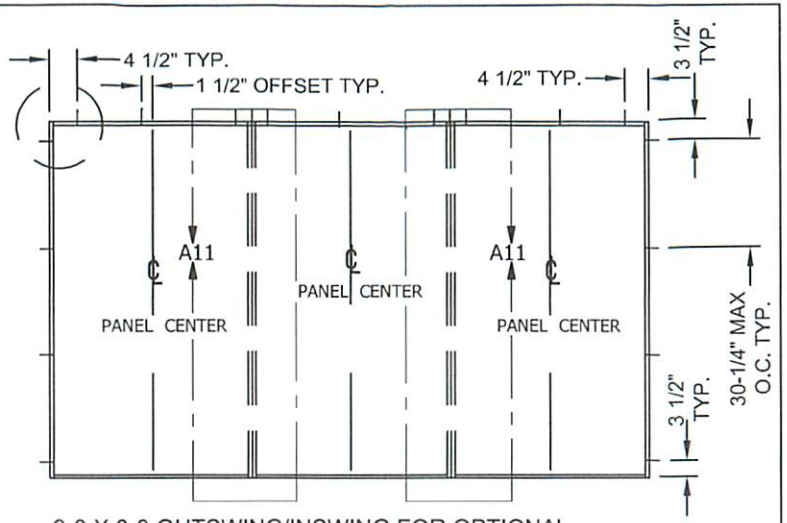

9-0 X 8-0 OUTSWING/INSWING FOR OPTIONAL 2X BUCK IN CONCRETE/MASONRY
(19) ANCHOR LOCATIONS
(FROM EDGE OF 2 X BUCK)

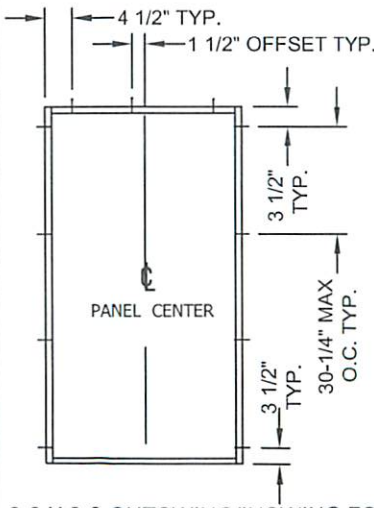

3-0 X 8-0 OUTSWING/INSWING FOR OPTIONAL 2X BUCK IN CONCRETE/MASONRY
(11) ANCHOR LOCATIONS
(FROM EDGE OF 2 X BUCK)

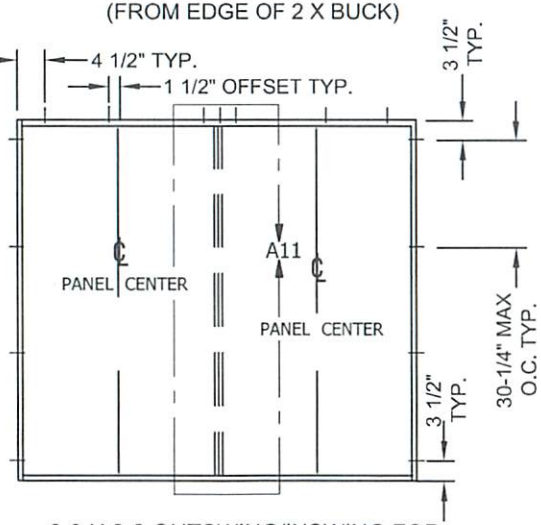

6-0 X 8-0 OUTSWING/INSWING FOR OPTIONAL 2X BUCK IN CONCRETE/MASONRY
(15) ANCHOR LOCATIONS
(FROM EDGE OF 2 X BUCK)

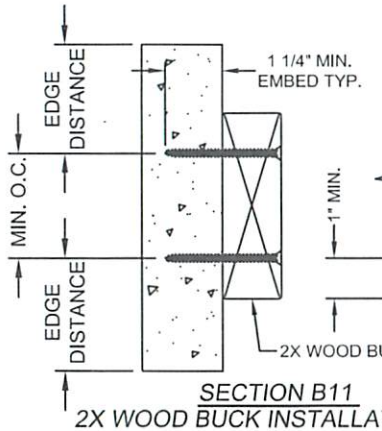

SECTION B11
2X WOOD BUCK INSTALLATION

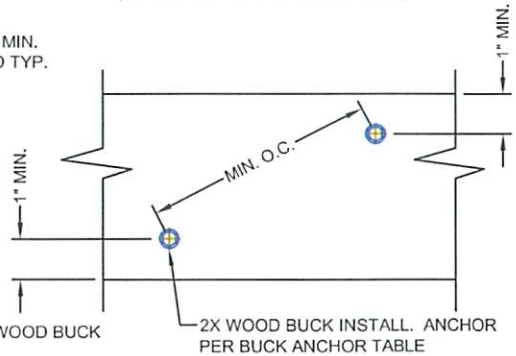

2X WOOD BUCK INSTALLATION
SIDE VIEW

2X BUCK ANCHOR TABLE:

ANCHOR TYPE	MIN. EMBED.	MIN. EDGE DISTANCE	MIN. O.C. SPACING
1/4" ITW TAPCON	1-1/4"	2-1/2"	4"
1/4" ELCO ULTRACON	1-3/8"-CONC. 1-1/4"-CMU	1"	

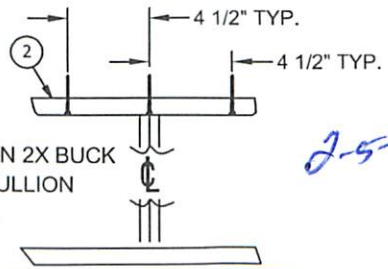

DETAIL A11
(3) ANCHOR LOCATIONS IN 2X BUCK AT BACK-TO-BACK MULLION OR ASTRAGAL

NOTES:

1. MASONRY ANCHOR LOCATIONS MAY BE ADJUSTED TO MAINTAIN MIN. EDGE DISTANCE TO MORTAR JOINTS. SHOULD ADJUSTMENT RESULT IN MAX. O.C. SPACING TO BE EXCEEDED, ADDITIONAL MASONRY ANCHORS SHALL BE USED TO COMPLY WITH MAX. O.C. REQUIREMENT.
2. 2X WOOD BUCK IS NOT FOR INSTALLATION AT SILL. THRESHOLD SHALL BE FASTENED IN ACCORDANCE WITH ANCHOR LOCATIONS SHOWN ON SHEETS 9 & 10.

STATE OF TEXAS
ALEXIS SPYROU
102957
LICENSED
PROFESSIONAL ENGINEER

2-5-14

ALEXIS SPYROU
TEXAS P.E. NO. 102957
398 DANIA BEACH BLVD. STE. 338
DANIA BEACH, FL 33004
TBPE FIRM NO. 13734

JELD-WEN WINDOWS & DOORS
3737 Lakeport Blvd.
Klamath Falls, OR 97601
Phone: (541) 882-3451
Fax: (541) 850-2609

PRODUCT: SMOOTH PRO/DESIGN PRO NON-IMPACT 12-0 X 8-0 FLUSH GLAZE W/ 3-0 SIDELITES

PART OR ASSEMBLY: OPTIONAL 2X BUCK ANCHORING DETAILS

DATE: 1/20/2014
SCALE: NONE
DWG. BY: G.LUBBECKE
CHK. BY: S.SAFFELL
DRAWING No.: A010732
SHEET 11 OF 12

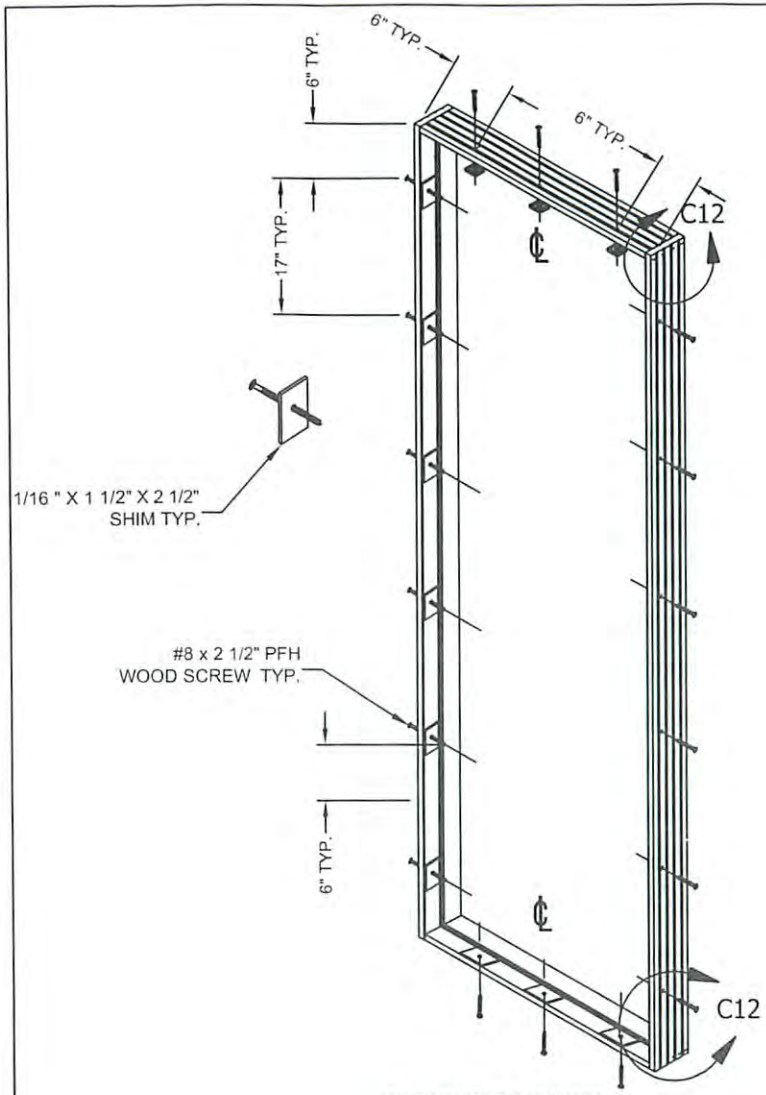

INSWING/OUTSWING
PANEL ATTACHMENT
18 THROUGH FRAME/SHIM INTO PANEL

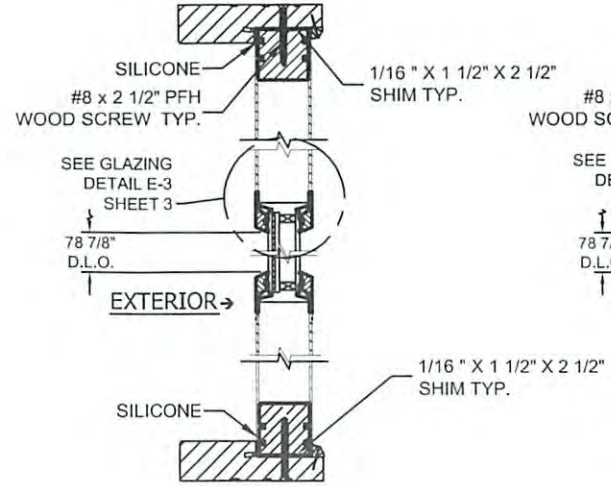

SECTION A12
INSWING
FULL LITE FIXED PANEL

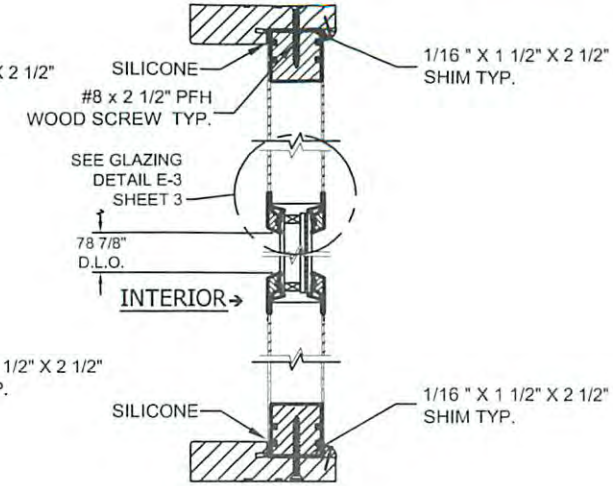

SECTION A12
OUTSWING
FULL LITE FIXED PANEL

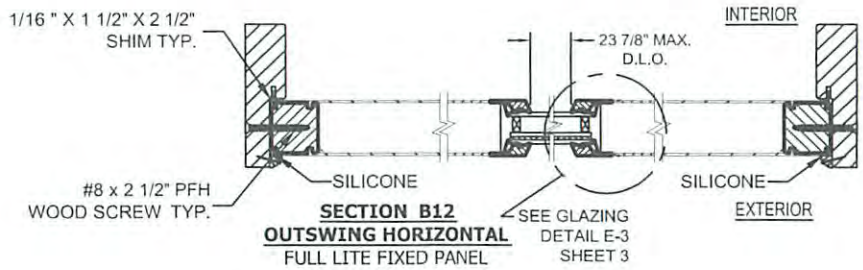

SECTION B12
OUTSWING HORIZONTAL
FULL LITE FIXED PANEL

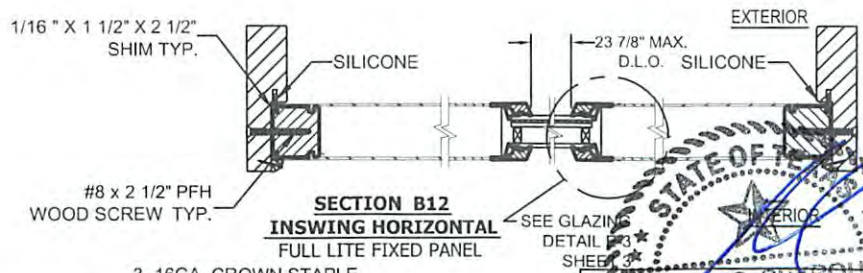

SECTION B12
INSWING HORIZONTAL
FULL LITE FIXED PANEL

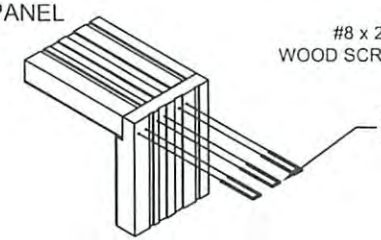

DETAIL C12
(3) FRAME FASTENERS AT
EACH CORNER

STATE OF TEXAS
ALEXIS SPYROU
102957
LICENSED
PROFESSIONAL ENGINEER

2-2-14

ALEXIS SPYROU
TEXAS P.E. NO. 102957
398 DANIA BEACH BLVD. STE. 338
DANIA BEACH, FL 33004
TBPE FIRM NO. 13734

JELD-WEN WINDOWS & DOORS
3737 Lakeport Blvd.
Klamath Falls, OR 97601
Phone: (541) 882-3451
Fax: (541) 850-2609

PRODUCT: SMOOTH PRO/DESIGN PRO NON-IMPACT
12-0 X 8-0 FLUSH GLAZE W/ 3-0 SIDELITES

PART OR ASSEMBLY: FIXED PANEL TO FRAME ATTACHMENT DETAILS

DATE:	1/20/2014
SCALE:	NONE
DWG. BY:	G.LUBBECKE
CHK. BY:	S.SAFFELL
DRAWING No.:	A010732
SHEET	12 OF 12