ODL
215 EAST ROOSEVELT AVE.
ZEELAND, MI 49464

FIBERGLASS ENTRY DOOR
INSWING
"IMPACT"

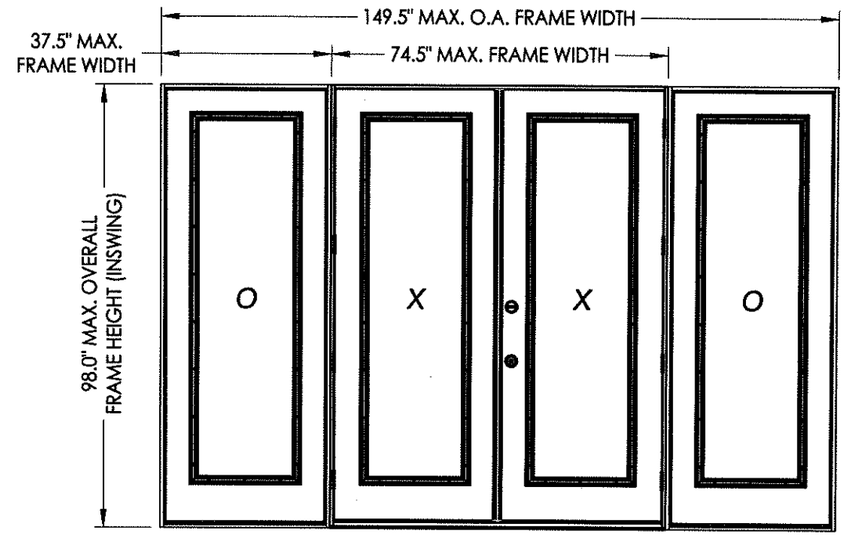

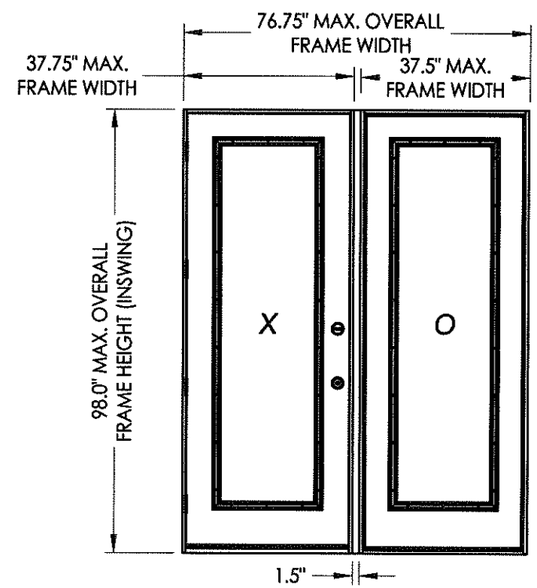

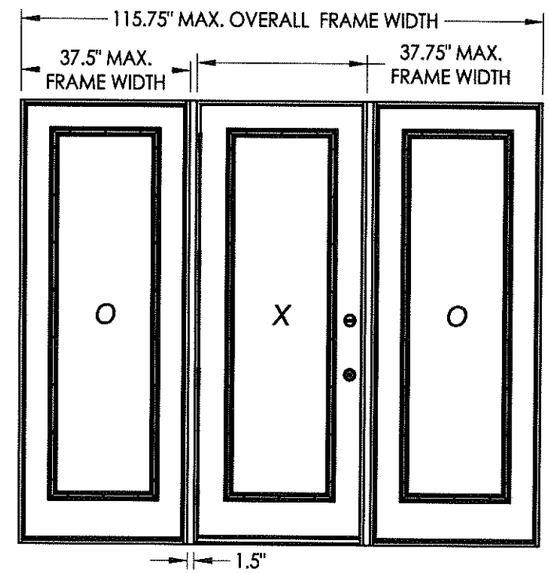

EVALUATED FOR USE IN THE STATE OF TEXAS

The Fiberglass Glazed Door described herein complies with the 2006 International Residential Code (IRC), Sections R301 & R613 and the 2006 International Building Code (IBC), Sections 1405.12, 1609, 1714.5, 2403 and 2404 (including Texas revisions) subject to the following conditions:

1. Anchors shall be as listed and spaced as shown in the details. Anchor embedment to base material shall be beyond wall dressing or stucco.
2. This system has been tested and evaluated as a large missile impact protective system for installation in the Seaward, Inland I and Inland II areas. This product meets missile level "D" as defined in ASTM E 1996.
3. Allowable design pressure requirements must be equal to or less than the design pressure rating shown in the design pressure chart, sheet 1 of this drawing.
4. Conditions not covered by this drawing are subject to further engineering analysis.

CONFIGURATION	MAX. FRAME DIMENSION	DESIGN PRESSURE (PSF) INSWING	
		POSITIVE	NEGATIVE
OX/XO	76.75" x 98.0"	+35.0	-40.0
OXO	115.75" x 98.0"	+35.0	-40.0
OXXO	149.5" x 98.0"	+35.0	-40.0

TABLE OF CONTENTS

SHEET #	DESCRIPTION
1	Typical elevations, design pressures & general notes
2	Door/Sidelite panel details
3	Lite frame and glazing details
4	Elevations & hardware table
5	Horizontal cross sections
6	Vertical cross sections
7	Frame anchoring
8	Astragal details
9	Bill of materials & components

STATE OF TEXAS
LYNDON F. SCHMIDT
104123
LICENSED
PROFESSIONAL ENGINEER
10.14

Documents Prepared By: Lyndon F. Schmidt, P.E.
TEXAS P.E. #104123
RW BUILDING CONSULTANTS, INC.
P.O. Box 230 Valrico FL. 33595
Phone No.: 813.659.9197
TEXAS BOARD OF PROFESSIONAL ENGINEERS
CERTIFICATE OF REGISTRATION # F-11852

PRODUCT: FIBERGLASS DOOR
PART OR ASSEMBLY: TYPICAL ELEVATION, DESIGN PRESSURES & GENERAL NOTES

NO.	DATE	REVISIONS	BY

DATE: 6/13/13
SCALE: N.T.S.
DWG. BY: JK
CHK. BY: LFS
DRAWING NO.: TX-4377
SHEET 1 OF 9

© 2013 R.W. BUILDING CONSULTANTS INC.

R:\A - Projects\Project Folders\Proj 1701 - 1800\PF 1718\D. RWBC Drawings\ODL Plastpro\TX-4376-77.dwg, TX-4377

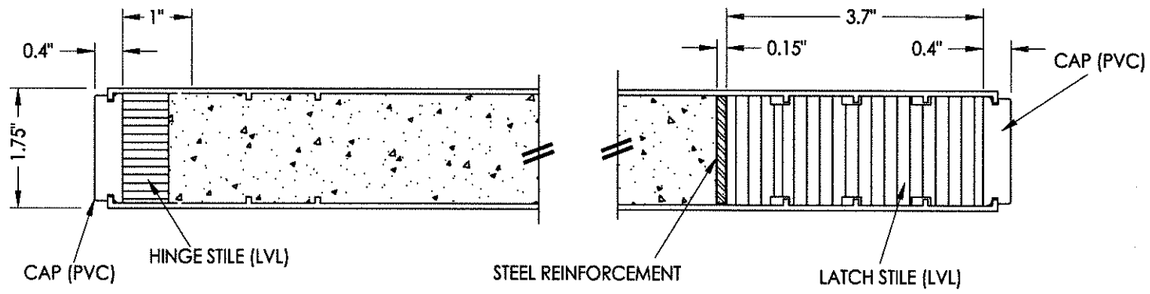

1/2 **HORIZONTAL CROSS SECTION**

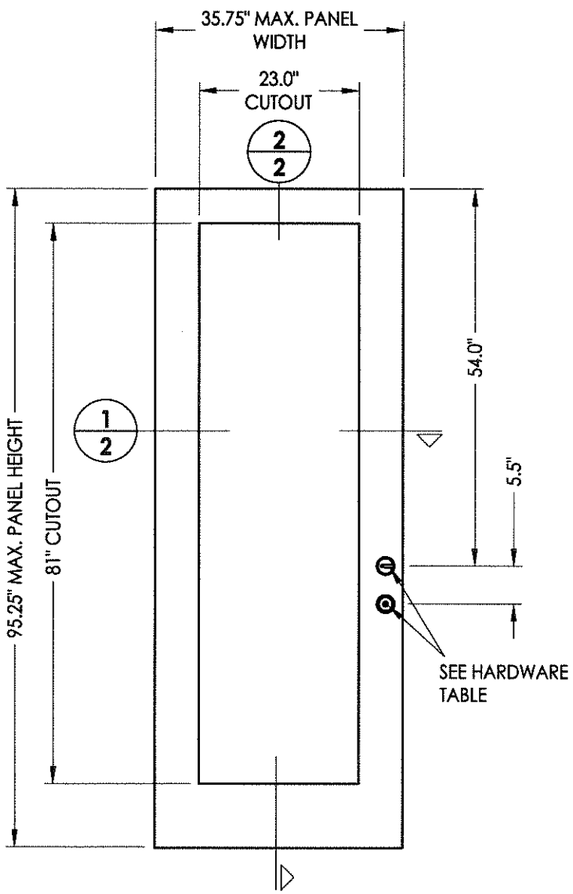

40 **DOOR PANEL**
Plastpro

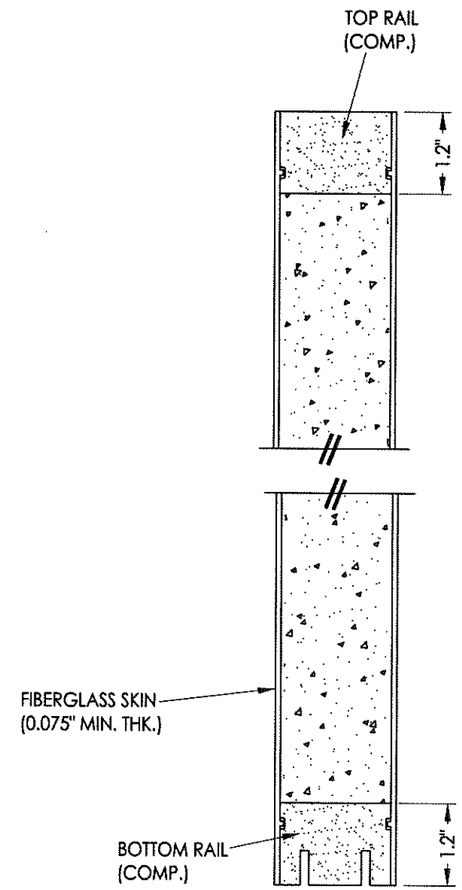

2/2 **VERTICAL CROSS SECTION**

STATE OF TEXAS
LYNDON F. SCHMIDT
104123
LICENSED PROFESSIONAL ENGINEER

7.10.14

Documents Prepared By: Lyndon F. Schmidt, P.E.
TEXAS P.E. #104123

RW BUILDING CONSULTANTS, INC.
P.O. Box 230 Valrico FL 33595
Phone No.: 813.659.9197

TEXAS BOARD OF PROFESSIONAL ENGINEERS
CERTIFICATE OF REGISTRATION # F-11852

PRODUCT: FIBERGLASS DOOR

PART OR ASSEMBLY: DOOR/SIDELITE PANEL DETAILS

NO.	DATE	BY

REVISIONS

DATE: 6/13/13
SCALE: N.T.S.
DWG. BY: JK
CHK. BY: LFS
DRAWING NO.: TX-4377
SHEET 2 OF 9

© 2013 R.W. BUILDING CONSULTANTS INC.

R:\A - Projects\Project Folders\Proj 1701 - 1800\PF 1718\D. RWBC Drawings\ODL Plastpro\TX-4376-77.dwg, 2.2

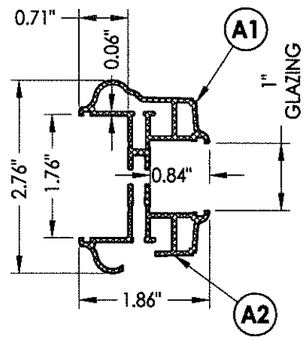

ODL LITE FRAME CROSS SECTION
1" GLAZING

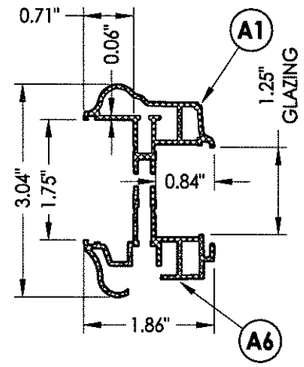

ODL LITE FRAME CROSS SECTION
1.25" GLAZING

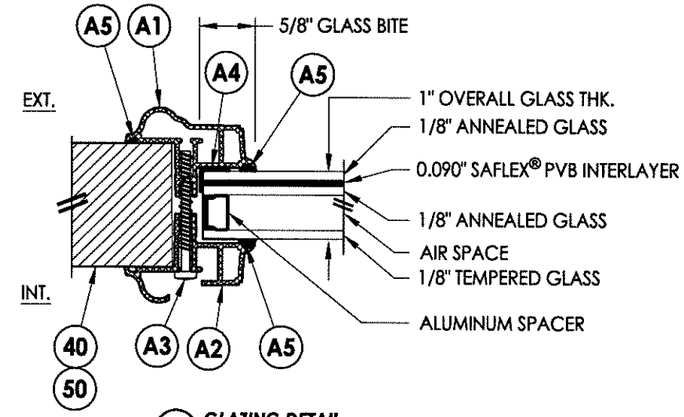

G1 GLAZING DETAIL

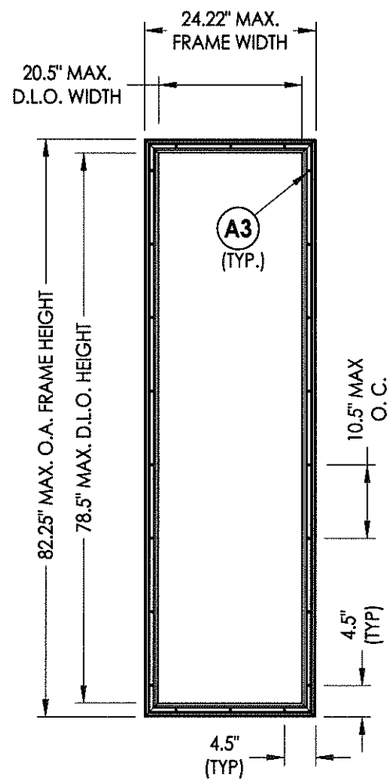

ODL LITE FRAME

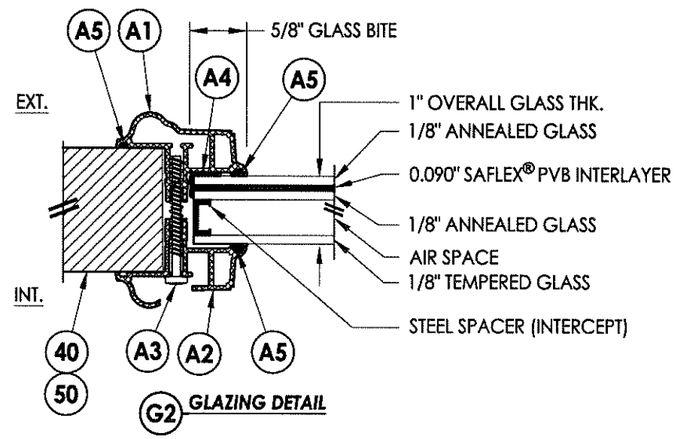

G2 GLAZING DETAIL

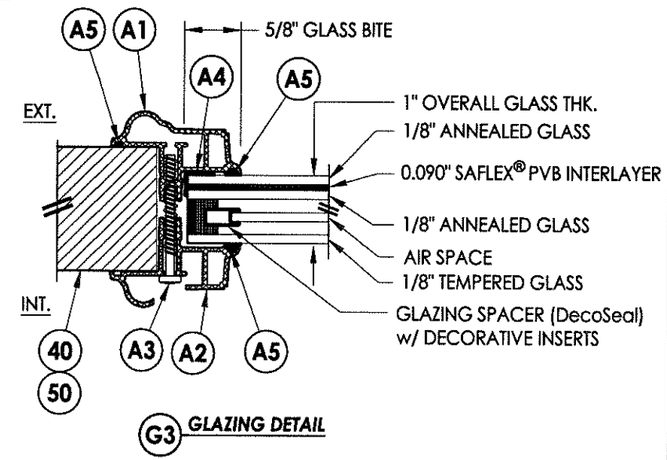

G3 GLAZING DETAIL

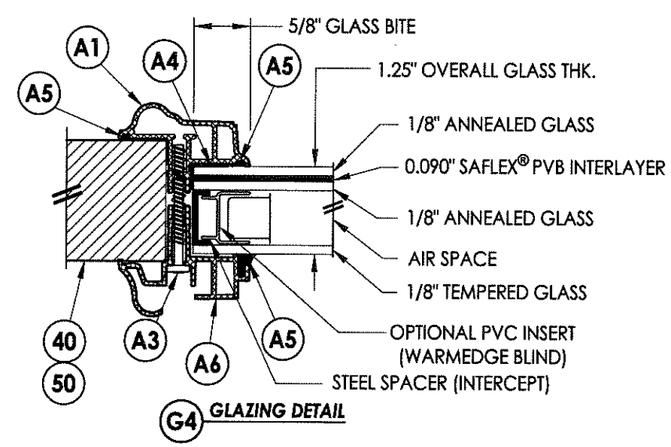

G4 GLAZING DETAIL

MAX. DESIGN PRESSURE FOR G4 GLAZING
INSWING = +30/-30 PSF

BILL OF MATERIALS (LITE FRAME & GLAZING DETAILS)

ITEM #	DESCRIPTION	MATERIAL
A1	EXTERIOR FRAME	ALUM.
A2	INTERIOR FRAME (1" GLAZING)	ALUM.
A3	#7-19 X 1-3/4" PPH SELF-DRILLING SMS	STEEL
A4	DOW 995 STRUCTURAL ADHESIVE	SILICONE
A5	NON STRUCTURAL BACKBEDDING SEALANT (READISEAL)	-
A6	INTERIOR FRAME (1" GLAZING)	ALUM.

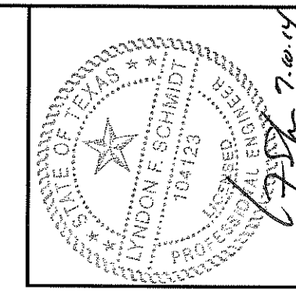

Documents Prepared By: Lyndon F. Schmidt, P.E.
TEXAS P.E. #104123
RW BUILDING CONSULTANTS, INC.
P.O. Box 230 Valrico FL. 33595
Phone No.: 813.659.9197
TEXAS BOARD OF PROFESSIONAL ENGINEERS
CERTIFICATE OF REGISTRATION # F-11852

PRODUCT: FIBERGLASS DOOR

PART OR ASSEMBLY: LITE FRAME & GLAZING DETAILS

NO.	DATE	REVISIONS	BY

DATE: 6/13/13
SCALE: N.T.S.
DWG. BY: JK
CHK. BY: LFS
DRAWING NO.: TX-4377
SHEET 3 OF 9

© 2013 R.W. Building Consultants Inc.

R:\A - Projects\Project Folders\Proj 1701 - 1800\PF 1718\D. RWBC Drawings\ODL Plastpro\TX-4376-77.dwg, 3.2

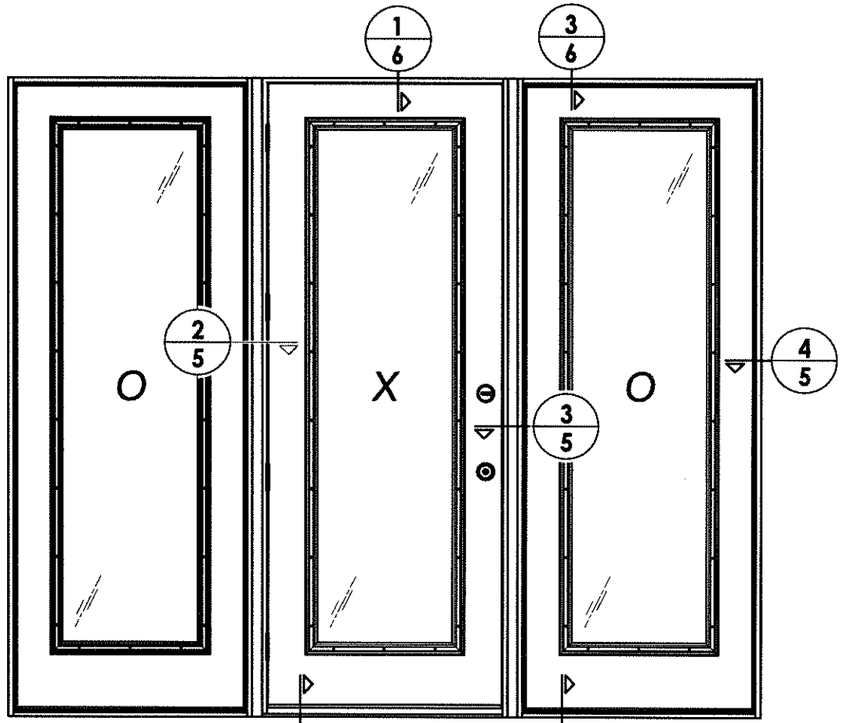

ELEVATION
OXO

HARDWARE TABLE		
MANUFACTURER	MODEL	
KWIKSET	KNOB: DEADBOLT:	SIGNATURE SERIES SIGNATURE SERIES (980)
SCHLAGE	KNOB: DEADBOLT:	"F" SERIES (F60) "B" SERIES (B60/62)
PAMEX*	KNOB: DEADBOLT:	"FT" SERIES "FD7" SERIES

*MAX. DESIGN PRESSURE FOR PAMEX LOCK
INSWING = +30/-30 PSF

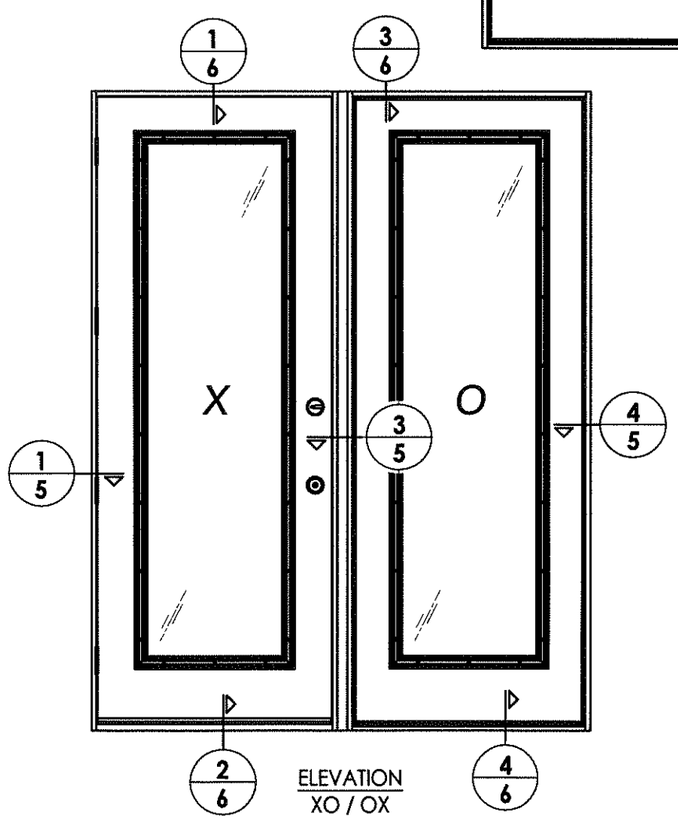

ELEVATION
XO / OX

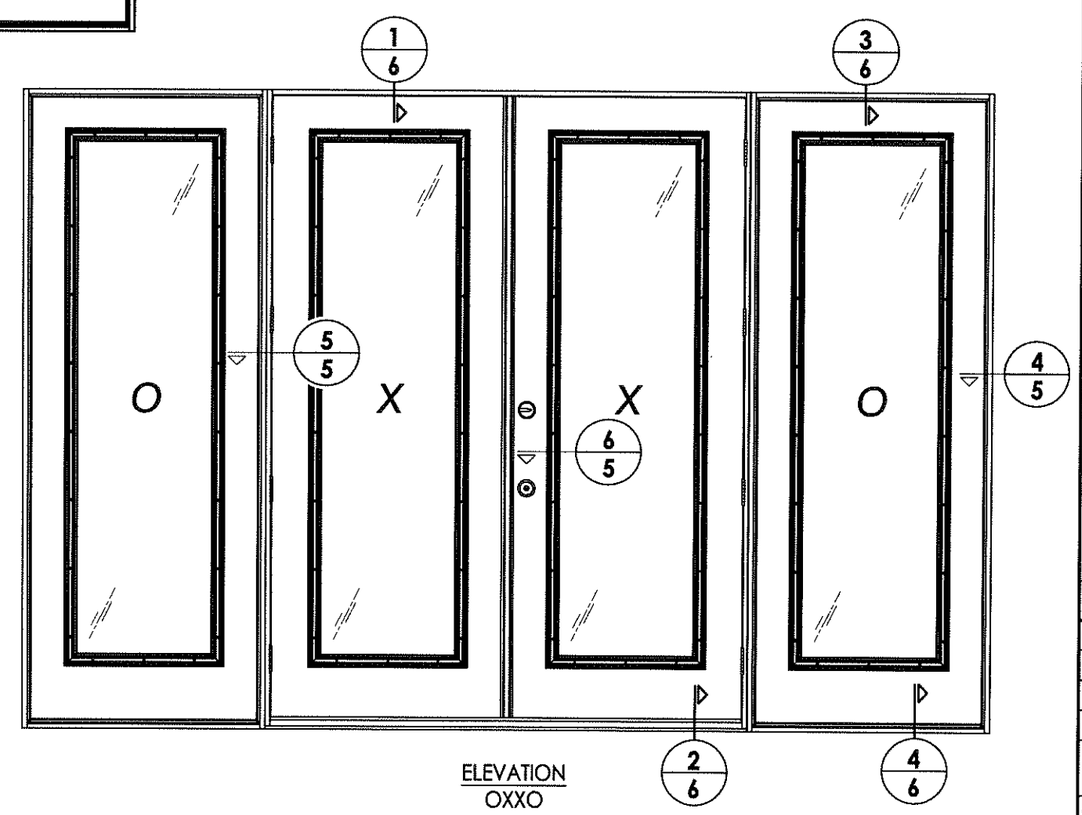

ELEVATION
OXXO

STATE OF TEXAS
LYNDON F. SCHMIDT
104123
LICENSED
PROFESSIONAL ENGINEER
7-10-14

Documents Prepared By: Lyndon F. Schmidt, P.E.
TEXAS P.E. #104123

RW BUILDING CONSULTANTS, INC.
P.O. Box 230 Valrico FL. 33595
Phone No.: 813.659.9197

TEXAS BOARD OF PROFESSIONAL ENGINEERS
CERTIFICATE OF REGISTRATION # F-11852

PRODUCT: FIBERGLASS DOOR

PART OR ASSEMBLY: ELEVATIONS & HARDWARE TABLE

NO.	DATE	BY

REVISIONS

DATE: 6/13/13
SCALE: N.T.S.
DWG. BY: JK
CHK. BY: LFS
DRAWING NO.: TX-4377
SHEET 4 OF 9

© 2013 R.W. BUILDING CONSULTANTS INC.

R:\A - Projects\Project Folders\Proj 1701 - 1800\PF 1718\D. RWBC Drawings\ODL Plastpro\TX-4376-77.dwg, 4.2

NOTE:
1. Sidelite panel screws located 6" from each end plus 5 more equally spaced (7 screws total).

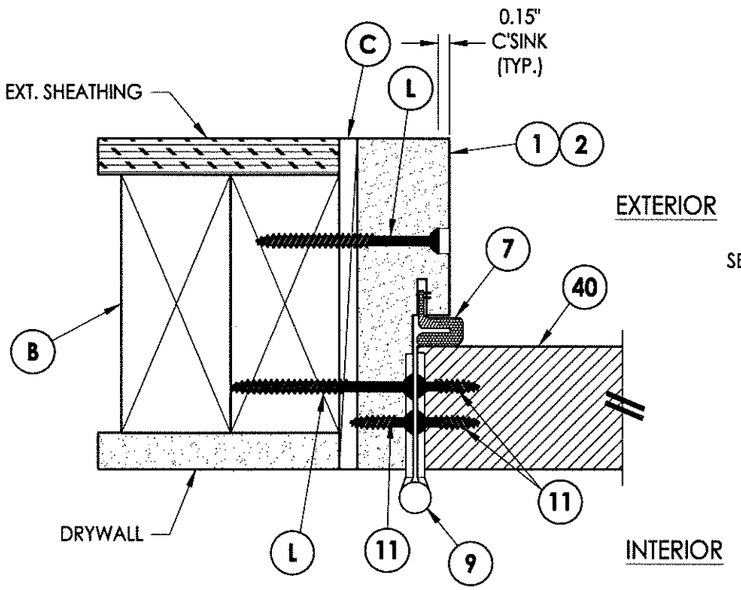

1/5 HORIZONTAL CROSS SECTION

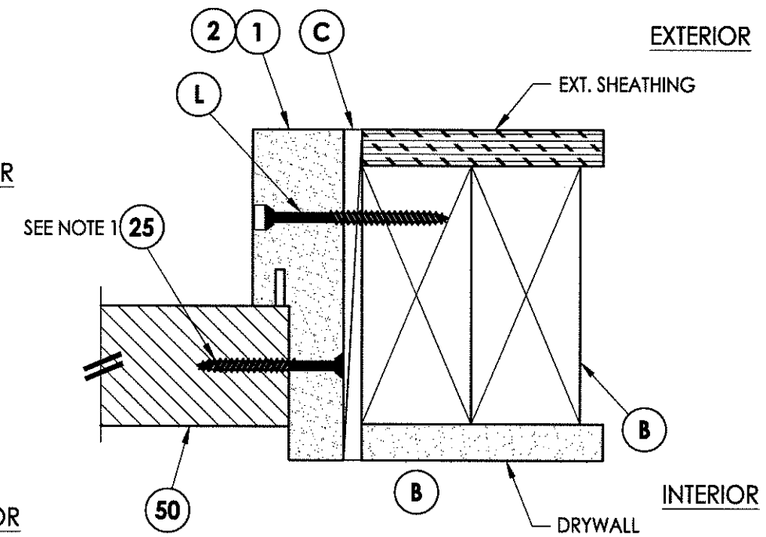

4/5 HORIZONTAL CROSS SECTION

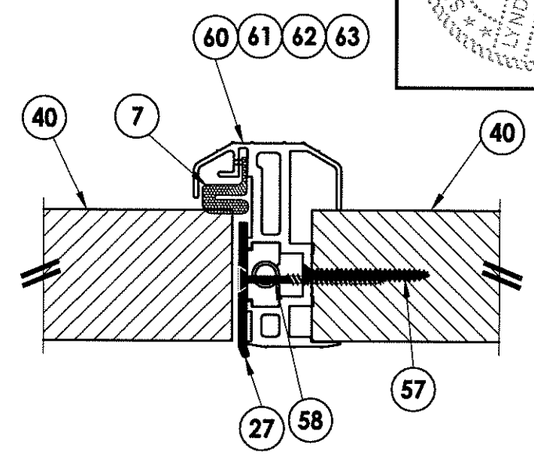

6/5 HORIZONTAL CROSS SECTION

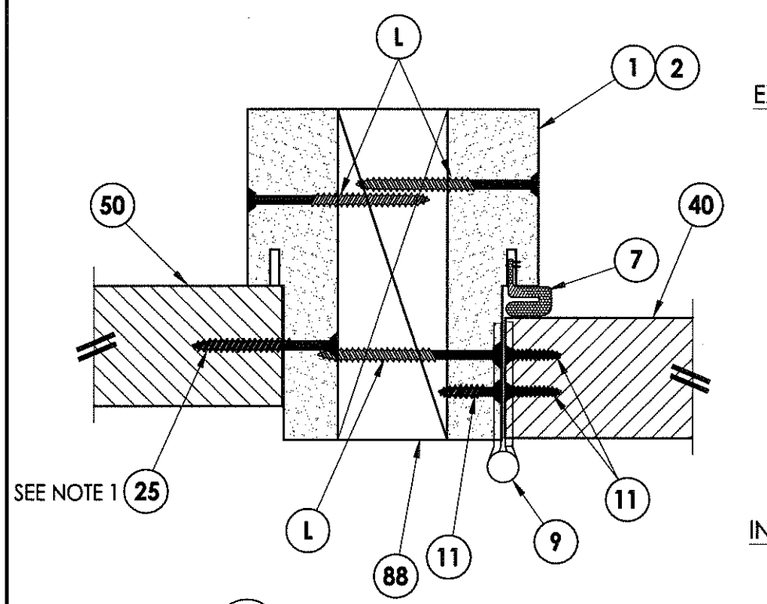

2/5 HORIZONTAL CROSS SECTION

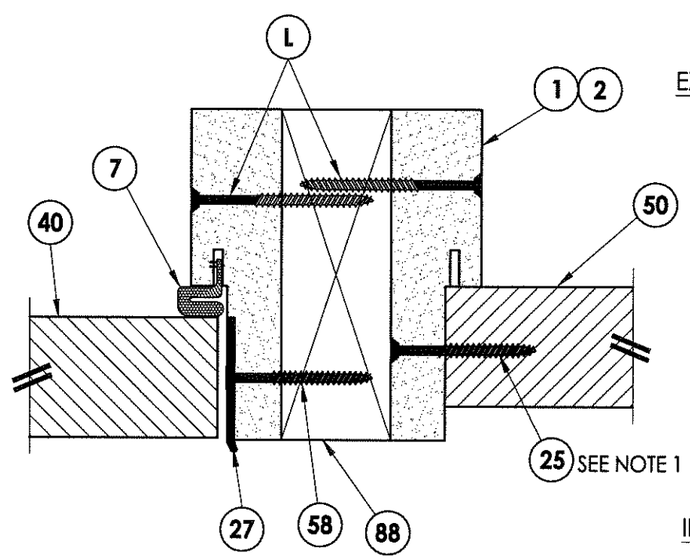

3/5 HORIZONTAL CROSS SECTION

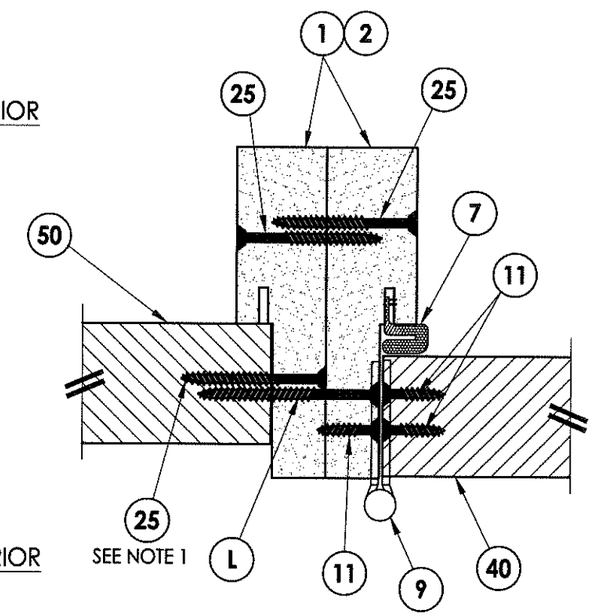

5/5 HORIZONTAL CROSS SECTION

STATE OF TEXAS
LYNDON F. SCHMIDT
104123
LICENSED
PROFESSIONAL ENGINEER

Documents Prepared By: Lyndon F. Schmidt, P.E.
TEXAS P.E. #104123

RW BUILDING CONSULTANTS, INC.
P.O. Box 230 Valrico FL. 33595
Phone No.: 813.659.9197

TEXAS BOARD OF PROFESSIONAL ENGINEERS
CERTIFICATE OF REGISTRATION # F-11852

PRODUCT: FIBERGLASS DOOR

PART OR ASSEMBLY: HORIZONTAL CROSS SECTIONS

NO.	DATE	REVISIONS	BY

DATE: 6/13/13
SCALE: N.T.S.
DWG. BY: JK
CHK. BY: LFS
DRAWING NO.: TX-4377
SHEET 5 OF 9

© 2013 R.W. BUILDING CONSULTANTS INC.

R:\A - Projects\Project Folders\Proj 1701 - 1800\PF 1718\D. RWBC Drawings\ODL Plastpro\TX-4376-77.dwg, 5.2

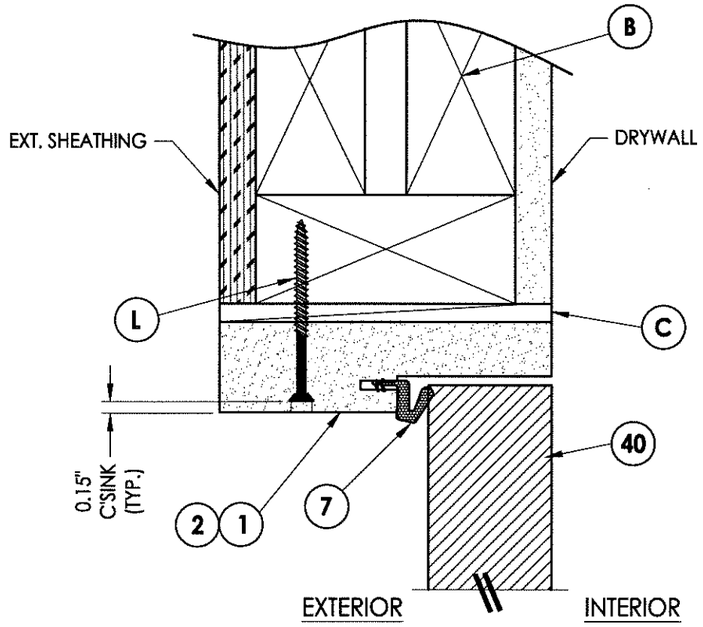

1/6 VERTICAL CROSS SECTION

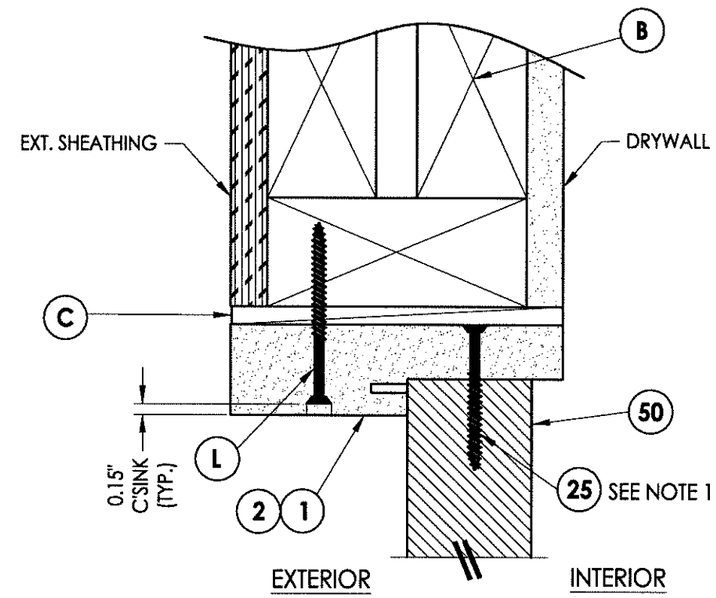

3/6 VERTICAL CROSS SECTION

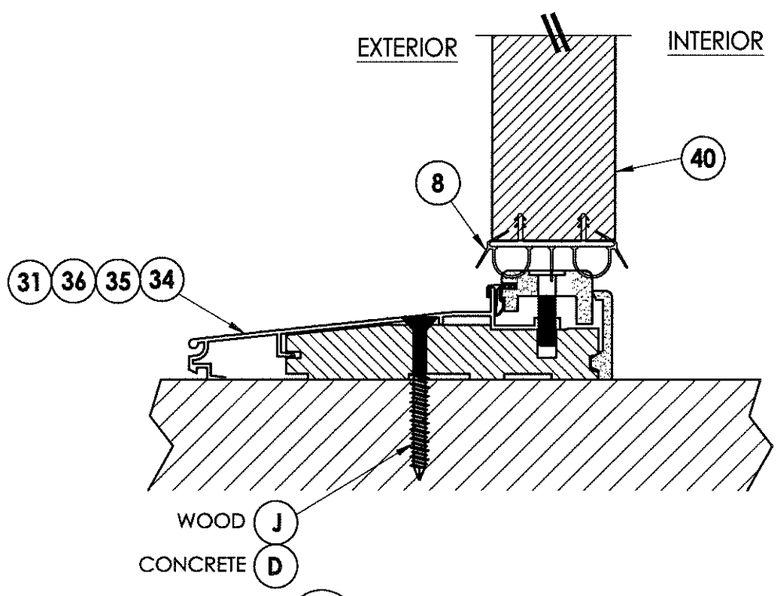

2/6 VERTICAL CROSS SECTION

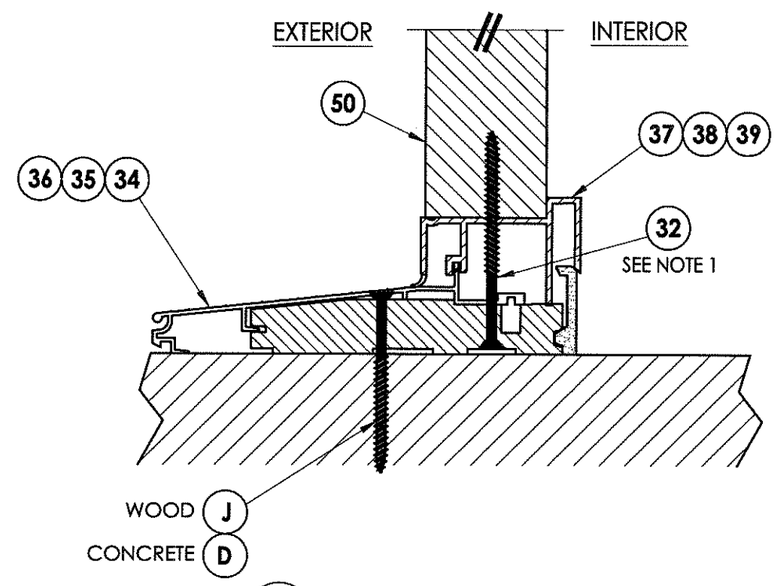

4/6 VERTICAL CROSS SECTION

NOTE:
1. Sidelite panel screws located 6" from each end (2 Total).

STATE OF TEXAS
LYNDON F. SCHMIDT
164123
LICENSED
PROFESSIONAL ENGINEER
7-10-14

Documents Prepared By: Lyndon F. Schmidt, P.E.
TEXAS P.E. #104123

RW BUILDING CONSULTANTS, INC.
P.O. Box 230 Valrico FL. 33595
Phone No.: 813.659.9197

TEXAS BOARD OF PROFESSIONAL ENGINEERS
CERTIFICATE OF REGISTRATION # F-11852

PRODUCT: FIBERGLASS DOOR

PART OR ASSEMBLY: VERTICAL CROSS SECTIONS

NO.	DATE	BY

REVISIONS

DATE: 6/13/13
SCALE: N.T.S.
DWG. BY: JK
CHK. BY: LFS
DRAWING NO.: TX-4377
SHEET 6 OF 9

© 2013 R.W. BUILDING CONSULTANTS INC.

R:\A - Projects\Project Folders\Proj 1701 - 1800\PF 1718\D. RWBC Drawings\ODL Plastpro\TX-4376-77.dwg, 6.2

2X FRAMING TO BE DESIGNED BY THE ENGINEER OR ARCHITECT OF RECORD BASED ON WIND LOADS AND THE CLADDING BEING USED (TYP).

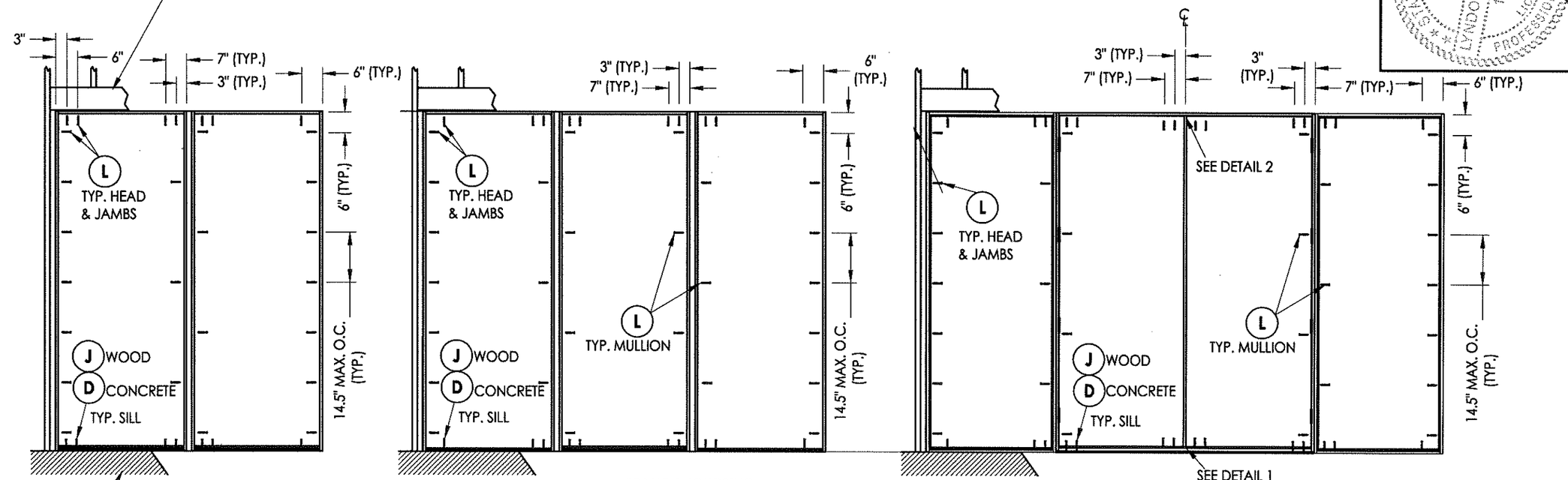

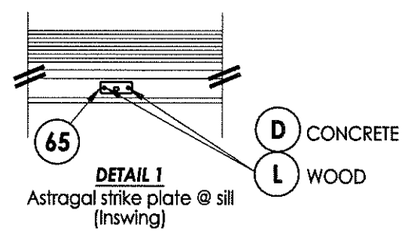

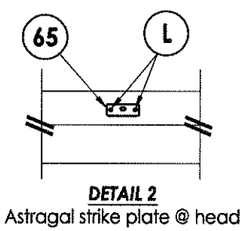

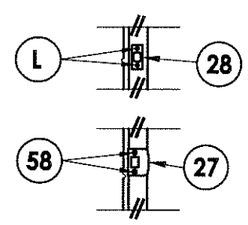

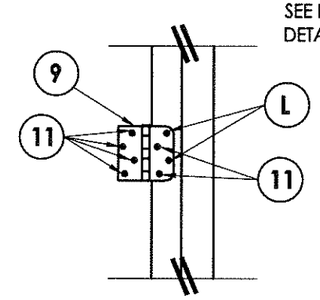

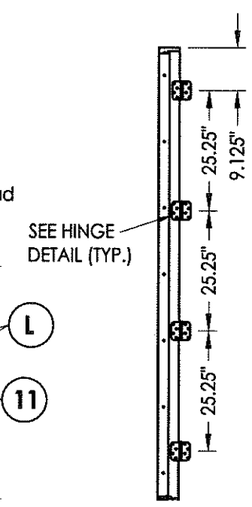

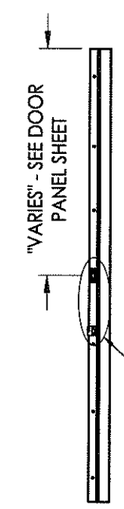

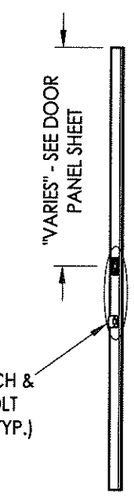

CONCRETE ANCHOR NOTES:

1. *Concrete anchor locations at the corners may be adjusted to maintain the min. edge distance to mortar joints.*
2. *Concrete anchor locations noted as "MAX. ON CENTER" must be adjusted to maintain the min. edge distance to mortar joints, additional concrete anchors may be required to ensure the "MAX. ON CENTER" dimension are not exceeded.*
3. *Concrete anchor table:*

ANCHOR TYPE	ANCHOR SIZE	MIN. EMBEDMENT	MIN. CLEARANCE TO MASONRY EDGE	MIN. CLEARANCE TO ADJACENT ANCHOR
ITW TAPCON®	1/4"	1-3/4"	1-1/2"	4"
ELCO ULTRACON®	1/4"	1-3/4"	1"	3"

STATE OF TEXAS
LYNDON F. SCHMIDT
104123
LICENSED PROFESSIONAL ENGINEER

Documents Prepared By: Lyndon F. Schmidt, P.E.
TEXAS P.E. #104123
RW BUILDING CONSULTANTS, INC.
P.O. Box 230 Valrico FL. 33595
Phone No.: 813.859.9197
TEXAS BOARD OF PROFESSIONAL ENGINEERS CERTIFICATE OF REGISTRATION # F-11852

PRODUCT: *FIBERGLASS DOOR*

PART OR ASSEMBLY: *FRAME ANCHORING*

REVISIONS

NO.	DATE	BY

DATE: 6/13/13
SCALE: N.T.S.
DWG. BY: JK
CHK. BY: LFS
DRAWING NO.: TX-4377
SHEET 7 OF 9

© 2013 R.W. BUILDING CONSULTANTS INC.

R:\A - Projects\Project Folders\Proj 1701 - 1800\PF 1718\D. RWBC Drawings\ODL Plastpro\TX-4376-77.dwg, 7.2

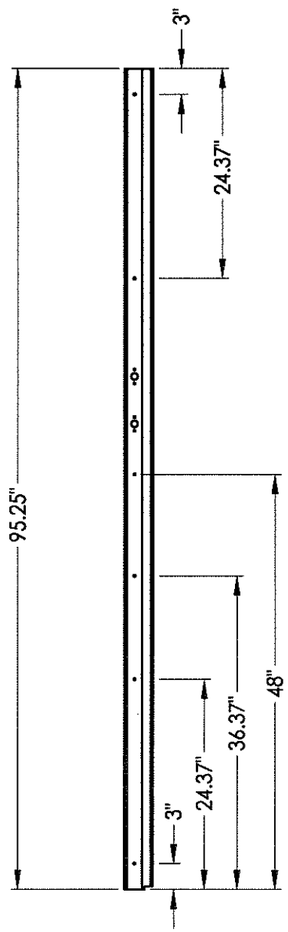

ASTRAGAL SCREW LOCATIONS

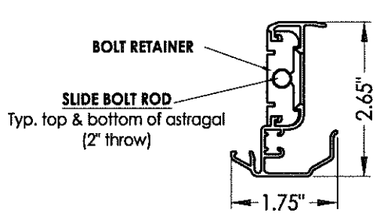

60 **ALUMINUM ASTRAGAL**
Endura Products

8'0 ALUMINUM ASTRAGAL ASSEMBLY
Endura Products

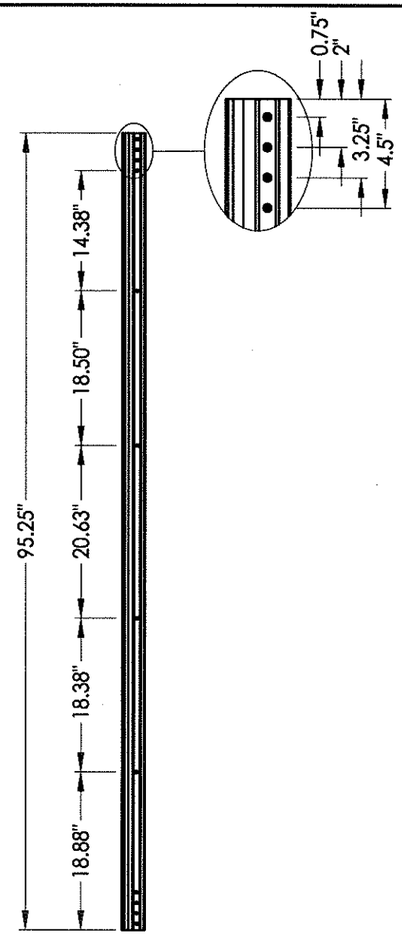

ASTRAGAL SCREW LOCATIONS

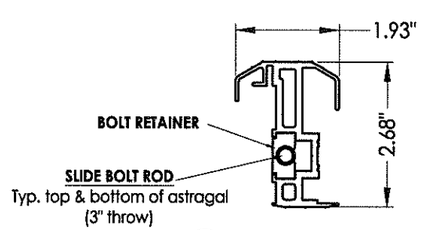

61 **ALUMINUM ASTRAGAL**
Therma-Tru

8'0 ALUMINUM ASTRAGAL ASSEMBLY
Therma-Tru

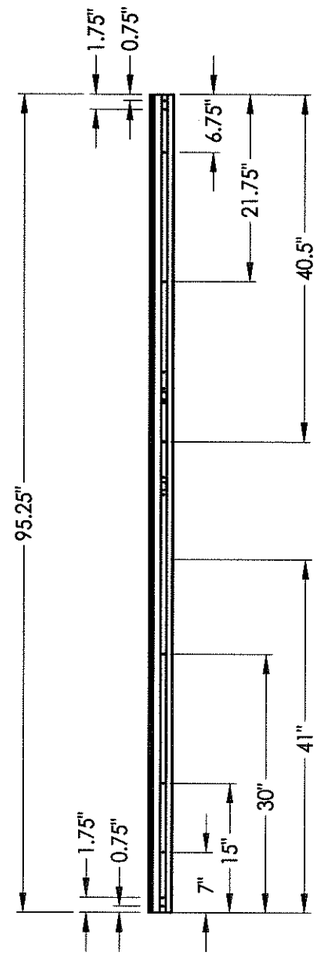

ASTRAGAL SCREW LOCATIONS

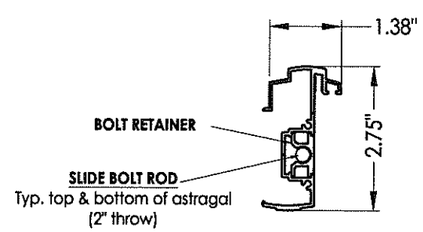

62 **ASTRAGAL**
Columbia

8'0 ALUMINUM ASTRAGAL ASSEMBLY
Columbia

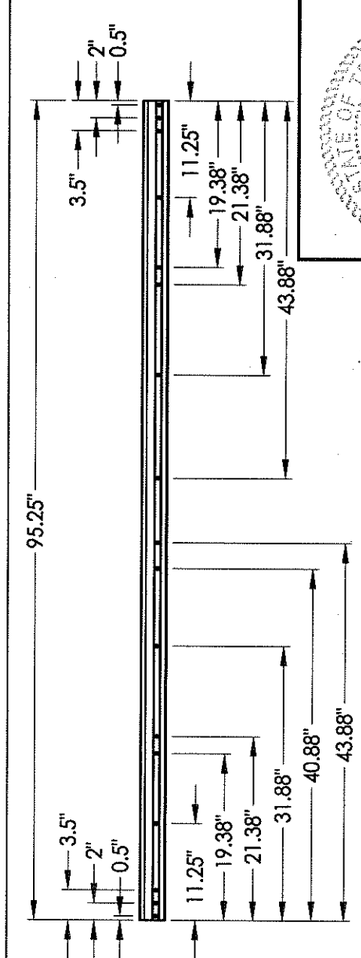

ASTRAGAL SCREW LOCATIONS

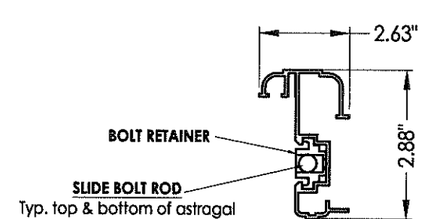

63 **ASTRAGAL**
DLP

8'0 ALUMINUM ASTRAGAL ASSEMBLY
DLP

STATE OF TEXAS
LYNDON F. SCHMIDT
104123
LICENSED
PROFESSIONAL ENGINEER

Documents Prepared By: Lyndon F. Schmidt, P.E.
TEXAS P.E. #104123

RW BUILDING CONSULTANTS, INC.
P.O. Box 230 Valrico FL. 33595
Phone No.: 813.659.9197

TEXAS BOARD OF PROFESSIONAL ENGINEERS
CERTIFICATE OF REGISTRATION # F-11852

PRODUCT: *FIBERGLASS DOOR*

PART OR ASSEMBLY: *ASTRAGAL DETAILS*

NO.	DATE	BY

REVISIONS

DATE: 6/13/13
SCALE: N.T.S.
DWG. BY: JK
CHK. BY: LFS
DRAWING NO.: TX-4377
SHEET 8 OF 9

© 2013 R.W. BUILDING CONSULTANTS INC.

R:\A - Projects\Project Folders\Proj 1701 - 1800\PF 1718\D. RWBC Drawings\ODL Plastpro\TX-4376-77.dwg, 8.2

BILL OF MATERIALS

ITEM #	DESCRIPTION	MATERIAL
B	2X FRAMING (G >= 0.42)	WOOD
C	1/4" MAX. SHIM SPACE	-
D	1/4" PFH ITW CONCRETE SCREW (1-3/4" MIN. EMB.)	STEEL
J	#10 X 3" PFH WOOD SCREW (1-1/2" MIN. EMB.)	STEEL
L	#10 X 2-1/2" PFH WOOD SCREW (1.15" MIN. EMB.)	STEEL
1	HEAD & JAMB	COMP
2	HEAD & JAMB	WOOD
7	WEATHERSTRIP	FOAM
8	DOOR BOTTOM SWEEP	VINYL
9	4" X 4" HINGE	STEEL
11	#9 X 3/4" PFH WOOD SCREW	STEEL
24	#10 X 1-1/2" PFH WOOD SCREW	STEEL
25	#10 X 2" PFH WOOD SCREW	STEEL
27	LATCH STRIKE PLATE	STEEL
28	DEADBOLT STRIKE PLATE	STEEL
31	ADA THRESHOLD	ALUM
34	INSWING THRESHOLD	ALUM/COMP
35	INSWING THRESHOLD	ALUM/COMP
36	INSWING THRESHOLD	ALUM/COMP
37	INSWING SIDELITE SEAT	PVC
38	INSWING SIDELITE SEAT	PVC
39	INSWING SIDELITE SEAT	PVC
40	DOOR PANEL - SEE DOOR PANEL DETAIL SHEET FOR DETAILS	-
50	SIDELITE PANEL - SEE SIDELITE PANEL DETAIL SHEET FOR DETAILS	-
57	#8 X 2" PFH SMS	STEEL
58	#8 X 2-1/2" PFH WOOD SCREW	STEEL
60	ASTRAGAL (ENDURA)	ALUM
61	ASTRAGAL (THERMA-TRU)	ALUM
62	ASTRAGAL (COLUMBIA)	ALUM
64	ASTRAGAL (DLP)	ALUM
65	ASTRAGAL STRIKE PLATE	STEEL

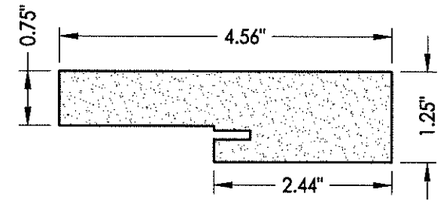

1 **HEAD & JAMB**
Composite

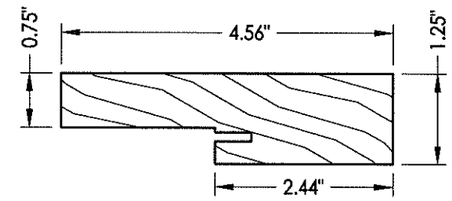

2 **HEAD & JAMB**
Finger joint pine

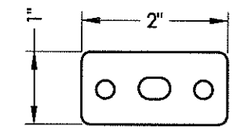

65 **HEAD & SILL STRIKE PLATE**

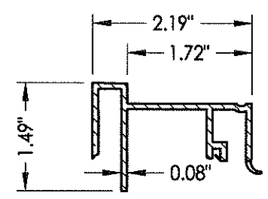

37 **INSWING SIDELITE SEAT**
Therma-Tru

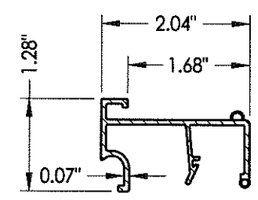

38 **INSWING SIDELITE SEAT**
Endura 60 SERIES

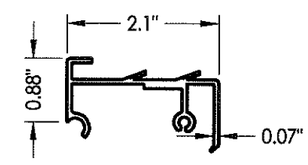

39 **INSWING SIDELITE SEAT**
Columbia

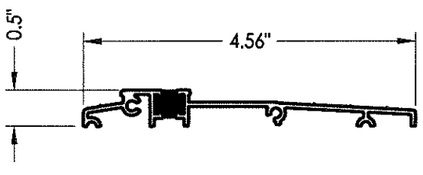

31 **ADA THRESHOLD**
Columbia

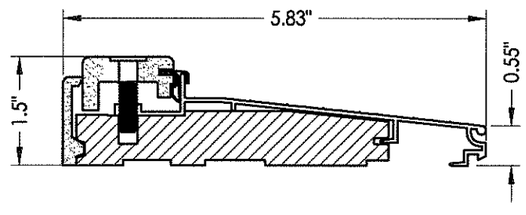

34 **INSWING THRESHOLD**
Therma-Tru

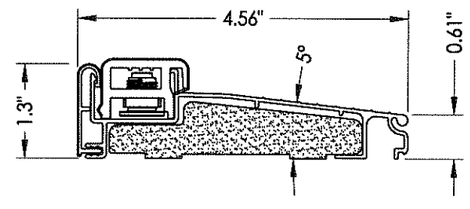

35 **INSWING THRESHOLD**
Endura ZAIL 4565
with Composite Substrate

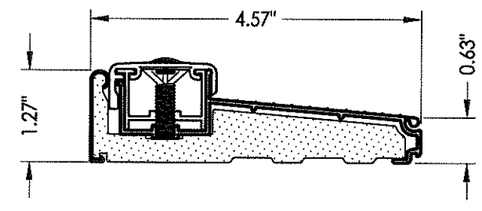

36 **INSWING THRESHOLD**
Columbia 900 Series

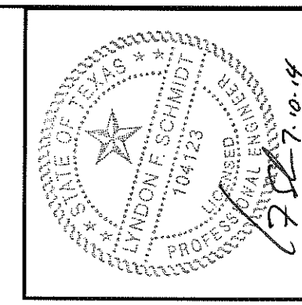

7-10-14

Documents Prepared By: Lyndon F. Schmidt, P.E.
TEXAS P.E. #104123

RW BUILDING CONSULTANTS, INC.
P.O. Box 230 Valrico FL. 33595
Phone No.: 813.659.9197

TEXAS BOARD OF PROFESSIONAL ENGINEERS
CERTIFICATE OF REGISTRATION # F-11852

PRODUCT: FIBERGLASS DOOR

PART OR ASSEMBLY: BILL OF MATERIALS & COMPONENTS

NO.	DATE	BY

REVISIONS

DATE: 6/13/13
SCALE: N.T.S.
DWG. BY: JK
CHK. BY: LFS
DRAWING NO.: TX-4377
SHEET 9 OF 9

© 2013 R.W. BUILDING CONSULTANTS INC.

R:\A - Projects\Project Folders\Proj 1701 - 1800\PF 1718\D. RWBC Drawings\ODL Plastpro\TX-4376-77.dwg, 9.2