plastpro

5200 W. CENTURY BLVD.
LOS ANGELES, CA 90045

OPAQUE FIBERGLASS SINGLE DOOR w/ TRANSOM w/ or w/o SIDELITES

INSWING / OUTSWING "NON- IMPACT"

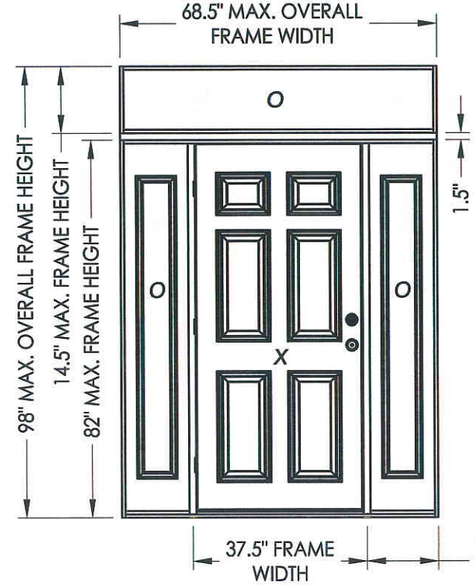

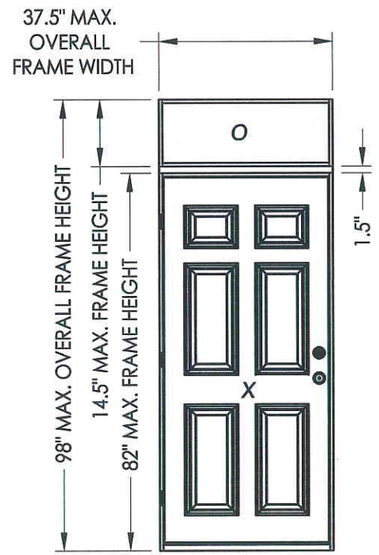

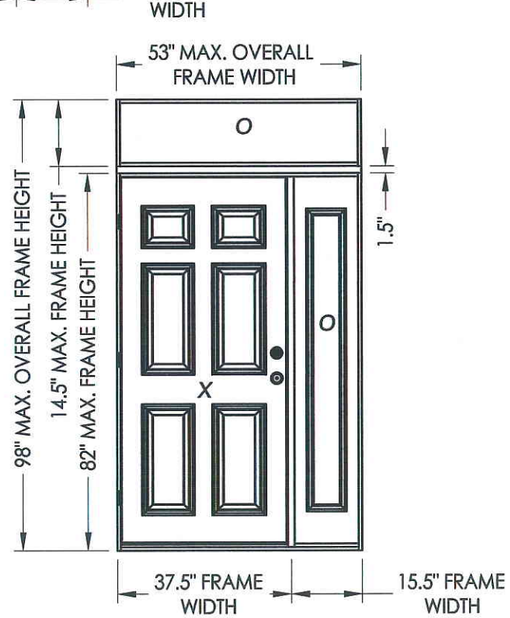

EVALUATED FOR USE IN THE STATE OF TEXAS

The Plastpro Fiberglass Door described herein complies with the 2006 International Residential Code (IRC), Sections R301 & R613 and the 2006 International Building Code (IBC), Sections 1405.12, 1609, 1714.5, 2403 and 2404 (including Texas revisions) subject to the following conditions:

1. Anchors shall be as listed and spaced as shown in the details. Anchor embedment to base material shall be beyond wall dressing or stucco.
2. When used in areas requiring wind-borne debris protection this product is required to be protected with an impact resistant covering that complies with Section R301.2.1.2 of the IRC and Section 1609.1.2 of the IBC.
3. Allowable design pressure requirements must be equal to or less than the design pressure rating shown in the design pressure chart, sheet 1 of this drawing.
4. Conditions not covered by this drawing are subject to further engineering analysis.

SUPPORTING DOCUMENTS & EVIDENCE

1. Testing per AAMA/WDMA/CSA 101/I.S.2/A440-05:
   Testing Evaluation Laboratories, Inc. test report(s) #: TEL 01390253 and TEL 01390254.
2. Calculations (Anchoring and Glass load resistance report ASTM E1300-04) prepared by Lyndon F. Schmidt, P.E.
3. Certificate of Participation issued by the National Accreditation and Management Institute, Inc., certifying that Plastpro is manufacturing products within a Quality Assurance program.

TABLE OF CONTENTS

SHEET#	DESCRIPTION
1	Typical elevations, design pressures & general notes
2	Door panel details
3	Sidelite panel details
4	Transom panel details
5	Elevations
6	Vertical cross sections
7	Horizontal cross sections
8	Buck and frame anchoring
9	Buck and frame anchoring
10	Bill of materials and components

CONFIGURATION	MAX. FRAME DIMENSION	MAX. SIDELITE D.L.O. DIMENSION	MAX. TRANSOM D.L.O. DIMENSION	DESIGN PRESSURE (PSF) INSWING		DESIGN PRESSURE (PSF) OUTSWING	
				POSITIVE	NEGATIVE	POSITIVE	NEGATIVE
O/X	37.5" x 98.0"	6.0" X 63.0"	36.0" X 13.0"	+35.0	-45.0	+35.0	-35.0
O/OX	53.0" x 98.0"	6.0" X 63.0"	51.5" X 13.0"	+35.0	-45.0	+35.0	-35.0
O/OXO	68.5" x 98.0"	6.0" X 63.0"	67.0" X 13.0"	+35.0	-45.0	+35.0	-35.0

STATE OF TEXAS
LYNDON F. SCHMIDT
104123
LICENSED PROFESSIONAL ENGINEER
7.1.10

Documents Prepared By: Lyndon F. Schmidt, P.E.
TEXAS P.E. #104123

RW BUILDING CONSULTANTS, INC.
P.O. Box 230 Valrico FL. 33595
Phone No.: 813.659.9197

TEXAS BOARD OF PROFESSIONAL ENGINEERS
CERTIFICATE OF REGISTRATION # F-11852

PRODUCT: PLASTPRO FIBERGLASS DOOR

PART OR ASSEMBLY: TYPICAL ELEVATION, DESIGN PRESSURES & GENERAL NOTES

NO.	DATE	REVISIONS	BY

DATE: 6/23/10
SCALE: N.T.S.
DWG. BY: JK
CHK. BY: LFS
DRAWING NO.: TX-4102
SHEET 1 OF 11

© 2010 R.W. BUILDING CONSULTANTS INC.

R:\A - Projects\Project Folders\proj 1501 - 1600\PF 1553\D. RWBC Drawings\TX-4102.dwg, TX-4102

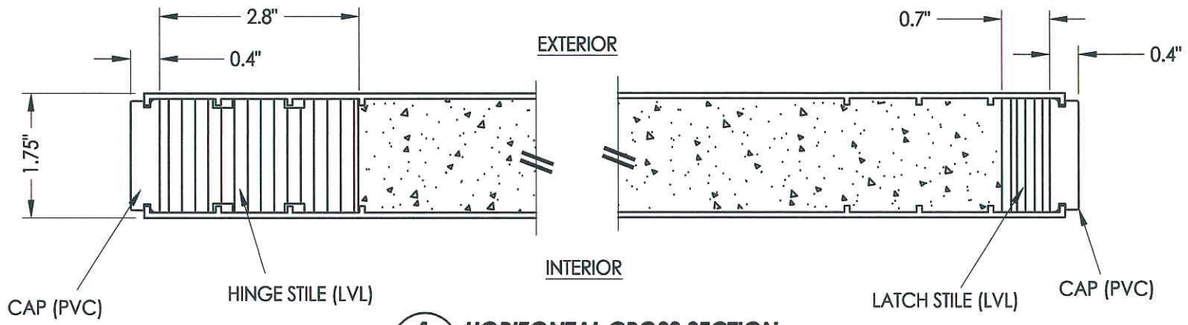

1/2 **HORIZONTAL CROSS SECTION**

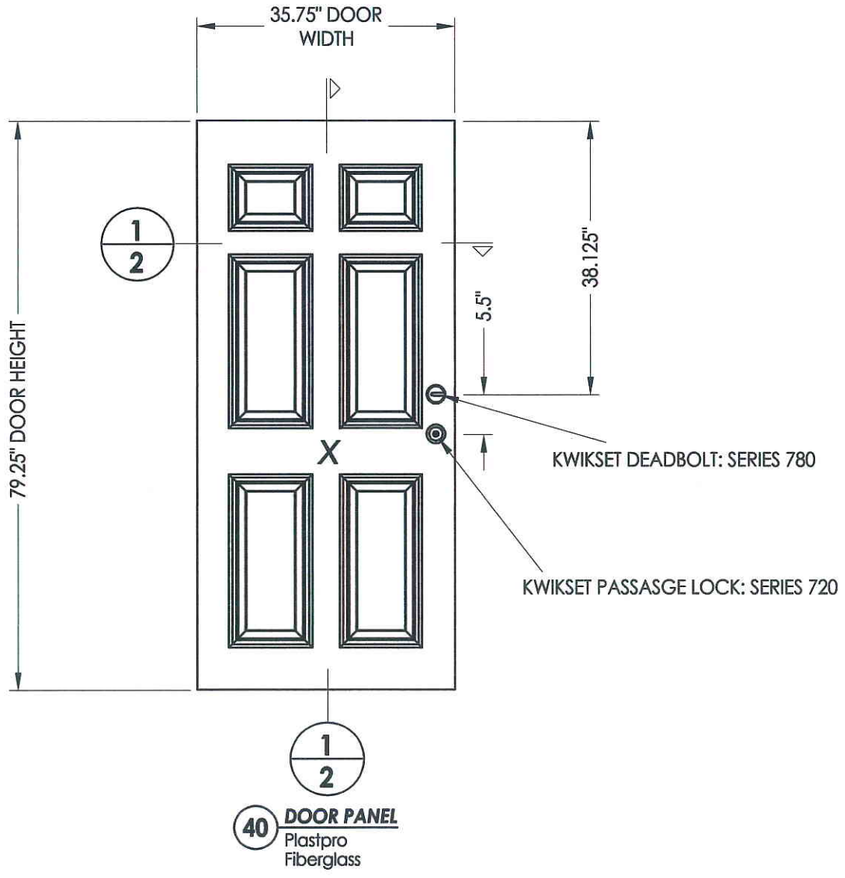

40 **DOOR PANEL**
Plastpro
Fiberglass

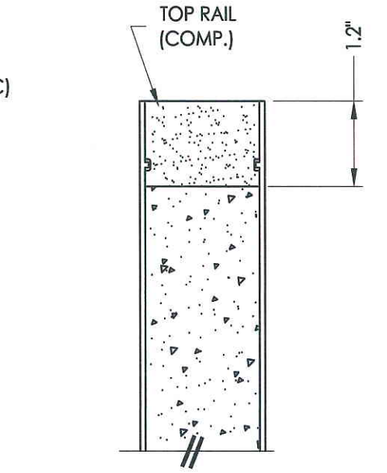

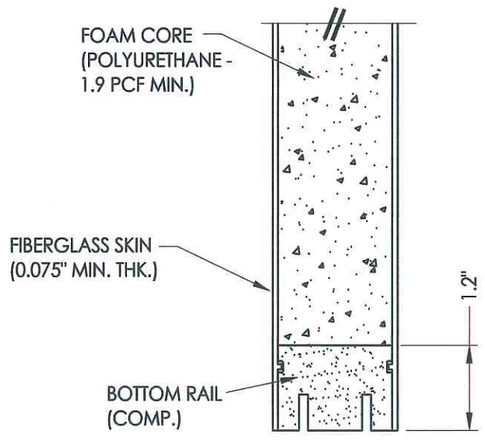

2/2 **VERTICAL CROSS SECTION**

Documents Prepared By: Lyndon F. Schmidt, P.E.
TEXAS P.E. #104123

R|W BUILDING CONSULTANTS, INC.
P.O. Box 230 Valrico FL. 33595
Phone No.: 813.659.9197

TEXAS BOARD OF PROFESSIONAL ENGINEERS
CERTIFICATE OF REGISTRATION # F-11852

PRODUCT: PLASTPRO FIBERGLASS DOOR

PART OR ASSEMBLY: DOOR PANEL DETAILS

NO.	DATE	BY
	REVISIONS	

DATE: 6/23/10
SCALE: N.T.S.
DWG. BY: JK
CHK. BY: LFS
DRAWING NO.: TX-4102
SHEET 2 OF 11

© 2010 R.W. BUILDING CONSULTANTS INC.

R:\A - Projects\Project Folders\proj 1501 - 1600\PF 1553\D. RWBC Drawings\TX-4102.dwg, 2.1

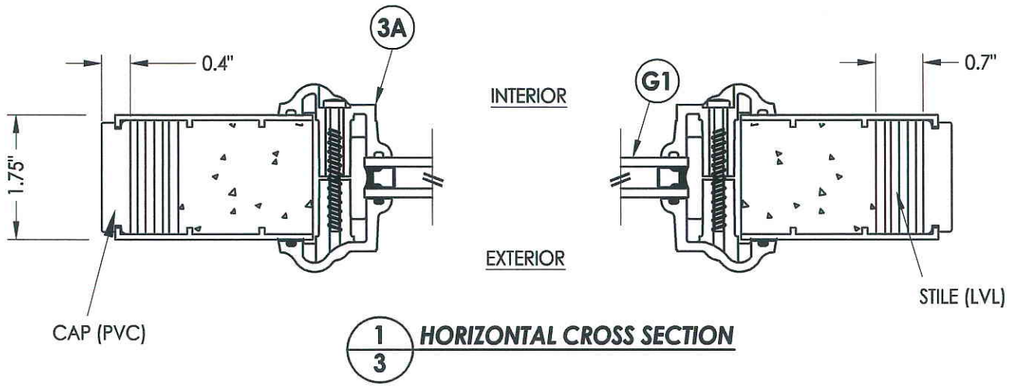

1/3 **HORIZONTAL CROSS SECTION**

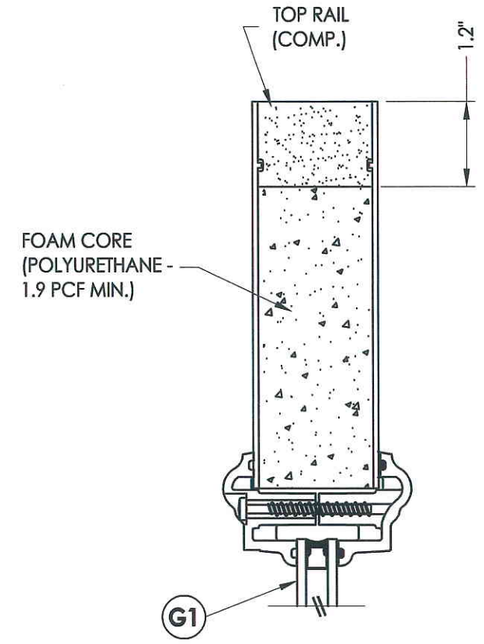

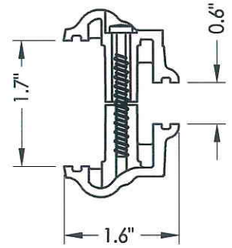

3A **ODL LITE FRAME**
HP Polypropylene

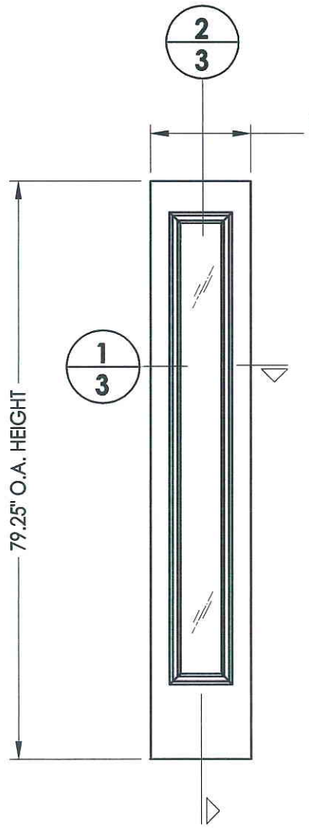

50 **SIDELITE PANEL**
Plastpro
Fiberglass

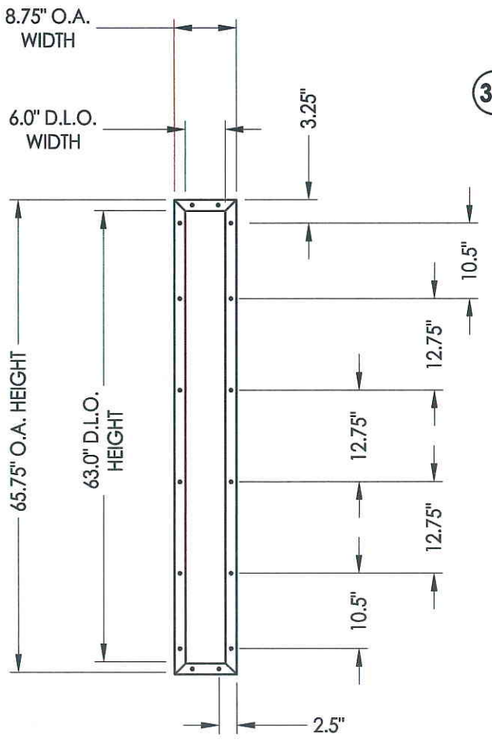

ODL LITE FRAME

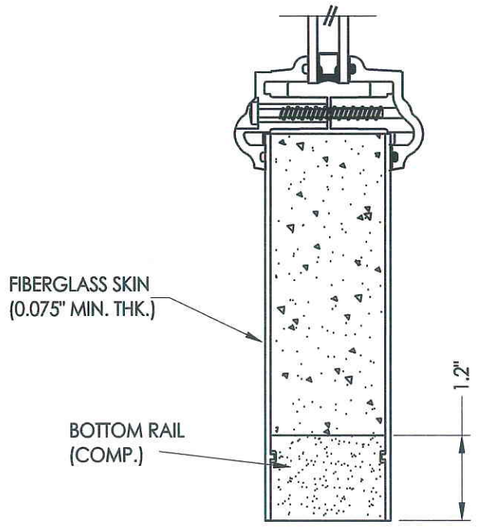

2/3 **VERTICAL CROSS SECTION**

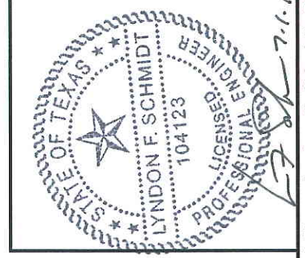

Documents Prepared By: Lyndon F. Schmidt, P.E.
TEXAS P.E. #104123

RW BUILDING CONSULTANTS, INC.
P.O. Box 230 Valrico FL. 33595
Phone No.: 813.659.9197

TEXAS BOARD OF PROFESSIONAL ENGINEERS
CERTIFICATE OF REGISTRATION # F-11852

PRODUCT: PLASTPRO FIBERGLASS DOOR

PART OR ASSEMBLY: SIDELITE PANEL DETAILS

NO.	DATE	BY	REVISIONS

DATE: 6/23/10
SCALE: N.T.S.
DWG. BY: JK
CHK. BY: LFS
DRAWING NO.: TX-4102
SHEET 3 OF 11

© 2010 R.W. BUILDING CONSULTANTS INC.

R:\A - Projects\Project Folders\proj 1501 - 1600\PF 1553\D. RWBC Drawings\TX-4102.dwg, 3.1

NOTE:
1. Spacing for item #16: 1" from ends and 8" o.c. thereafter.

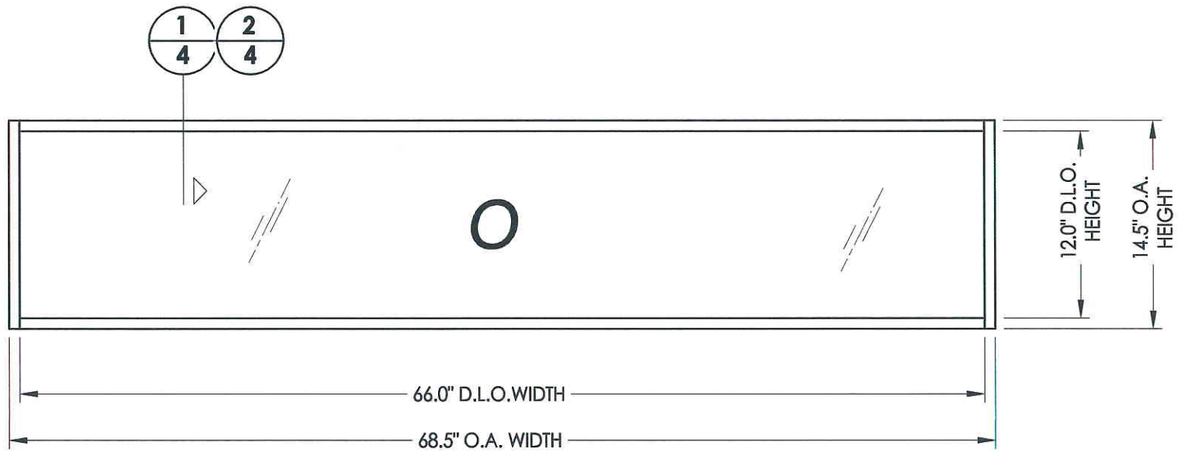

TRANSOM FRAME

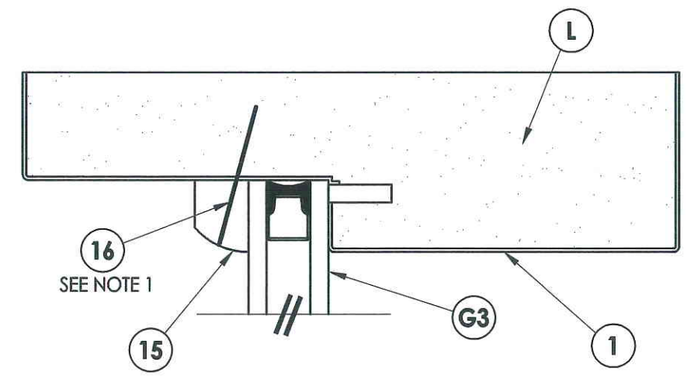

INTERIOR EXTERIOR

1/4 VERTICAL CROSS SECTION

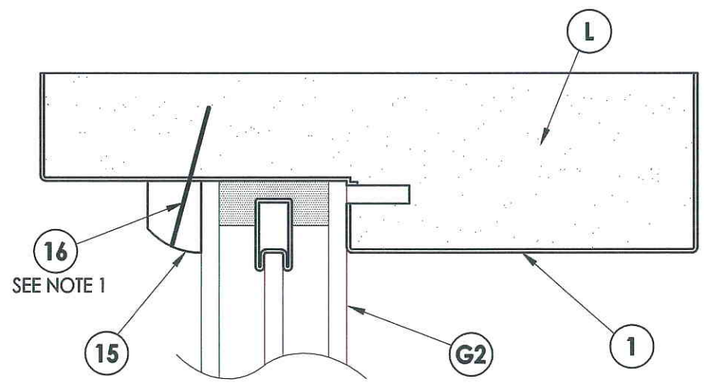

INTERIOR EXTERIOR

2/4 VERTICAL CROSS SECTION

STATE OF TEXAS
LYNDON F. SCHMIDT
104123
LICENSED PROFESSIONAL ENGINEER

Documents Prepared By: Lyndon F. Schmidt, P.E.
TEXAS P.E. #104123

RW BUILDING CONSULTANTS, INC.
P.O. Box 230 Valrico FL 33595
Phone No.: 813.659.9197

TEXAS BOARD OF PROFESSIONAL ENGINEERS
CERTIFICATE OF REGISTRATION # F-11852

PRODUCT: *PLASTPRO FIBERGLASS DOOR*

PART OR ASSEMBLY: *TRANSOM PANEL DETAILS*

NO.	DATE	BY	REVISIONS

DATE: 6/23/10
SCALE: N.T.S.
DWG. BY: JK
CHK. BY: LFS
DRAWING NO.: TX-4102
SHEET 4 OF 11

© 2010 R.W. BUILDING CONSULTANTS INC.

R:\A - Projects\Project Folders\proj 1501 - 1600\PF 1553\D. RWBC Drawings\TX-4102.dwg, 4.1

ELEVATION (O/X)

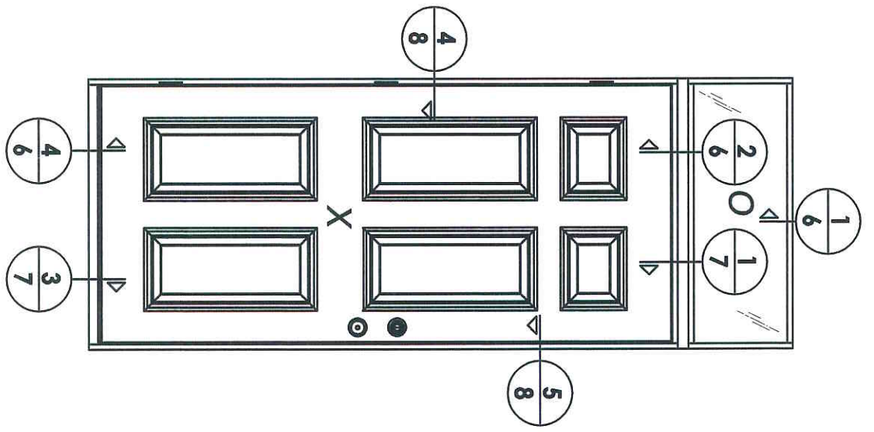

ELEVATION (O/XO - O/OX)

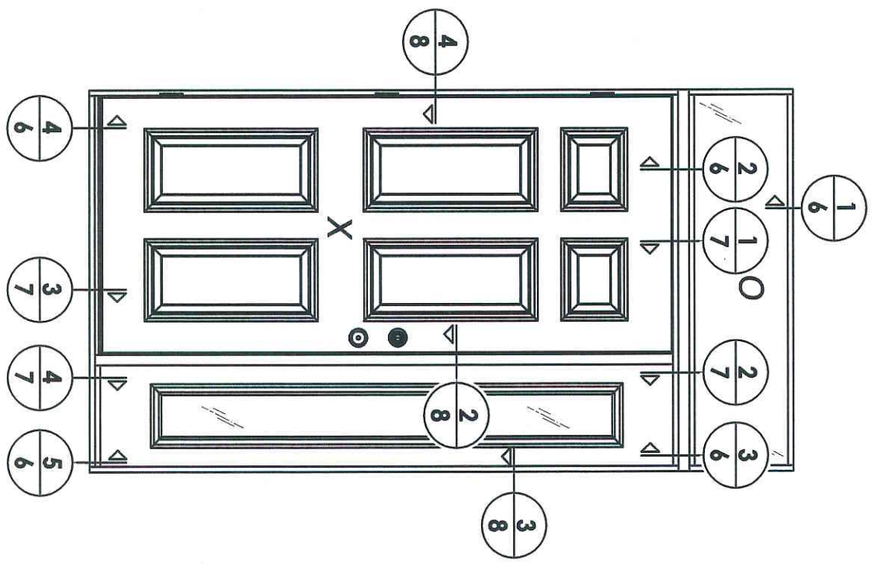

ELEVATION (O/OXO)

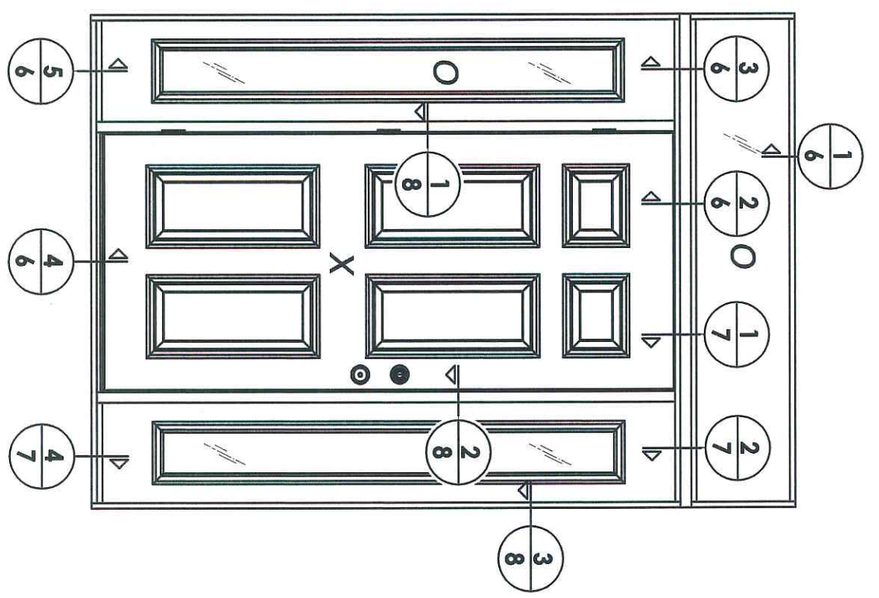

STATE OF TEXAS
LYNDON F. SCHMIDT
104123
LICENSED PROFESSIONAL ENGINEER
7.1.10

NO.	DATE	REVISIONS	BY

PRODUCT:
PLASTPRO FIBERGLASS DOOR

PART OR ASSEMBLY:
ELEVATIONS

Documents Prepared By: Lyndon F. Schmidt, P.E.
TEXAS P.E. #104123

RW BUILDING CONSULTANTS, INC.
P.O. Box 230 Valrico FL. 33595
Phone No.: 813.659.9197

TEXAS BOARD OF PROFESSIONAL ENGINEERS
CERTIFICATE OF REGISTRATION # F-11852

DATE: 6/23/10
SCALE: N.T.S.
DWG. BY: JK
CHK. BY: LFS
DRAWING NO.: TX-4102
SHEET 5 OF 11

© 2010 R.W. Building Consultants Inc.

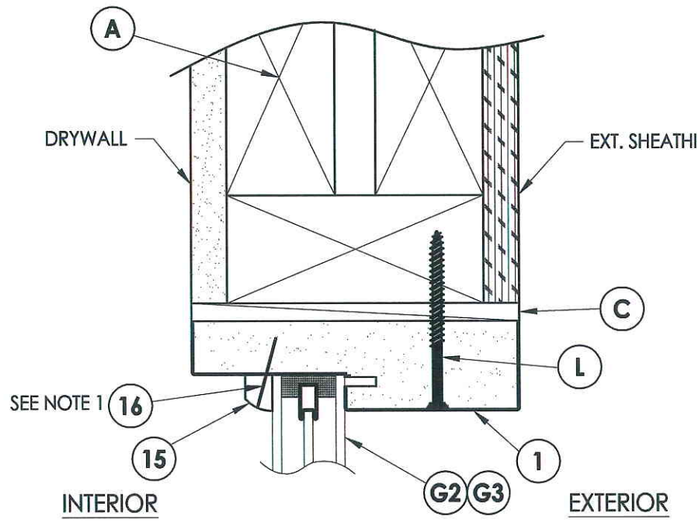

1/6 **VERTICAL CROSS SECTION**
Inswing shown

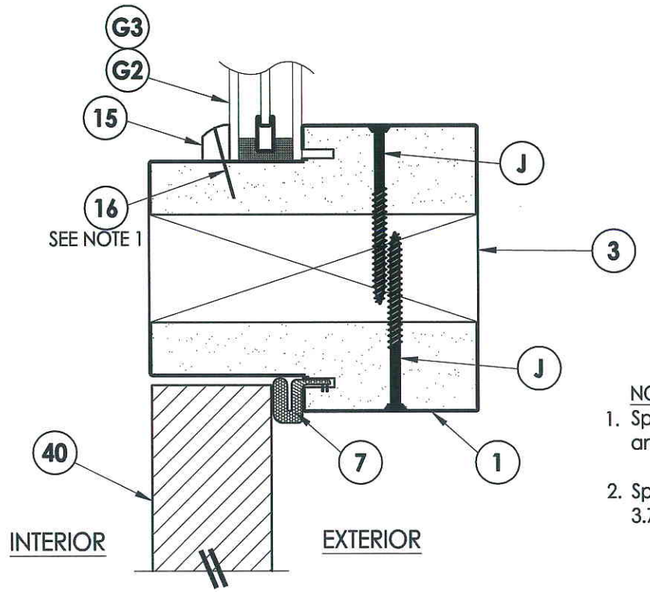

2/6 **VERTICAL CROSS SECTION**
Inswing shown

NOTE:
1. Spacing for item #16: 1" from ends and 8" o.c. thereafter.
2. Spacing for item J: 3.75" from each end.

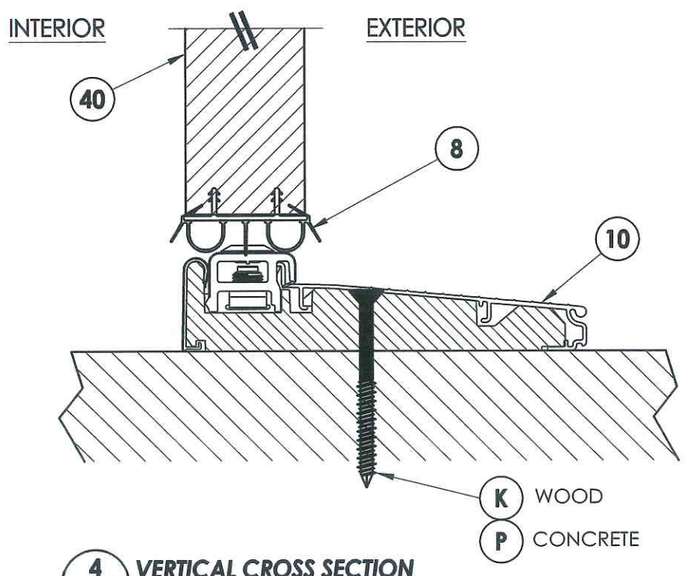

4/6 **VERTICAL CROSS SECTION**
Inswing shown

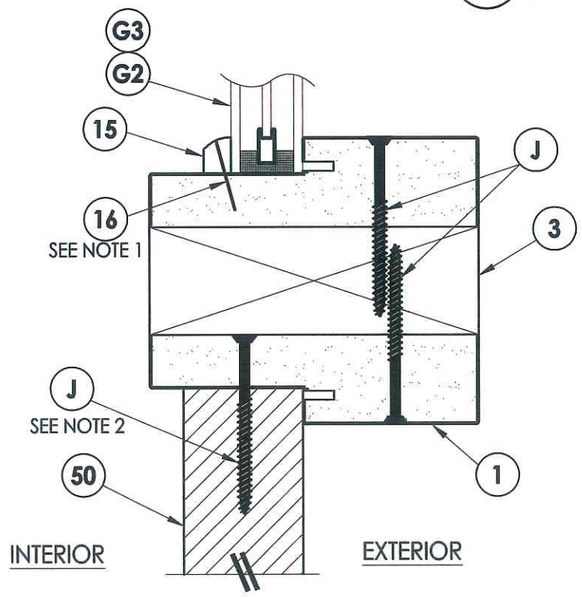

3/6 **VERTICAL CROSS SECTION**
Inswing shown

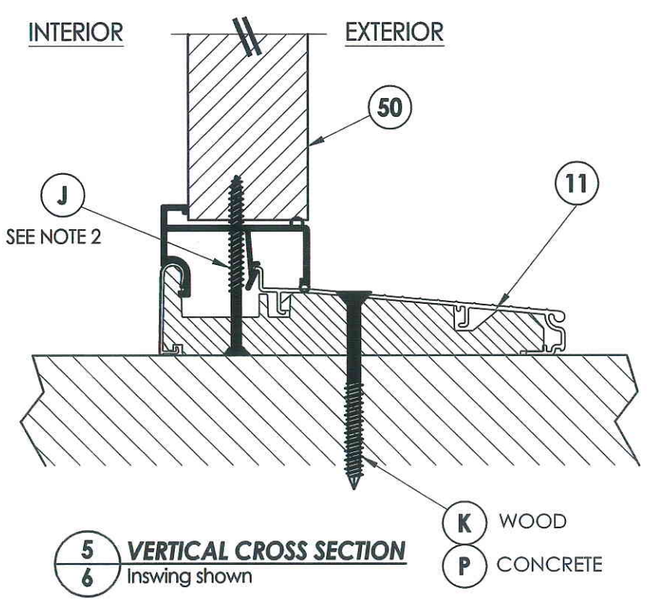

5/6 **VERTICAL CROSS SECTION**
Inswing shown

STATE OF TEXAS
LYNDON F. SCHMIDT
104123
LICENSED PROFESSIONAL ENGINEER
2.1.10

Documents Prepared By: Lyndon F. Schmidt, P.E.
TEXAS P.E. #104123

RW BUILDING CONSULTANTS, INC.
P.O. Box 230 Valrico FL. 33595
Phone No.: 813.659.9197

TEXAS BOARD OF PROFESSIONAL ENGINEERS
CERTIFICATE OF REGISTRATION # F-11852

PRODUCT: *PLASTPRO FIBERGLASS DOOR*

PART OR ASSEMBLY: *VERTICAL CROSS SECTIONS*

NO.	DATE	BY
REVISIONS		

DATE: 6/23/10
SCALE: N.T.S.
DWG. BY: JK
CHK. BY: LFS
DRAWING NO.: TX-4102
SHEET 6 OF 11

© 2010 R.W. BUILDING CONSULTANTS INC.

R:\A - Projects\Project Folders\proj 1501 - 1600\PF 1553\D. RWBC Drawings\TX-4102.dwg, 6.1

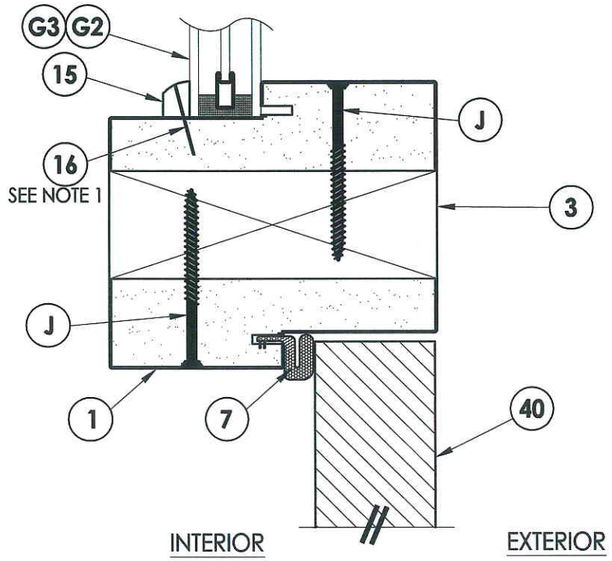

1/7 **VERTICAL CROSS SECTION**
Outswing shown

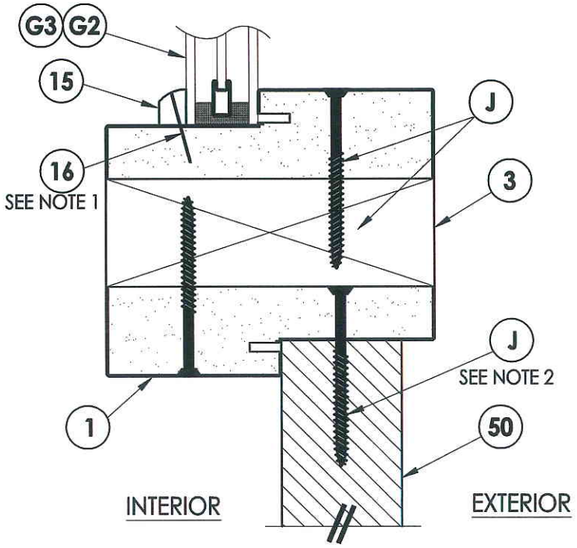

2/7 **VERTICAL CROSS SECTION**
Outswing shown

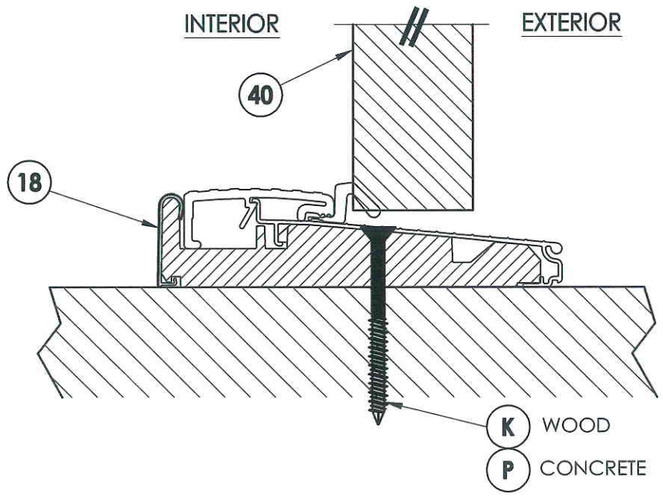

3/7 **VERTICAL CROSS SECTION**
Outswing shown

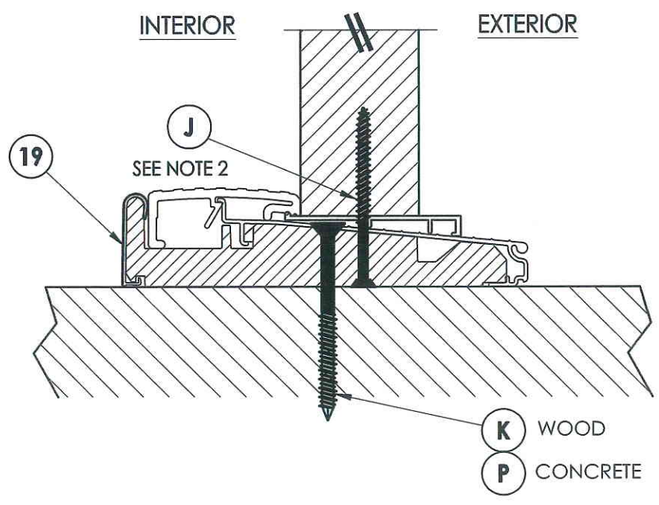

4/7 **VERTICAL CROSS SECTION**
Outswing shown

NOTE:
1. Spacing for item #16: 1" from ends and 8" o.c. thereafter.
2. Spacing for item J: 3.75" from each end.

Documents Prepared By: Lyndon F. Schmidt, P.E.
TEXAS P.E. #104123

RW BUILDING CONSULTANTS, INC.
P.O. Box 230 Valrico FL. 33595
Phone No.: 813.659.9197

TEXAS BOARD OF PROFESSIONAL ENGINEERS
CERTIFICATE OF REGISTRATION # F-11852

STATE OF TEXAS · LYNDON F. SCHMIDT · 104123 · LICENSED PROFESSIONAL ENGINEER

PRODUCT: PLASTPRO FIBERGLASS DOOR

PART OR ASSEMBLY: VERTICAL CROSS SECTIONS

NO.	DATE	BY	REVISIONS

DATE: 6/23/10
SCALE: N.T.S.
DWG. BY: JK
CHK. BY: LFS
DRAWING NO.: TX-4102
SHEET 7 OF 11

© 2010 R.W. BUILDING CONSULTANTS INC.

R:\A - Projects\Project Folders\proj 1501 - 1600\PF 1553\D. RWBC Drawings\TX-4102.dwg, 7.1

NOTE:
1. Spacing for item J: 6" from ends and 4 more equally spaced along sidelite (6 total).

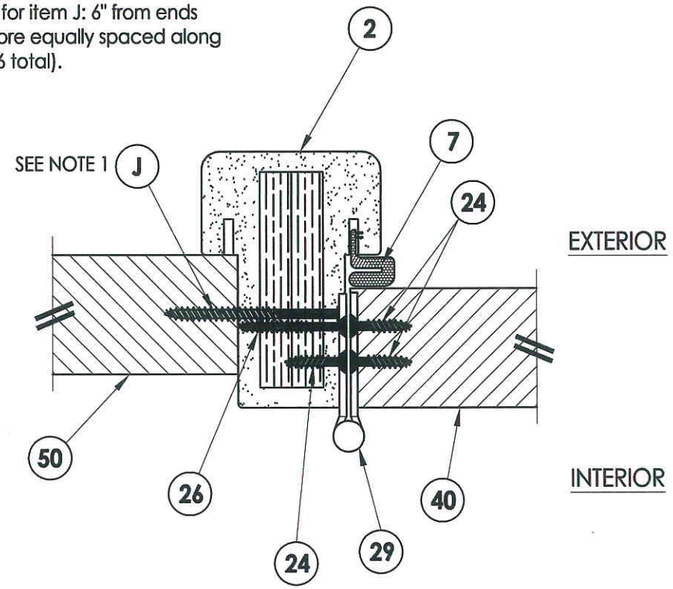

1/8 **HORIZONTAL CROSS SECTION**
Inswing shown - outswing also approved

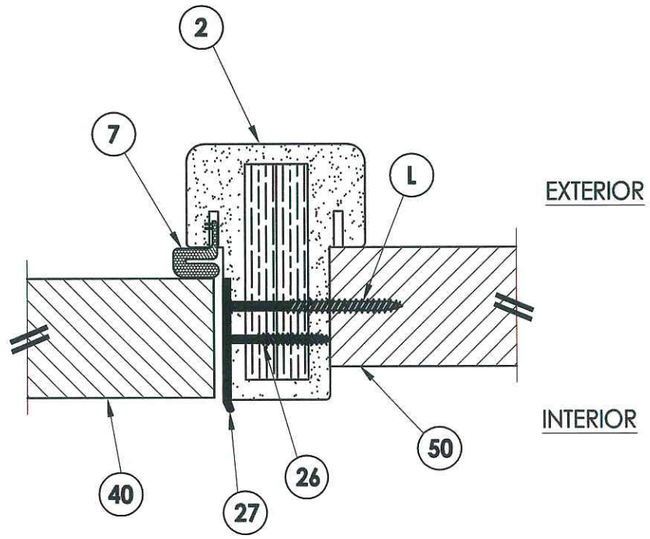

2/8 **HORIZONTAL CROSS SECTION**
Inswing shown - outswing also approved

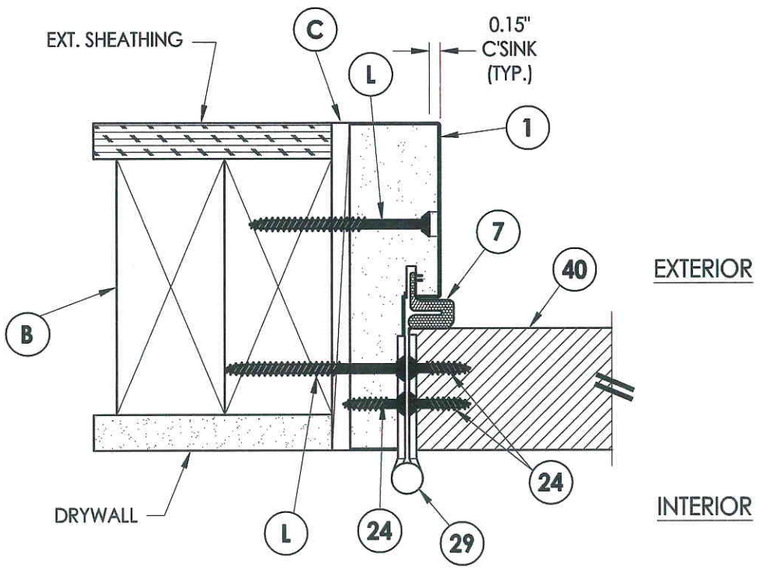

4/8 **HORIZONTAL CROSS SECTION**
Inswing shown - outswing also approved

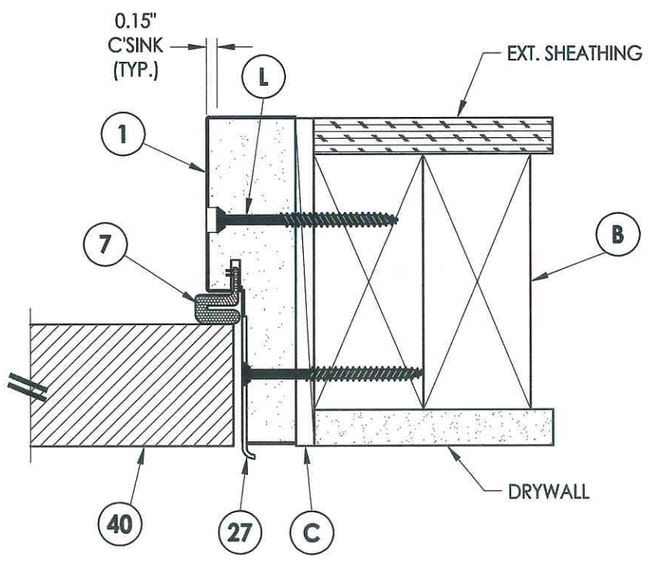

5/8 **HORIZONTAL CROSS SECTION**
Inswing shown - outswing also approved

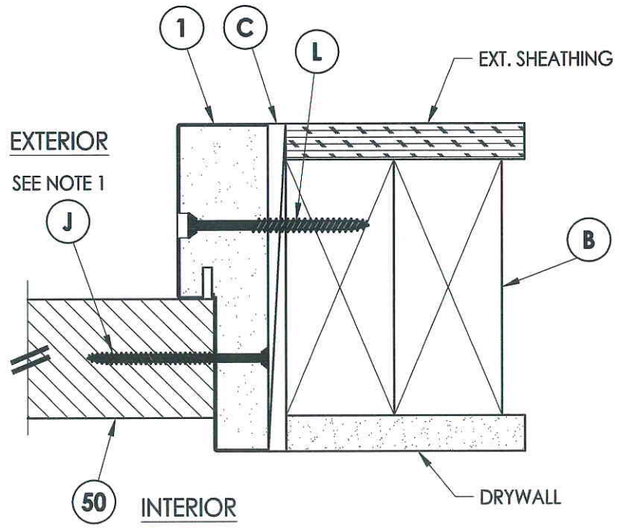

6/8 **HORIZONTAL CROSS SECTION**
Inswing shown - outswing also approved

Documents Prepared By: Lyndon F. Schmidt, P.E.
TEXAS P.E. #104123
RW BUILDING CONSULTANTS, INC.
P.O. Box 230 Valrico FL. 33595
Phone No.: 813.659.9197
TEXAS BOARD OF PROFESSIONAL ENGINEERS
CERTIFICATE OF REGISTRATION # F-11852

STATE OF TEXAS · LYNDON F. SCHMIDT · 104123 · LICENSED PROFESSIONAL ENGINEER

PRODUCT: PLASTPRO FIBERGLASS DOOR
PART OR ASSEMBLY: HORIZONTAL CROSS SECTIONS

NO.	DATE	BY
	REVISIONS	

DATE: 6/23/10
SCALE: N.T.S.
DWG. BY: JK
CHK. BY: LFS
DRAWING NO.: TX-4102
SHEET 8 OF 11

© 2010 R.W. BUILDING CONSULTANTS INC.

R:\A - Projects\Project Folders\proj 1501 - 1600\PF 1553\D. RWBC Drawings\TX-4102.dwg, 8.1

2X FRAMING TO BE DESIGNED BY THE ENGINEER OR ARCHITECT OF RECORD BASED ON WIND LOADS AND THE CLADDING BEING USED.

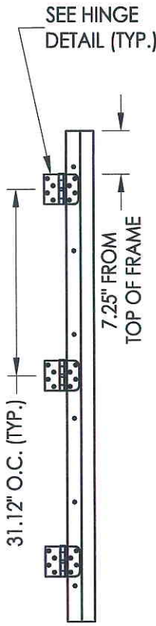

HINGE JAMB

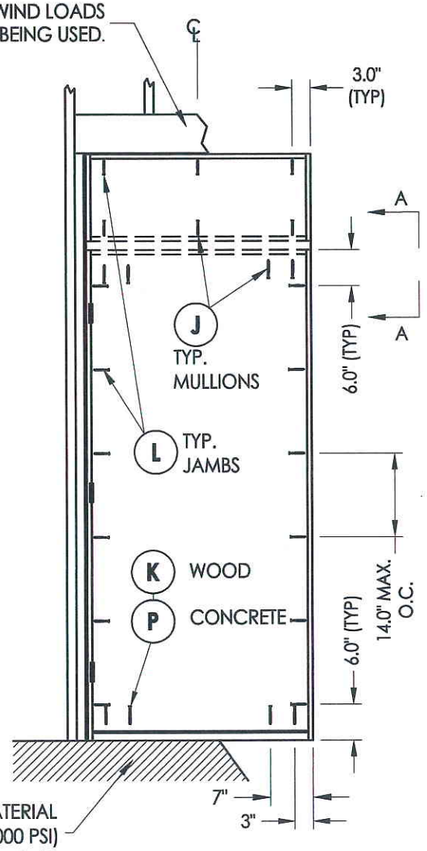

FRAME ANCHORING
O/X

STRIKE JAMB

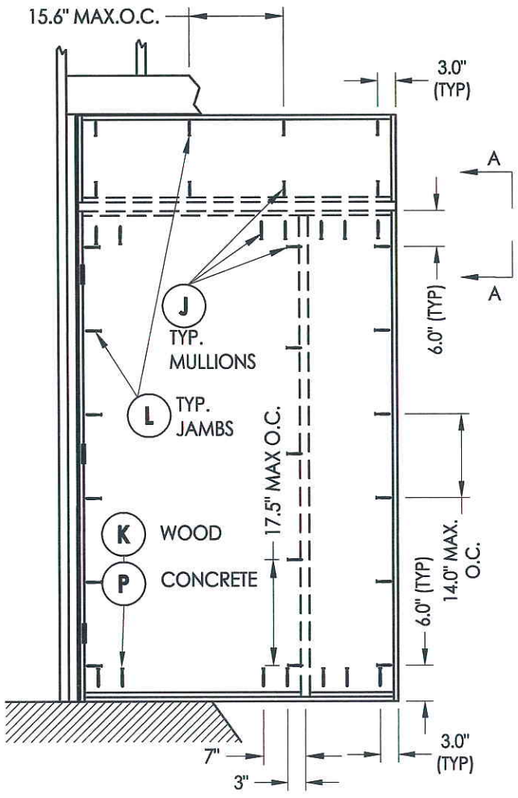

FRAME ANCHORING
O/OX

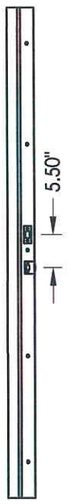

STRIKE JAMB

CONCRETE ANCHOR NOTES:

1. *Substitution of equal concrete anchors from a different supplier may have different edge distance and center distance requirements.*
2. *Concrete anchor locations at the corners may be adjusted to maintain the min. edge distance to mortar joints. Concrete anchor locations noted as "MAX. ON CENTER" must be adjusted to maintain the min. edge distance to mortar joints, additional concrete anchors may be required to ensure the "MAX. ON CENTER" dimension are not exceeded.*
3. *Concrete anchor table:*

ANCHOR TYPE	ANCHOR SIZE	MIN. EMBEDMENT	MIN. CLEARANCE TO MASONRY EDGE	MIN. CLEARANCE TO ADJACENT ANCHOR
ITW	1/4"	1-1/4"	2-1/2"	3"
ELCO	1/4"	1-1/4"	1"	4"

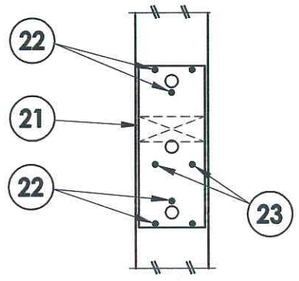

VIEW A-A
Mullion Clip Detail

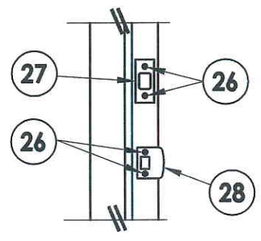

LATCH AND DEADBOLT
Details

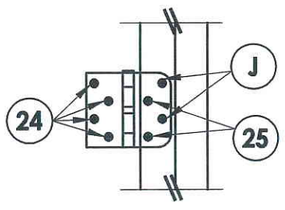

HINGE DETAIL

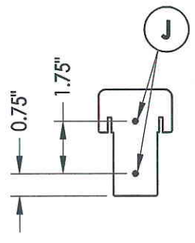

MULLION END DETAIL
@ Head and Sill

STATE OF TEXAS
LYNDON F. SCHMIDT
104123
LICENSED PROFESSIONAL ENGINEER
7.1.10

Documents Prepared By: Lyndon F. Schmidt, P.E.
TEXAS P.E. #104123

RW BUILDING CONSULTANTS, INC.
P.O. Box 230 Valrico FL. 33595
Phone No.: 813.659.9197

TEXAS BOARD OF PROFESSIONAL ENGINEERS
CERTIFICATE OF REGISTRATION # F-11852

PRODUCT: *HURRICANE "T" ASTRAGAL*

PART OR ASSEMBLY: *BUCK & FRAME ANCHORING*

NO.	DATE	BY

REVISIONS

DATE: 6/23/10
SCALE: N.T.S.
DWG. BY: JK
CHK. BY: LFS
DRAWING NO.: TX-4102
SHEET 9 OF 11

© 2010 R.W. BUILDING CONSULTANTS INC.

R:\A - Projects\Project Folders\proj 1501 - 1600\PF 1553\D. RWBC Drawings\TX-4102.dwg, 9.1

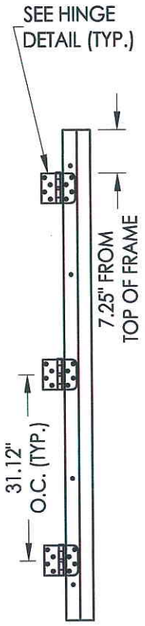

HINGE JAMB

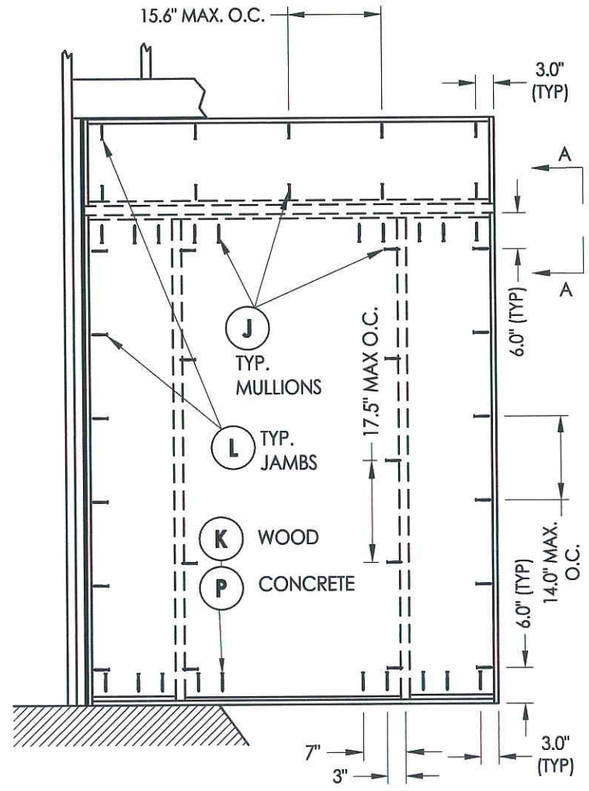

FRAME ANCHORING
O/OXO

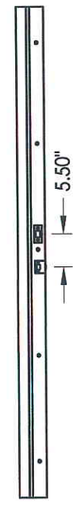

STRIKE JAMB

CONCRETE ANCHOR NOTES:

1. *Substitution of equal concrete anchors from a different supplier may have different edge distance and center distance requirements.*
2. *Concrete anchor locations at the corners may be adjusted to maintain the min. edge distance to mortar joints. Concrete anchor locations noted as "MAX. ON CENTER" must be adjusted to maintain the min. edge distance to mortar joints, additional concrete anchors may be required to ensure the "MAX. ON CENTER" dimension are not exceeded.*
3. *Concrete anchor table:*

ANCHOR TYPE	ANCHOR SIZE	MIN. EMBEDMENT	MIN. CLEARANCE TO MASONRY EDGE	MIN. CLEARANCE TO ADJACENT ANCHOR
ITW	1/4"	1-1/4"	2-1/2"	3"
ELCO	1/4"	1-1/4"	1"	4"

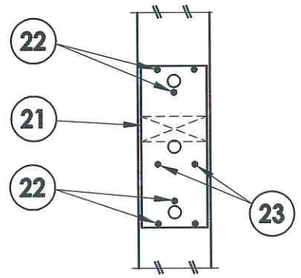

VIEW A-A
Mullion Clip Detail

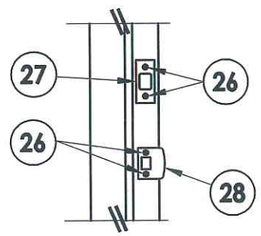

LATCH AND DEADBOLT
Details

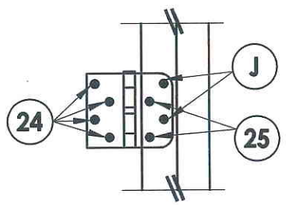

HINGE DETAIL

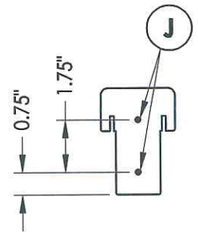

MULLION END DETAIL
@ Head and Sill

Documents Prepared By: Lyndon F. Schmidt, P.E.
TEXAS P.E. #104123

RW BUILDING CONSULTANTS, INC.
P.O. Box 230 Valrico FL. 33595
Phone No.: 813.659.9197

TEXAS BOARD OF PROFESSIONAL ENGINEERS
CERTIFICATE OF REGISTRATION # F-11852

PRODUCT: *HURRICANE "T" ASTRAGAL*

PART OR ASSEMBLY: *BUCK & FRAME ANCHORING*

NO.	DATE	BY
REVISIONS		

DATE: 6/23/10
SCALE: N.T.S.
DWG. BY: JK
CHK. BY: LFS
DRAWING NO.: TX-4102
SHEET 10 OF 11

© 2010 R.W. BUILDING CONSULTANTS INC.

R:\A - Projects\Project Folders\proj 1501 - 1600\PF 1553\D. RWBC Drawings\TX-4102.dwg, 10.1

BILL OF MATERIALS		
ITEM #	DESCRIPTION	MATERIAL
A	2X HEADER FRAMING SG >= 0.42	WOOD
B	2X BUCK SG >= 0.42	WOOD
C	1/4" MAX. SHIM SPACE	-
J	#9 X 2-1/2" DRYWALL SCREW	STEEL
L	#10 X 2-1/2" PFH WOOD SCREW	STEEL
K	#10 X 3" PFH WOOD SCREW	STEEL
P	1/4" PFH ELCO OR ITW CONCRETE SCREW (1-3/4" MIN. EMB.)	STEEL
1	POLY FIBER JAMB	COMP.
2	COMPOSITE MULLION w/ LVL REINFORCEMENT	COMP/LVL
3	2X HORIZONTAL MULLION (SG>= 0.55)	WOOD
4	#7-19 X 1-3/4" PPH SELF DRILLING SMS	STEEL
5	INT. FRAME	PVC
6	EXT. FRAME (PC ABS)	PVC
7	WEATHERSTRIP	FOAM
8	SWEEP	PVC
9	ALUMINUM SPACER	ALUMINUM
10	INSWING THRESHOLD	ALUM/COMP
11	INSWING THRESHOLD W/SIDELITE ADAPTER	ALUM/COMP
12	HOMERUN SEALANT	-
13	READISEAL SEALANT	-
15	1/2" QUARTER ROUND	PVC
16	1" BRAD	STEEL
18	OUTSWING THRESHOLD	ALUM/COMP
19	OUTSWING THRESHOLD W/SIDELITE ADAPTER	ALUM/COMP
24	#9 x 3/4" PFH WOOD SCREW	STEEL
26	#8 x 1-1/2" PFH WOOD SCREW	STEEL
27	LATCH STRIKE PLATE	STEEL
28	DEADBOLT STRIKE PLATE	STEEL
29	4 X4 HINGE	STEEL
40	DOOR PANEL	-
50	SIDELITE PANEL	-

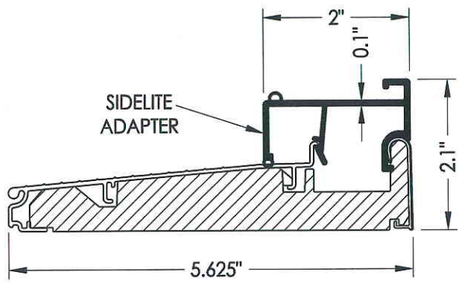

11 INSWING THRESHOLD w/ SIDELITE ADAPTER
By PLASTPRO

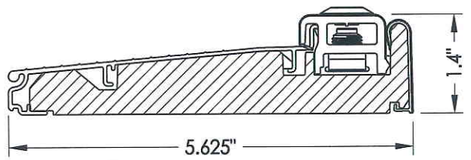

10 INSWING THRESHOLD
By PLASTPRO

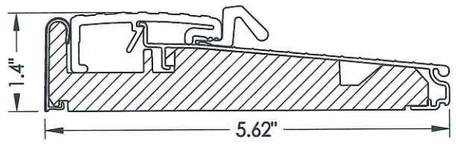

18 OUTSWING THRESHOLD
By Endura

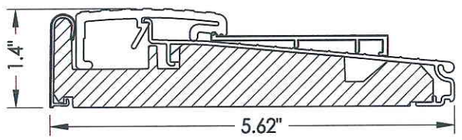

19 OUTSWING THRESHOLD w/ SIDELITE ADAPTER
By Endura

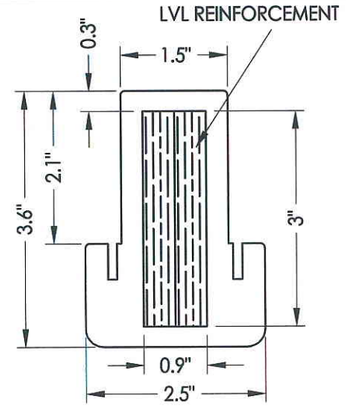

2 COMPOSITE MULLION w/ LVL REINFORCEMENT

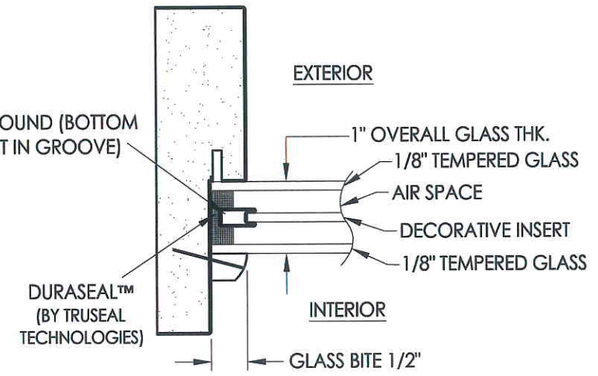

G2 GLAZING DETAIL
Decoseal

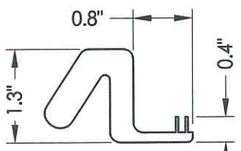

7 WEATHERSTRIP

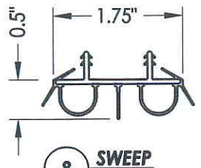

8 SWEEP

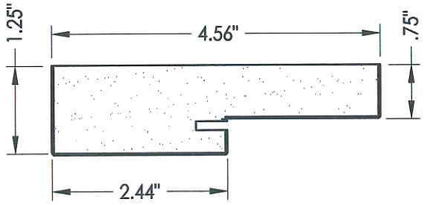

1 POLY FIBER JAMB

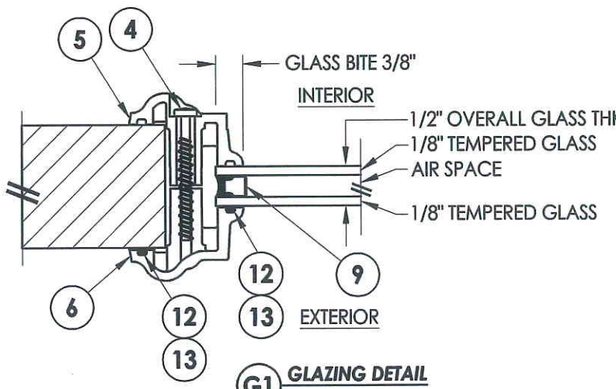

G1 GLAZING DETAIL

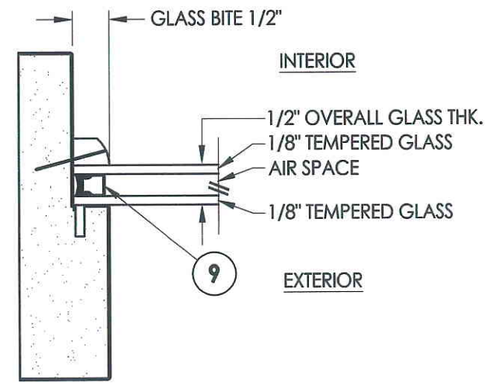

G3 GLAZING DETAIL

STATE OF TEXAS · LYNDON F. SCHMIDT · 104123 · LICENSED PROFESSIONAL ENGINEER

7-1-10

Documents Prepared By: Lyndon F. Schmidt, P.E.
TEXAS P.E. #104123

RW BUILDING CONSULTANTS, INC.
P.O. Box 230 Valrico FL. 33595
Phone No.: 813.659.9197

TEXAS BOARD OF PROFESSIONAL ENGINEERS
CERTIFICATE OF REGISTRATION # F-11852

PRODUCT: PLASTPRO FIBERGLASS DOOR

PART OR ASSEMBLY: BILL OF MATERIALS, COMPONENTS & GLAZING DETAILS

NO.	DATE	BY	REVISIONS

DATE: 6/23/10
SCALE: N.T.S.
DWG. BY: JK
CHK. BY: LFS
DRAWING NO.: TX-4102
SHEET 11 OF 11

© 2010 R.W. BUILDING CONSULTANTS INC.

R:\A - Projects\Project Folders\proj 1501 - 1600\PF 1553\D. RWBC Drawings\TX-4102.dwg, 11.1