Endura PRODUCTS, INC.

8811 West Market Street
Colfax, NC 27235

Glazed Steel Door

"NON-IMPACT"
INSWING / OUTSWING

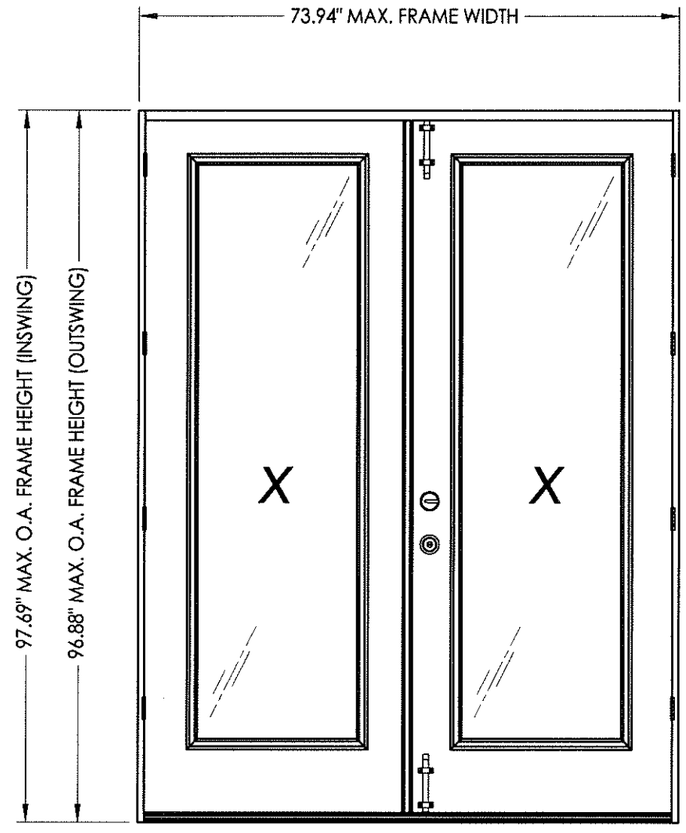

EVALUATED FOR USE IN THE STATE OF TEXAS

The Glazed Steel Door system described herein complies with the 2006 International Residential Code (IRC), Sections R301 & R613 and the 2006 International Building Code (IBC), Sections 1405.12, 1609, 1714.5, 2403 and 2404 (including Texas revisions) subject to the following conditions:

1. Anchors shall be as listed and spaced as shown in the details. Anchor embedment to base material shall be beyond wall dressing or stucco.
2. When used in areas requiring wind-borne debris protection this product is required to be protected with an impact resistant covering that complies with Section R301.2.1.2 of the IRC and Section 1609.1.2 of the IBC.
3. Allowable design pressure requirements must be equal to or less than the design pressure rating shown in the design pressure chart, sheet 1 of this drawing.
4. Conditions not covered by this drawing are subject to further engineering analysis.

CONFIG.	SURFACE BOLTS	MODEL	DESIGN PRESSURE (PSF) ULTIMATE HURRICANE ASTRAGAL		DESIGN PRESSURE (PSF) ULTIMATE MULTI-POINT ASTRAGAL		DESIGN PRESSURE (PSF) ULTIMATE FLIP LEVER ASTRAGAL	
			POSITIVE	NEGATIVE	POSITIVE	NEGATIVE	POSITIVE	NEGATIVE
XX	NO	INSWING	+25.0	-30.0	+40.0	-40.0	+35.0	-40.0
		OUTSWING	+25.0	-25.0	+40.0	-40.0	+35.0	-35.0
	YES	INSWING	+35.0	-35.0	N/A	N/A	N/A	N/A
		OUTSWING	+35.0	-35.0	N/A	N/A	N/A	N/A

TABLE OF CONTENTS

SHEET#	DESCRIPTION
1	Typical elevations, design pressures & general notes
2	Astragal details (Ultimate Flip Lever)
3	Astragal details (Ultimate Multi-point)
4	Astragal details (Ultimate Hurricane)
5	Door panel details (lip lite insert glazing)
6	Horizontal cross sections
7	Vertical cross sections
8	Frame anchoring

STATE OF TEXAS — LYNDON F. SCHMIDT — 104123 — LICENSED PROFESSIONAL ENGINEER
1-13-14

Documents Prepared By: Lyndon F. Schmidt, P.E.
TEXAS P.E. #104123
RW BUILDING CONSULTANTS, INC.
P.O. Box 230 Valrico FL 33595
Phone No.: 813.659.9197
TEXAS BOARD OF PROFESSIONAL ENGINEERS
CERTIFICATE OF REGISTRATION # F-11852

PRODUCT: ENDURA

PART OR ASSEMBLY: TYPICAL ELEVATION, DESIGN PRESSURES & GENERAL NOTES

NO.	DATE	REVISIONS	BY
1	1/09/14	ADDED ARTICULATING SILL	LFS

DATE: 8/20/12
SCALE: N.T.S.
DWG. BY: JK
CHK. BY: LFS
DRAWING NO.: TX-4225
SHEET 1 OF 8

© 2012 R.W. BUILDING CONSULTANTS INC.

R:\A - Projects\Project Folders\Proj 1601 - 1700\PF 1675\D. RWBC Drawings\TX-4224-27.dwg, TX-4225

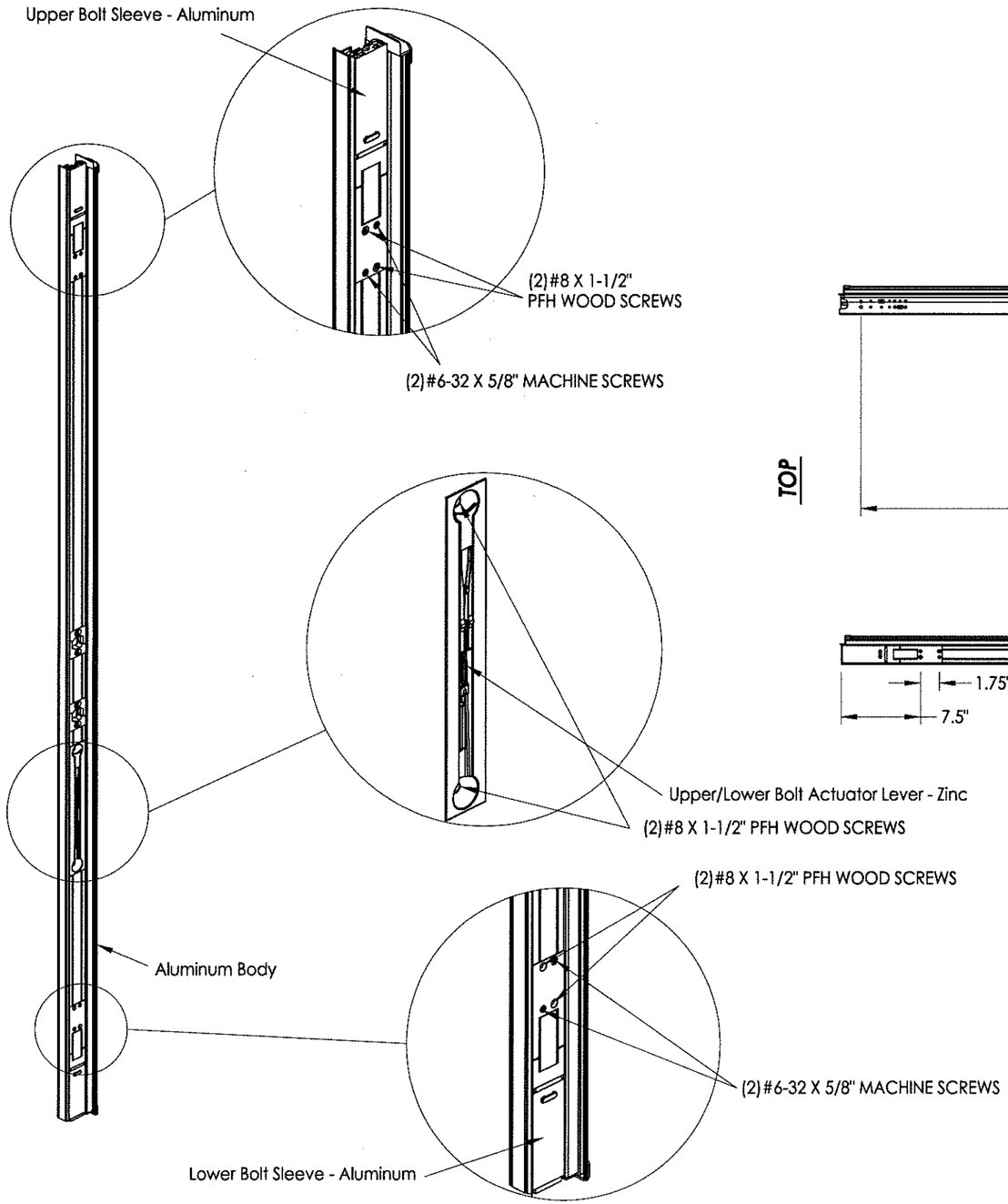

ULTIMATE FLIP LEVER ASTRAGAL

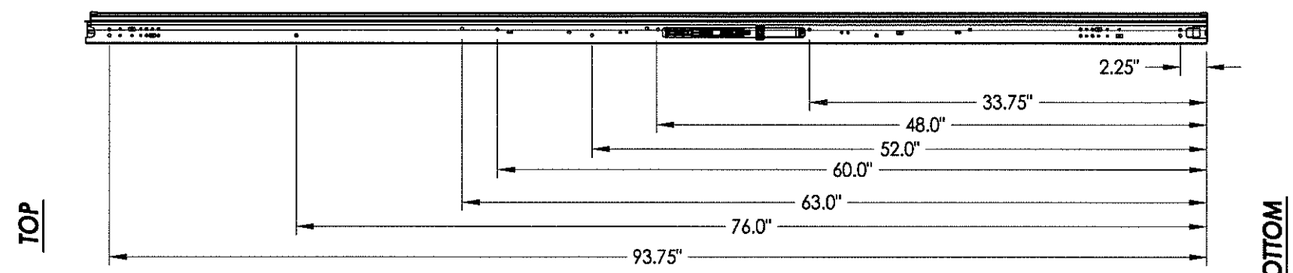

ANCHOR SCREW LOCATIONS

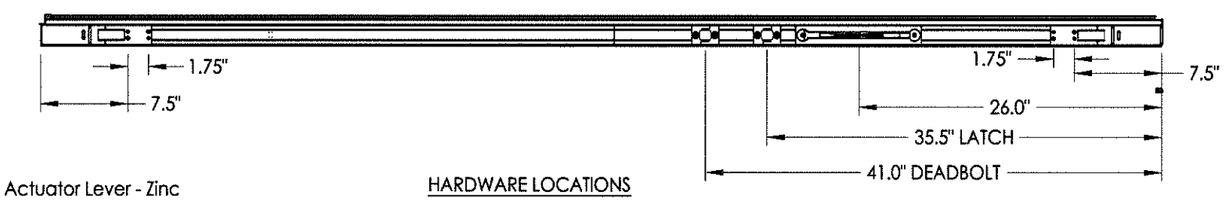

HARDWARE LOCATIONS

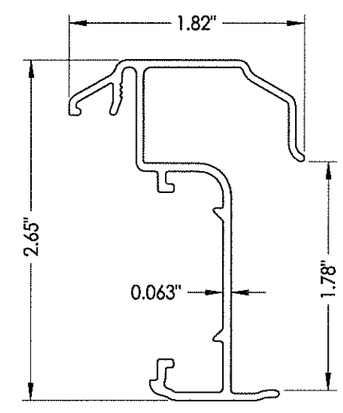

Astragal Section

STATE OF TEXAS
LYNDON F. SCHMIDT
104123
LICENSED
PROFESSIONAL ENGINEER

1.13.14

Documents Prepared By: Lyndon F. Schmidt, P.E.
TEXAS P.E. #104123

RW BUILDING CONSULTANTS, INC.
P.O. Box 230 Valrico FL 33595
Phone No.: 813.659.9197

TEXAS BOARD OF PROFESSIONAL ENGINEERS
CERTIFICATE OF REGISTRATION # F-11852

PRODUCT: ENDURA

PART OR ASSEMBLY: ASTRAGAL DETAILS (ULTIMATE FLIP LEVER)

REVISIONS

NO.	DATE		BY
1	1/09/14	ADDED ARTICULATING SILL	LFS

DATE: 8/20/12
SCALE: N.T.S.
DWG. BY: JK
CHK. BY: LFS
DRAWING NO.: TX-4225
SHEET 2 OF 8

© 2012 R.W. BUILDING CONSULTANTS INC.

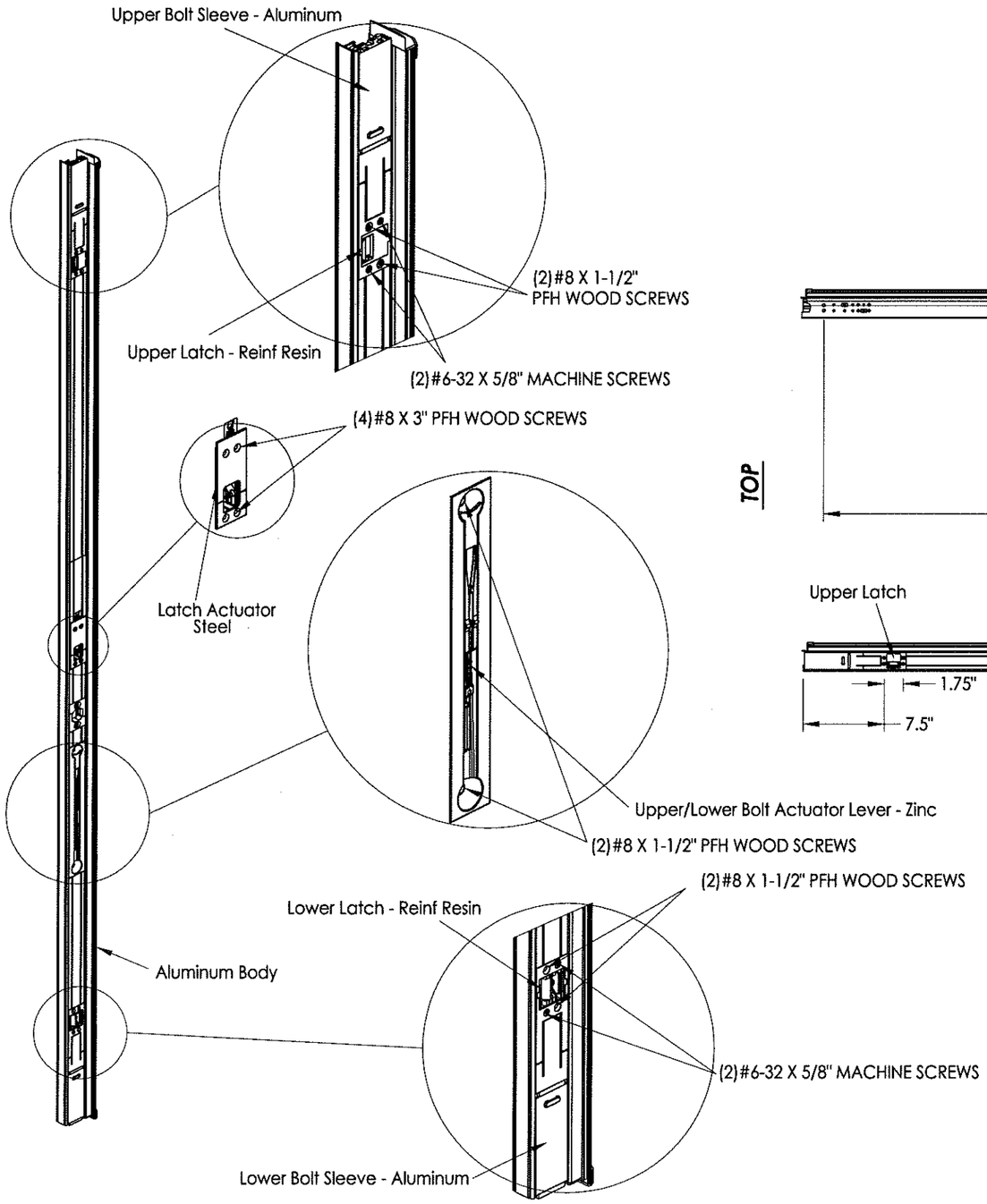

ULTIMATE MULTI-POINT ASTRAGAL

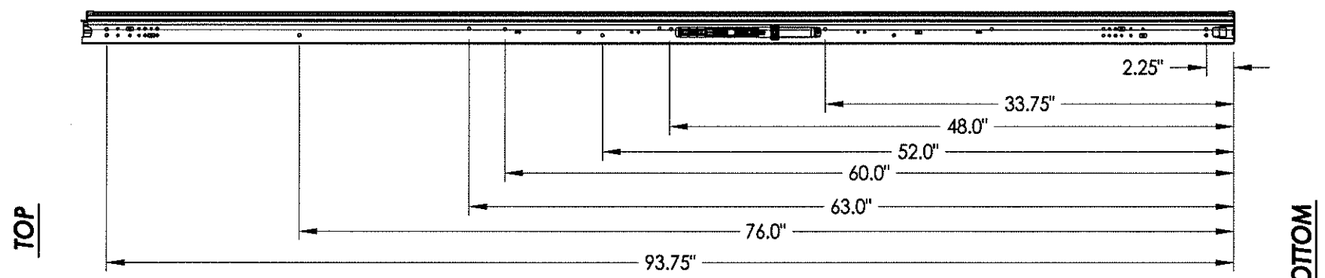

ANCHOR SCREW LOCATIONS

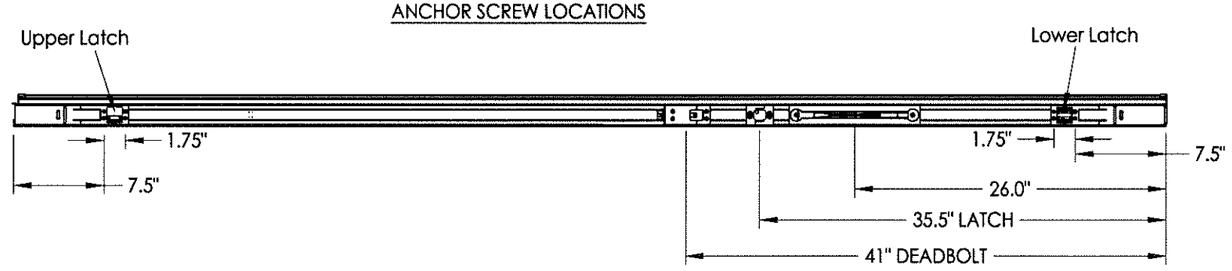

HARDWARE LOCATIONS

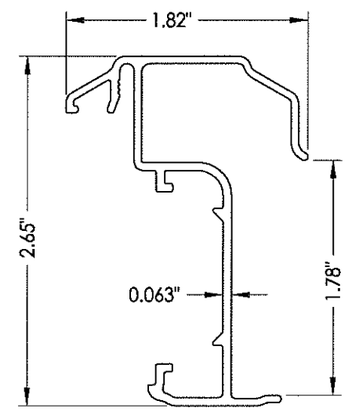

Astragal Section

STATE OF TEXAS
LYNDON F. SCHMIDT
104123
LICENSED PROFESSIONAL ENGINEER

Documents Prepared By: Lyndon F. Schmidt, P.E.
TEXAS P.E. #104123

RW BUILDING CONSULTANTS, INC.
P.O. Box 230 Valrico FL. 33595
Phone No.: 813.659.9197

TEXAS BOARD OF PROFESSIONAL ENGINEERS
CERTIFICATE OF REGISTRATION # F-11852

PRODUCT: ENDURA

PART OR ASSEMBLY: ASTRAGAL DETAILS (ULTIMATE MULTI-POINT)

NO.	DATE	REVISIONS	BY
1	1/09/14	ADDED ARTICULATING SILL	LFS

DATE: 8/20/12
SCALE: N.T.S.
DWG. BY: JK
CHK. BY: LFS
DRAWING NO.: TX-4225
SHEET 3 OF 8

© 2012 R.W. BUILDING CONSULTANTS INC.

R:\A - Projects\Project Folders\Proj 1601 - 1700\PF 1675\D. RWBC Drawings\TX-4224-27.dwg, 3-2

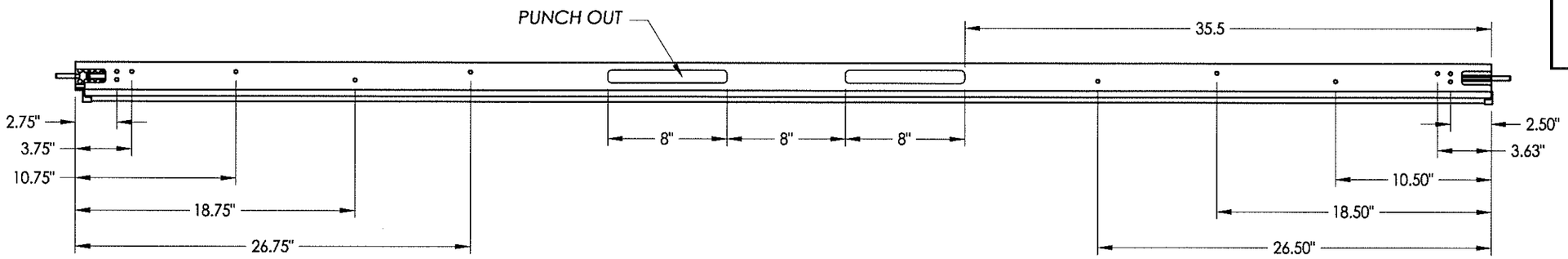

ANCHOR SCREW LOCATIONS

TOP

BOTTOM

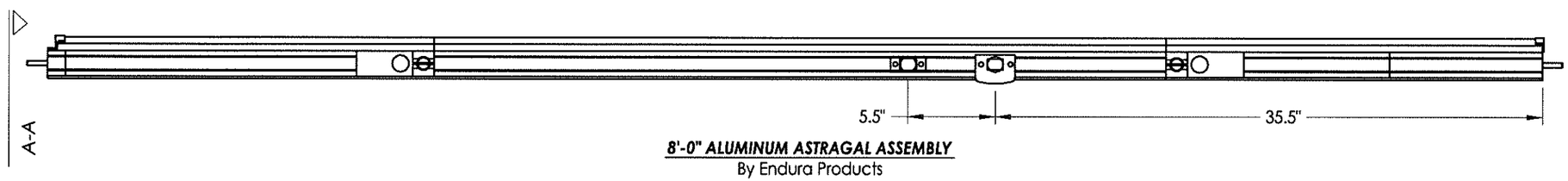

8'-0" ALUMINUM ASTRAGAL ASSEMBLY
By Endura Products

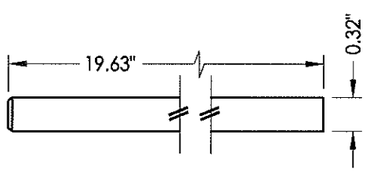

SLIDE BOLT ROD
MATL: Steel

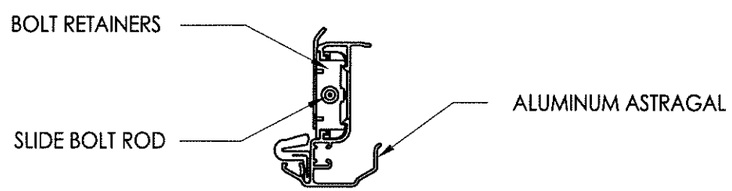

VIEW A-A
Aluminum Astragal Assembly

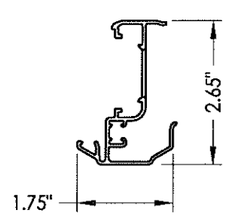

ULTIMATE HURRICANE ASTRAGAL

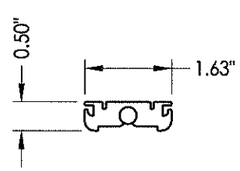

BOLT RETAINER
MATL: 9-3/4" Aluminum

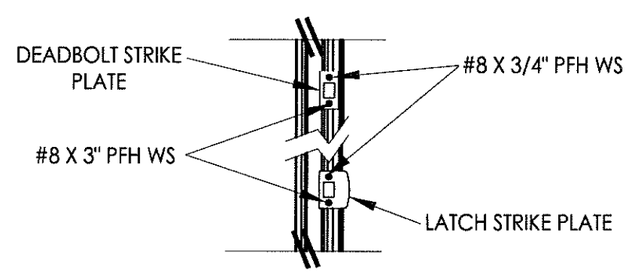

LATCH AND DEADBOLT DETAIL

STATE OF TEXAS
LYNDON F. SCHMIDT
104123
LICENSED
PROFESSIONAL ENGINEER
1.13.14

Documents Prepared By: Lyndon F. Schmidt, P.E.
TEXAS P.E. #104123
RW BUILDING CONSULTANTS, INC.
P.O. Box 230 Valrico FL. 33595
Phone No.: 813.659.9197
TEXAS BOARD OF PROFESSIONAL ENGINEERS
CERTIFICATE OF REGISTRATION # F-11852

PRODUCT: ENDURA

PART OR ASSEMBLY: ASTRAGAL DETAILS (ULTIMATE HURRICANE)

NO.	DATE	REVISIONS	BY
1	1/09/14	ADDED ARTICULATING SILL	LFS

DATE: 8/20/12
SCALE: N.T.S.
DWG. BY: JK
CHK. BY: LFS
DRAWING NO.: TX-4225
SHEET 4 OF 8

© 2008 R.W. BUILDING CONSULTANTS INC.

R:\A - Projects\Project Folders\Proj 1601 - 1700\PF 1675\D. RWBC Drawings\TX-4224-27.dwg, 4-2

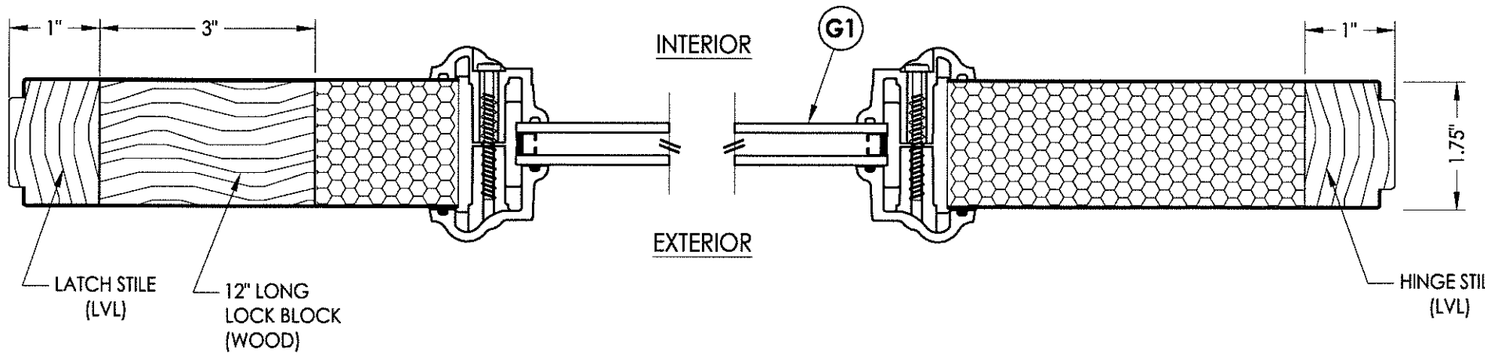

1/5 **HORIZONTAL CROSS SECTION**

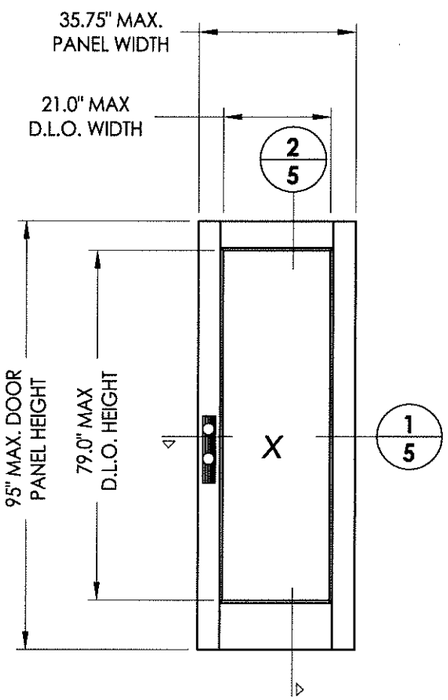

JELD-WEN
Insert Glazed
(steel)

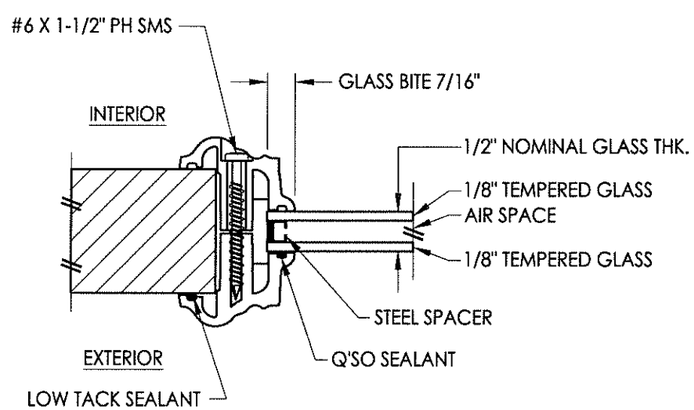

G1 **GLAZING DETAIL**
Lip Lite Insert Glazing

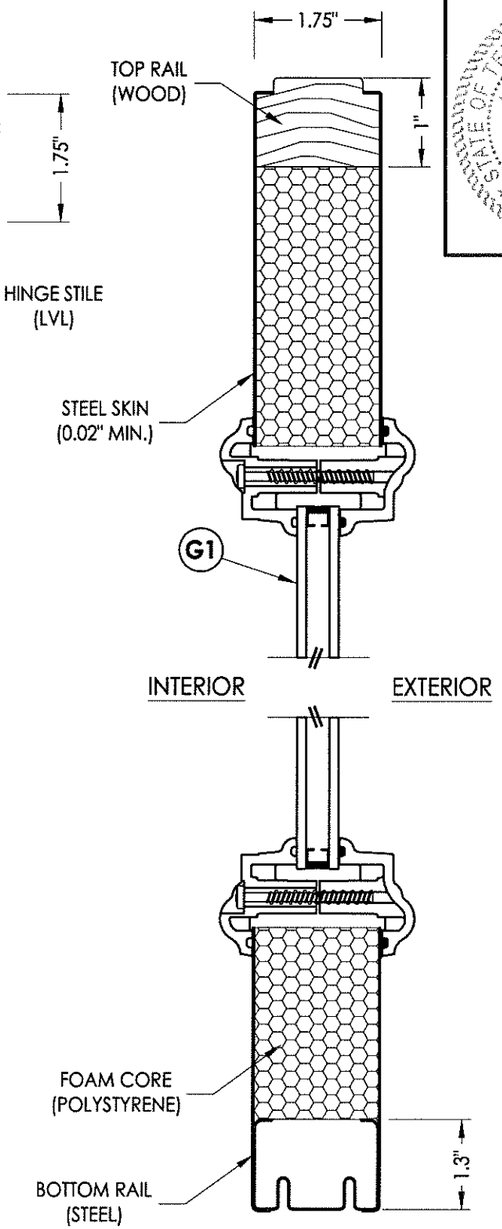

2/5 **VERTICAL CROSS SECTION**

STATE OF TEXAS
LYNDON F. SCHMIDT
104123
LICENSED
PROFESSIONAL ENGINEER

1.13.16

Documents Prepared By: Lyndon F. Schmidt, P.E.
TEXAS P.E. #104123

RW BUILDING CONSULTANTS, INC.
P.O. Box 230 Valrico FL. 33595
Phone No.: 813.659.9197

TEXAS BOARD OF PROFESSIONAL ENGINEERS
CERTIFICATE OF REGISTRATION # F-11852

PRODUCT: ENDURA

PART OR ASSEMBLY: DOOR PANEL DETAILS (LIP LITE INSERT GLAZING)

REVISIONS

NO.	DATE		BY
1	1/09/14	ADDED ARTICULATING SILL	LFS

DATE: 8/20/12
SCALE: N.T.S.
DWG. BY: JK
CHK. BY: LFS
DRAWING NO.: TX-4225
SHEET 5 OF 8

© 2012 R.W. BUILDING CONSULTANTS INC.

R:\A - Projects\Project Folders\Proj 1601 - 1700\PF 1675\D. RWBC Drawings\TX-4224-27.dwg, 5-2

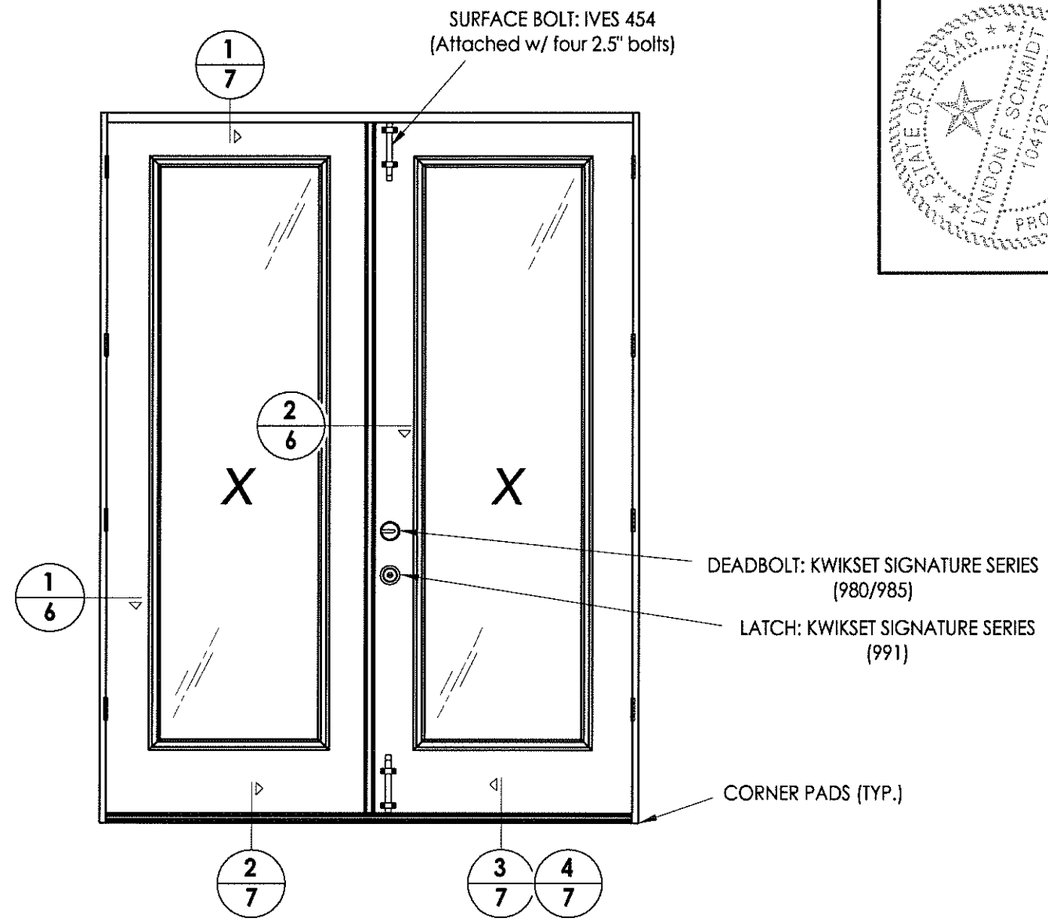

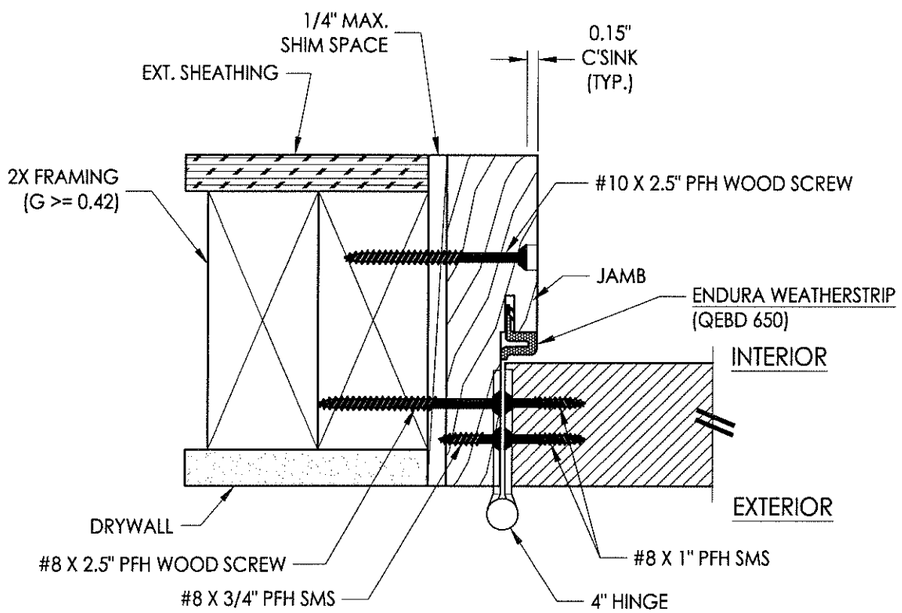

1/6 HORIZONTAL CROSS SECTION
Inswing shown - Outswing also approved

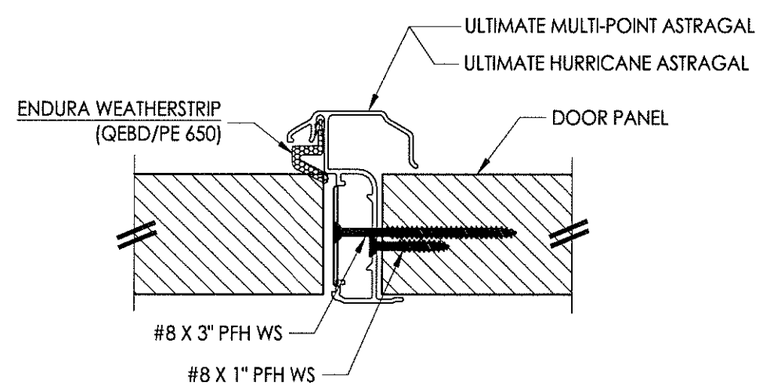

2/6 HORIZONTAL CROSS SECTION

STATE OF TEXAS
LYNDON F. SCHMIDT
104123
LICENSED
PROFESSIONAL ENGINEER

1-13-14

Documents Prepared By: Lyndon F. Schmidt, P.E.
TEXAS P.E. #104123

RW BUILDING CONSULTANTS, INC.
P.O. Box 230 Valrico FL 33595
Phone No.: 813.659.9197

TEXAS BOARD OF PROFESSIONAL ENGINEERS
CERTIFICATE OF REGISTRATION # F-11852

PRODUCT: ENDURA

PART OR ASSEMBLY: HORIZONTAL CROSS SECTIONS

REVISIONS

NO.	DATE		BY
1	1/09/14	ADDED ARTICULATING SILL	LFS

DATE: 8/20/12
SCALE: N.T.S.
DWG. BY: JK
CHK. BY: LFS
DRAWING NO.: TX-4225
SHEET 6 OF 8

© 2012 R.W. BUILDING CONSULTANTS INC.

R:\A - Projects\Project Folders\Proj 1601 - 1700\PF 1675\D. RWBC Drawings\TX-4224-27.dwg, 6-2

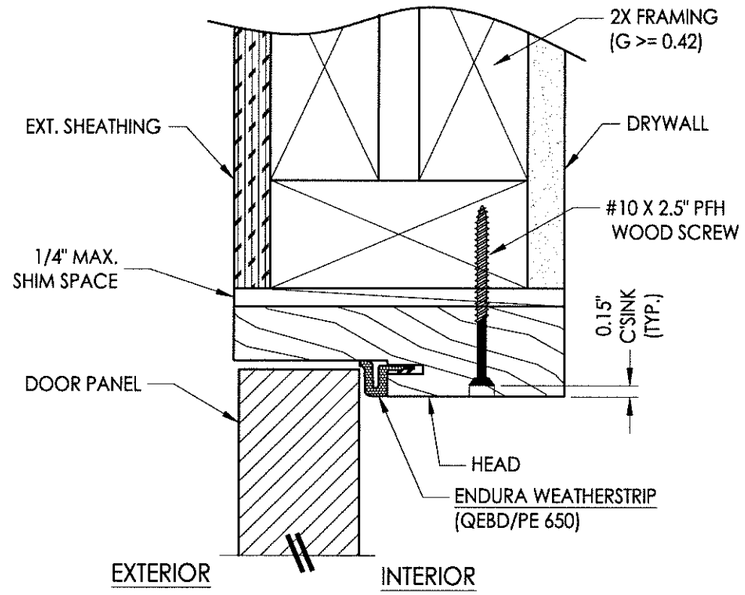

1/7 **VERTICAL CROSS SECTION**
Outswing shown - inswing also approved

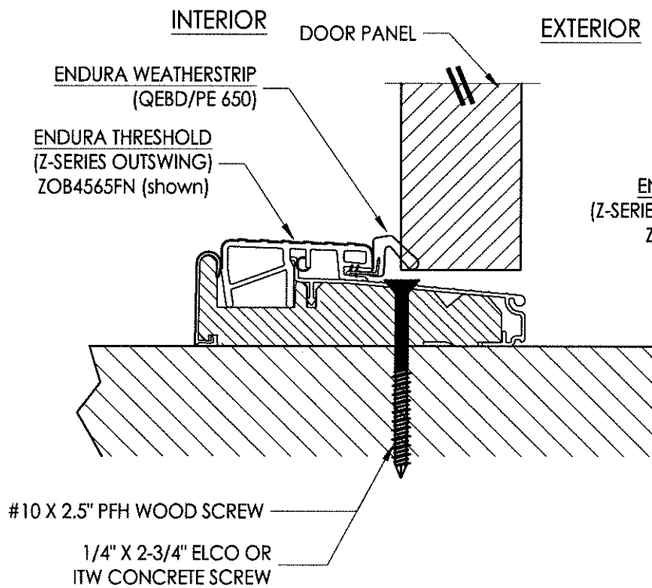

2/7 **VERTICAL CROSS SECTION**
Outswing shown

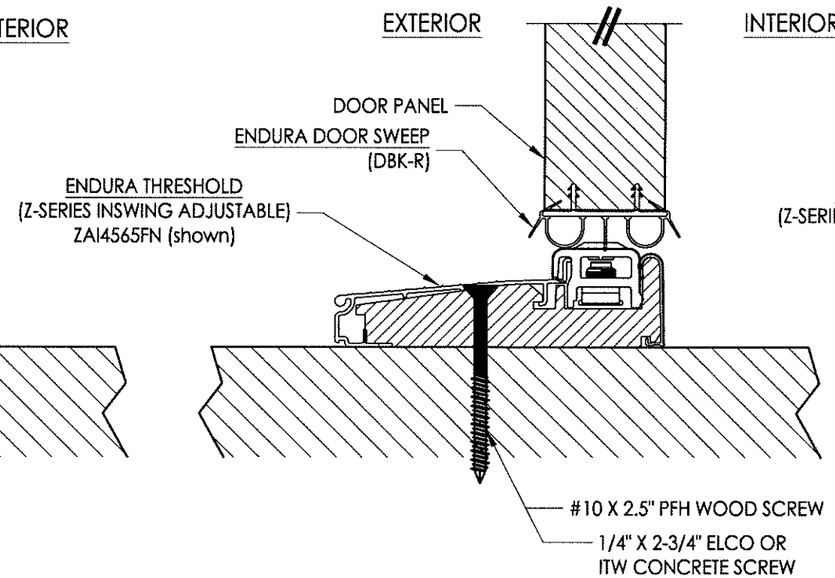

3/7 **VERTICAL CROSS SECTION**
Inswing configuration

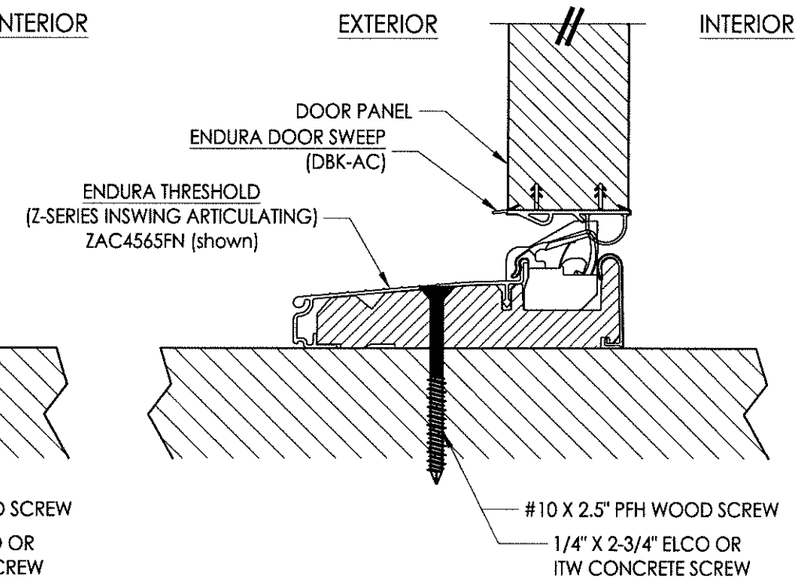

4/7 **VERTICAL CROSS SECTION**
Inswing configuration

STATE OF TEXAS
LYNDON F. SCHMIDT
104123
LICENSED
PROFESSIONAL ENGINEER
1/13/14

Documents Prepared By: Lyndon F. Schmidt, P.E.
TEXAS P.E. #104123

RW BUILDING CONSULTANTS, INC.
P.O. Box 230 Valrico FL. 33595
Phone No.: 813.659.9197

TEXAS BOARD OF PROFESSIONAL ENGINEERS
CERTIFICATE OF REGISTRATION # F-11852

PRODUCT: ENDURA

PART OR ASSEMBLY: VERTICAL CROSS SECTIONS

NO.	DATE	REVISIONS	BY
1	1/09/14	ADDED ARTICULATING SILL	LFS

DATE: 8/20/12
SCALE: N.T.S.
DWG. BY: JK
CHK. BY: LFS
DRAWING NO.: TX-4225
SHEET 7 OF 8

© 2012 R.W. BUILDING CONSULTANTS INC.

R:\A - Projects\Project Folders\Proj 1601 - 1700\PF 1675\D. RWBC Drawings\TX-4224-27.dwg, 7-2

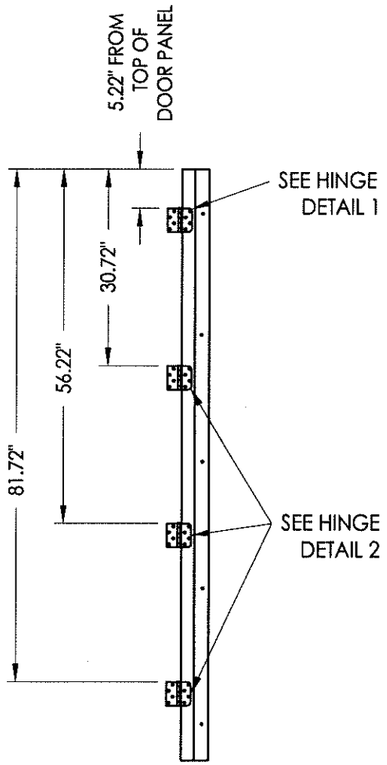

HINGE JAMB

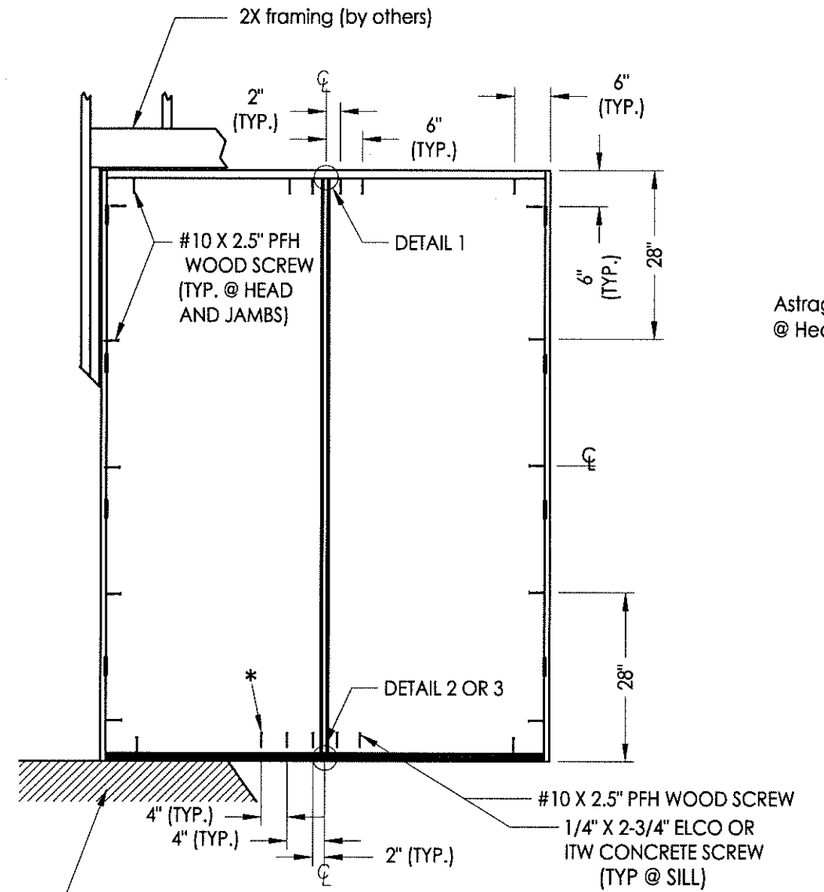

FRAME ANCHORING
XX

*NOTE: This anchor required for D.P. > 40 PSF.

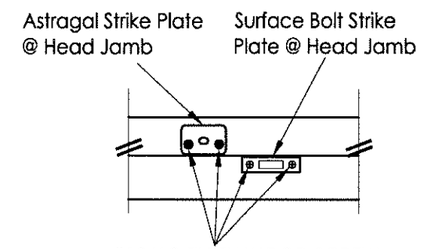

DETAIL 1
Outswing

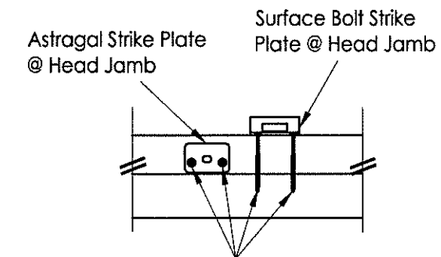

DETAIL 1
Inswing

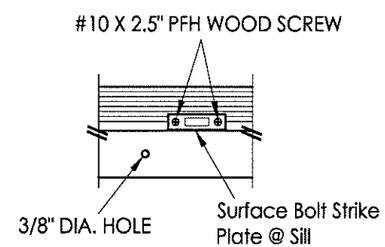

DETAIL 2
Outswing

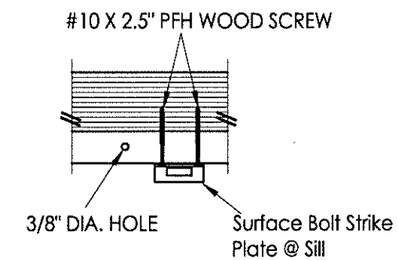

DETAIL 2
Inswing

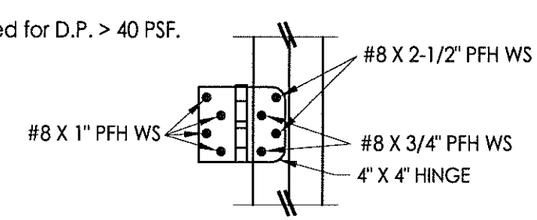

HINGE DETAIL 1

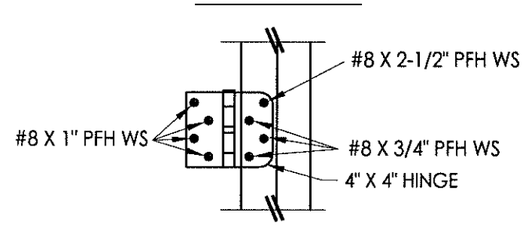

HINGE DETAIL 2

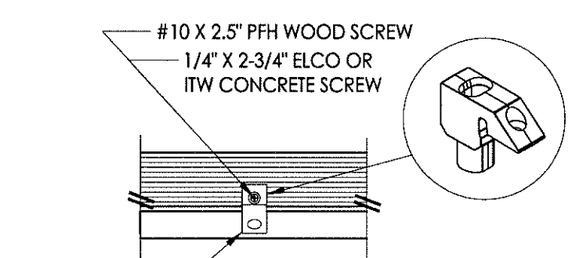

DETAIL 3
Inswing

CONCRETE ANCHOR NOTES:

1. *Concrete anchor locations at the corners may be adjusted to maintain the min. edge distance to mortar joints.*
2. *Concrete anchor locations noted as "MAX. ON CENTER" must be adjusted to maintain the min. edge distance to mortar joints, additional concrete anchors may be required to ensure the "MAX. ON CENTER" dimension are not exceeded.*
3. *Concrete anchor table:*

ANCHOR TYPE	ANCHOR SIZE	MIN. EMBEDMENT	MIN. CLEARANCE TO MASONRY EDGE	MIN. CLEARANCE TO ADJACENT ANCHOR
ITW TAPCON®	1/4"	1-3/4"	2-1/2"	3"
ELCO ULTRACON®	1/4"	1-3/4"	1"	3"

STATE OF TEXAS
LYNDON F. SCHMIDT
104123
LICENSED PROFESSIONAL ENGINEER
1-13-14

Documents Prepared By: Lyndon F. Schmidt, P.E.
TEXAS P.E. #104123

RW BUILDING CONSULTANTS, INC.
P.O. Box 230 Valrico FL. 33595
Phone No.: 813.659.9197

TEXAS BOARD OF PROFESSIONAL ENGINEERS
CERTIFICATE OF REGISTRATION # F-11852

PRODUCT: ENDURA

PART OR ASSEMBLY: FRAME ANCHORING

NO.	DATE	REVISIONS	BY
1	1/09/14	ADDED ARTICULATING SILL	LFS

DATE: 8/20/12
SCALE: N.T.S.
DWG. BY: JK
CHK. BY: LFS
DRAWING NO.: TX-4225
SHEET 8 OF 8

© 2012 R.W. BUILDING CONSULTANTS INC.

R:\A - Projects\Project Folders\Proj 1601 - 1700\PF 1675\D. RWBC Drawings\TX-4224-27.dwg, 8-2