plastpro

5200 W. CENTURY BLVD.
LOS ANGELES, CA 90045

Rustic/Mahogany Series Fiberglass Single Door w/ & w/out Sidelite(s)

INSWING / OUTSWING "IMPACT"

EVALUATED FOR USE IN THE STATE OF TEXAS

The Plastpro Fiberglass Door described herein complies with the 2006 International Residential Code (IRC), Sections R301 & R613 and the 2006 International Building Code (IBC), Sections 1405.12, 1609, 1714.5, 2403 and 2404 (including Texas revisions) subject to the following conditions:

1. Anchors shall be as listed and spaced as shown in the details. Anchor embedment to base material shall be beyond wall dressing or stucco.
2. This system has been tested and evaluated as a large missile impact protective system for installation in the Seaward, Inland I and Inland II areas. This product meets missile level "D" and includes Wind Zone 3 as defined in ASTM E 1996.
3. Allowable design pressure requirements must be equal to or less than the design pressure rating shown in the design pressure chart, sheet 1 of this drawing.
4. Conditions not covered by this drawing are subject to further engineering analysis.

TABLE OF CONTENTS

SHEET#	DESCRIPTION
1	Typical elevations, design pressures & general notes
2	Door panel details
3	Sidelite panel details and glazing detail
4	Elevations
5	Horizontal cross sections
6	Vertical cross sections
7	Vertical cross sections
8	Frame anchoring
9	Bill of materials and components

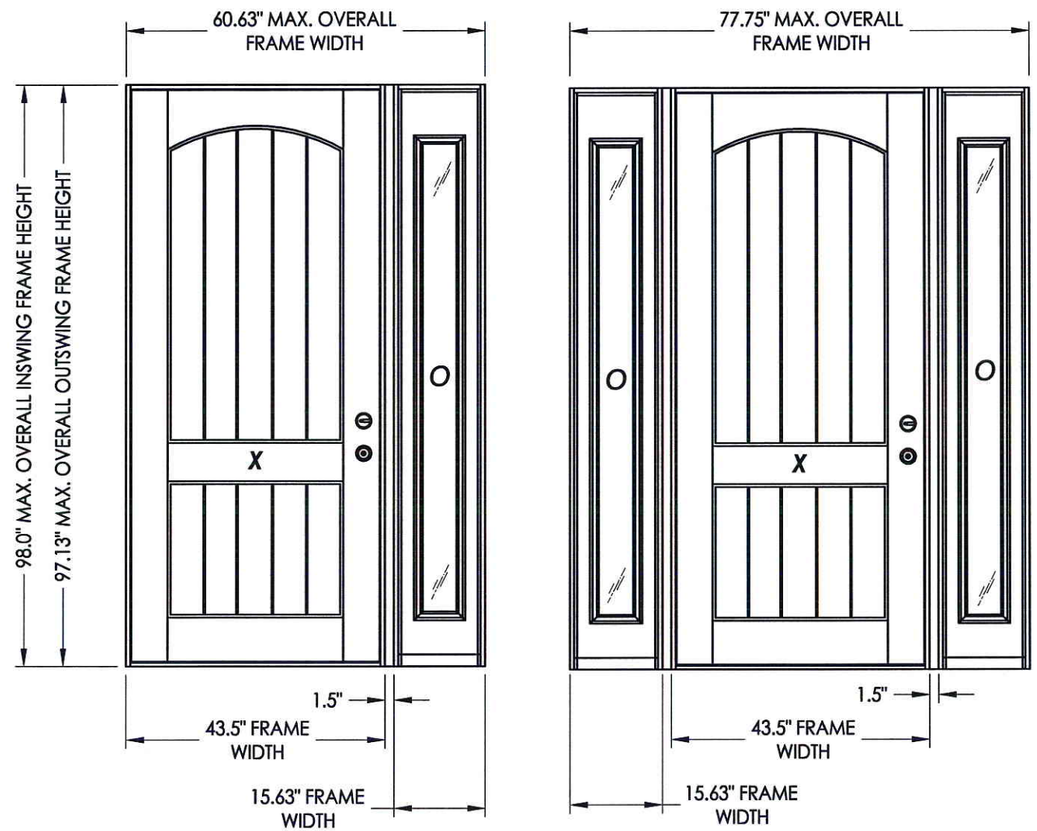

CONFIGURATION	MAX. FRAME DIMENSION	MAX. SIDELITE D.L.O. DIMENSION	DESIGN PRESSURE (PSF)	
			POSITIVE	NEGATIVE
XO/OX	60.63" x 98.0"	6.5" X 78.5"	+55.0	-55.0
OXO	77.75" x 98.0"	6.5" X 78.5"	+55.0	-55.0

STATE OF TEXAS
LYNDON F. SCHMIDT
104123
LICENSED PROFESSIONAL ENGINEER

Documents Prepared By: Lyndon F. Schmidt, P.E.
TEXAS P.E. #104123

RW BUILDING CONSULTANTS, INC.
P.O. Box 230 Valrico FL. 33595
Phone No.: 813.659.9197

TEXAS BOARD OF PROFESSIONAL ENGINEERS
CERTIFICATE OF REGISTRATION # F-11852

PRODUCT: PLASTPRO FIBERGLASS DOOR

PART OR ASSEMBLY: TYPICAL ELEVATION, DESIGN PRESSURES & GENERAL NOTES

REVISIONS

NO.	DATE	BY

DATE: 12/04/12
SCALE: N.T.S.
DWG. BY: JK
CHK. BY: LFS
DRAWING NO.: TX-4288
SHEET 1 OF 9

© 2012 R.W. BUILDING CONSULTANTS INC.

R:\A - Projects\Project Folders\Proj 1601 - 1700\PF 1662\D. RWBC Drawings\TX-4287-88.dwg, TX-4288

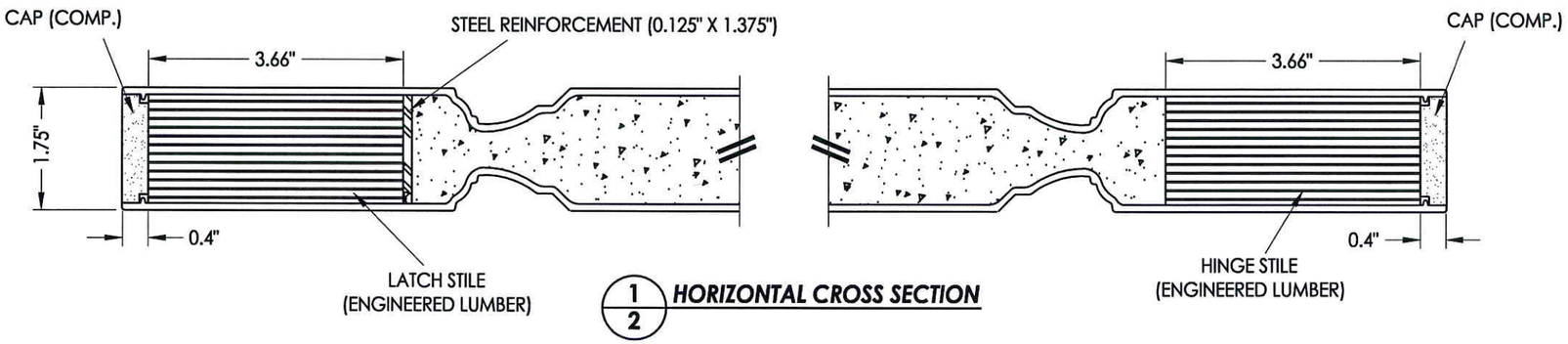

1/2 **HORIZONTAL CROSS SECTION**

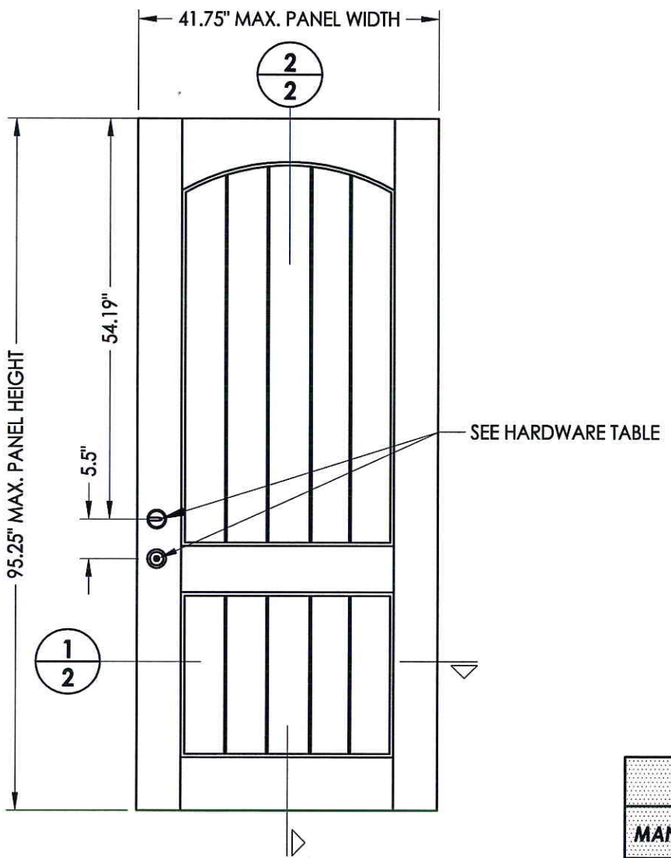

40 **DOOR PANEL**
Rustic / Mahogany Series

HARDWARE TABLE		
MANUFACTURER	MODEL	
KWIKSET	KNOB:	SIGNATURE SERIES
	DEADBOLT:	SIGNATURE SERIES (780)

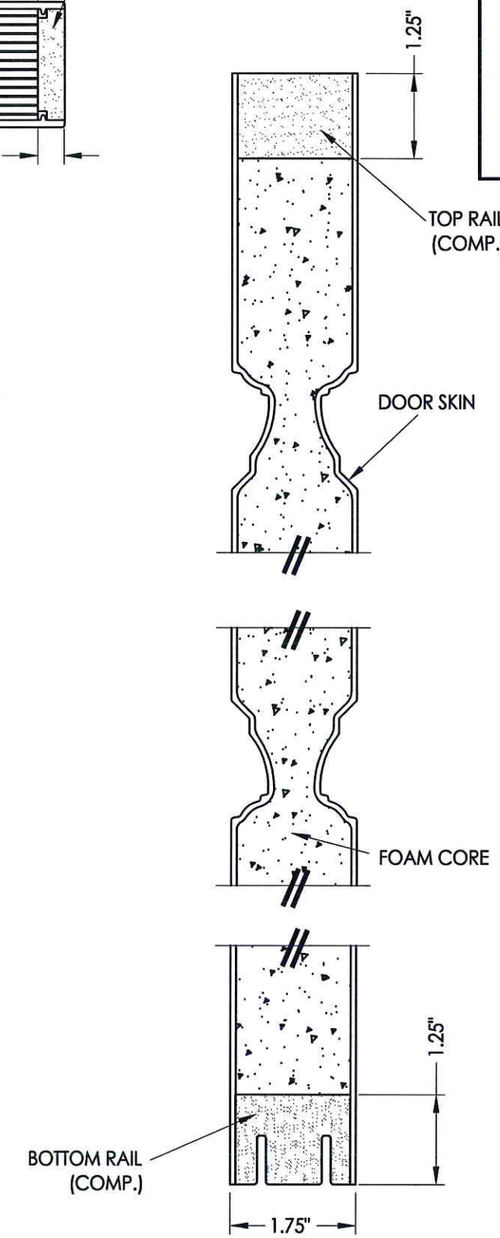

2/2 **VERTICAL CROSS SECTION**

FIBERGLASS DOOR SKIN: MIN. 0.100" THK.
CORE MATERIAL: POLYURETHANE FOAM (1.9 PCF MIN.)

STATE OF TEXAS
LYNDON F. SCHMIDT
104123
LICENSED PROFESSIONAL ENGINEER
12-5-12

Documents Prepared By: Lyndon F. Schmidt, P.E.
TEXAS P.E. #104123
RW BUILDING CONSULTANTS, INC.
P.O. Box 230 Valrico FL. 33595
Phone No.: 813.659.9197
TEXAS BOARD OF PROFESSIONAL ENGINEERS
CERTIFICATE OF REGISTRATION # F-11852

PRODUCT: PLASTPRO INC. FIBERGLASS DOOR

PART OR ASSEMBLY: DOOR PANEL DETAILS

NO.	DATE	BY

REVISIONS

DATE: 12/04/12
SCALE: N.T.S.
DWG. BY: JK
CHK. BY: LFS
DRAWING NO.: TX-4288
SHEET 2 OF 9

© 2012 R.W. BUILDING CONSULTANTS INC.

R:\A - Projects\Project Folders\Proj 1601 - 1700\PF 1662\D. RWBC Drawings\TX-4287-88.dwg, 2.2

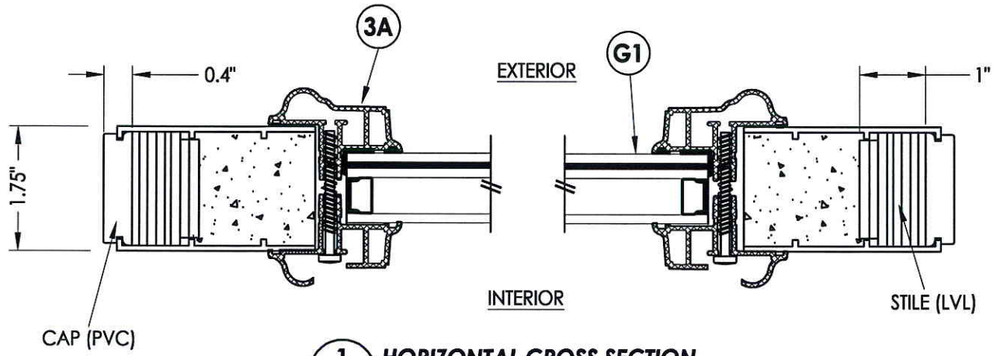

1/3 **HORIZONTAL CROSS SECTION**

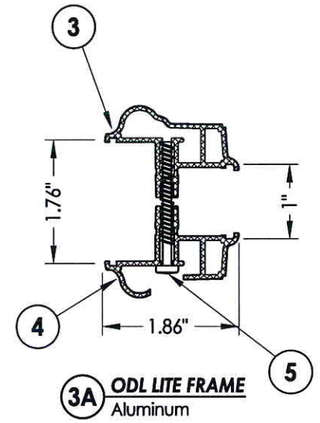

3A **ODL LITE FRAME**
Aluminum

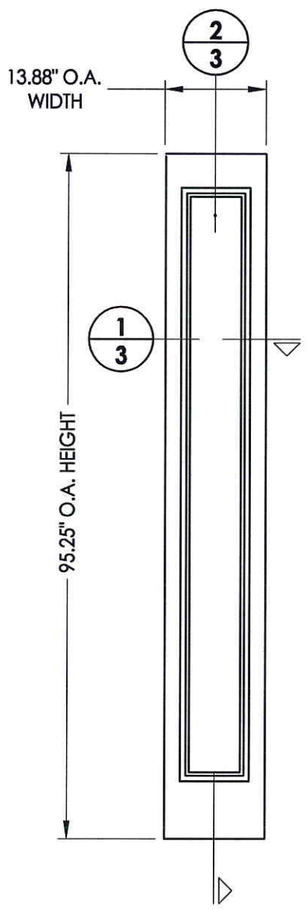

50 **SIDELITE PANEL**

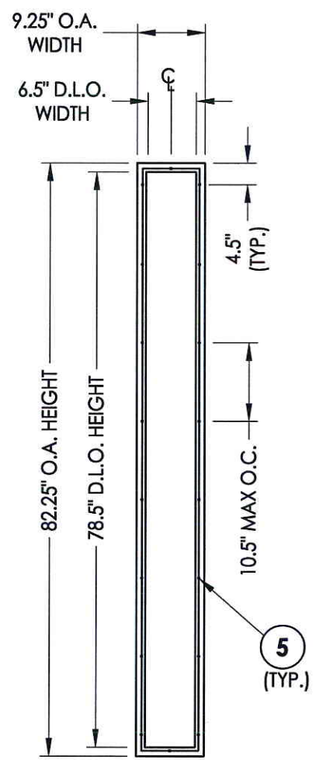

ODL LITE FRAME

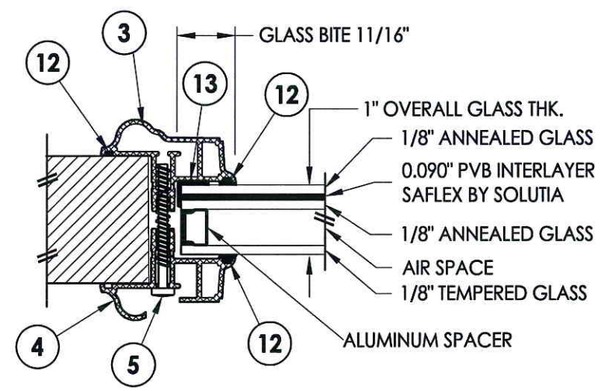

G1 **GLAZING DETAIL**

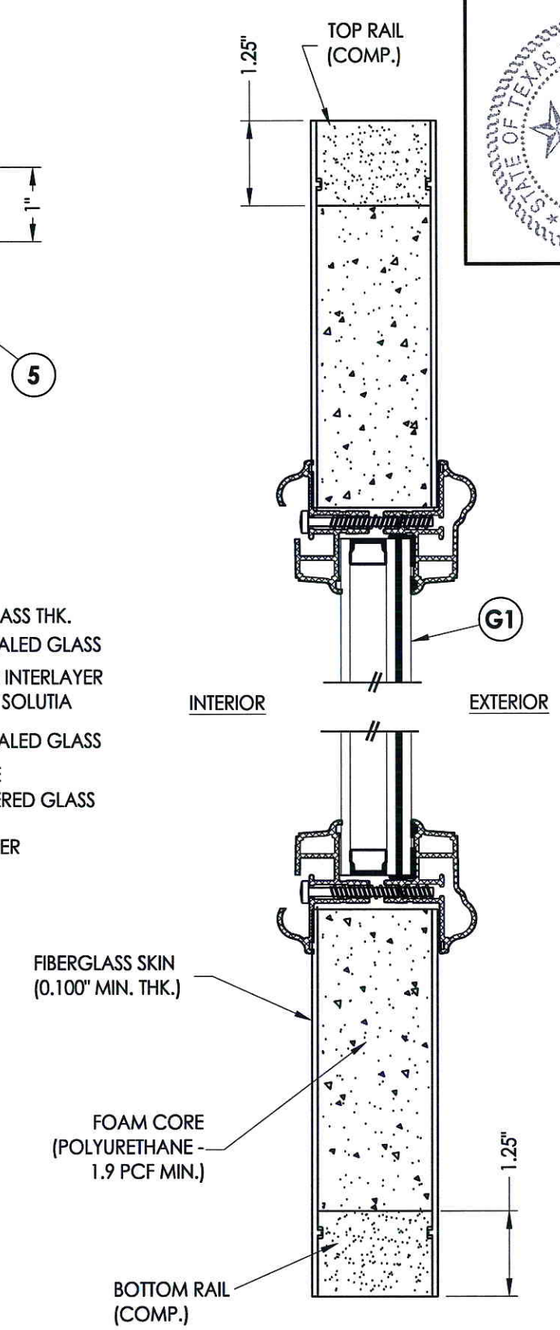

2/3 **VERTICAL CROSS SECTION**

STATE OF TEXAS
LYNDON F. SCHMIDT
104123
LICENSED PROFESSIONAL ENGINEER

Documents Prepared By: Lyndon F. Schmidt, P.E.
TEXAS P.E. #104123

RW BUILDING CONSULTANTS, INC.
P.O. Box 230 Valrico FL. 33595
Phone No.: 813.659.9197

TEXAS BOARD OF PROFESSIONAL ENGINEERS
CERTIFICATE OF REGISTRATION # F-11852

PRODUCT: PLASTPRO INC. FIBERGLASS DOOR

PART OR ASSEMBLY: SIDELITE PANEL DETAILS AND GLAZING DETAIL

NO.	DATE	REVISIONS	BY

DATE: 12/04/12
SCALE: N.T.S.
DWG. BY: JK
CHK. BY: LFS
DRAWING NO.: TX-4288
SHEET 3 OF 9

© 2012 R.W. BUILDING CONSULTANTS INC.

R:\A - Projects\Project Folders\Proj 1601 - 1700\PF 1662\D. RWBC Drawings\TX-4287-88.dwg, 2-3

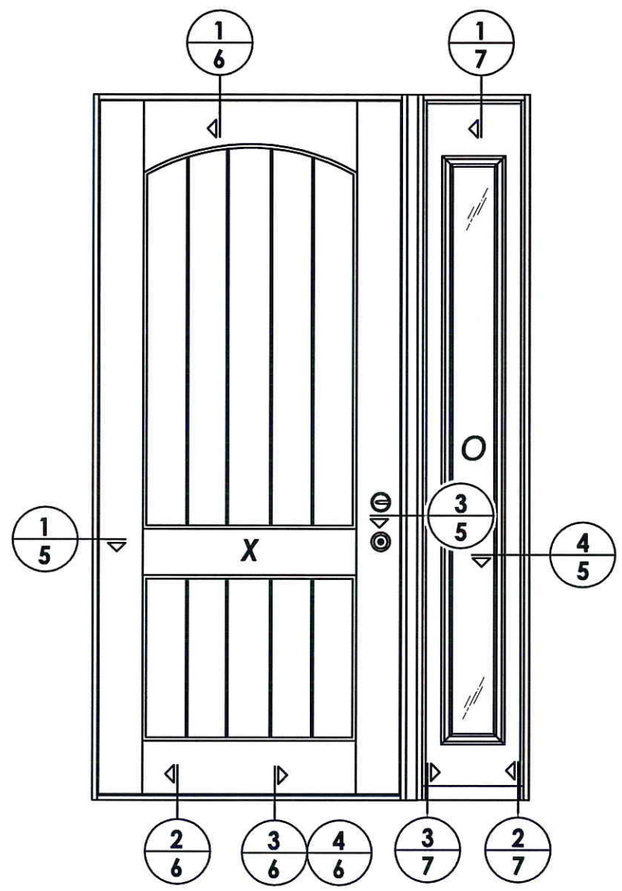

ELEVATION (XO - OX)

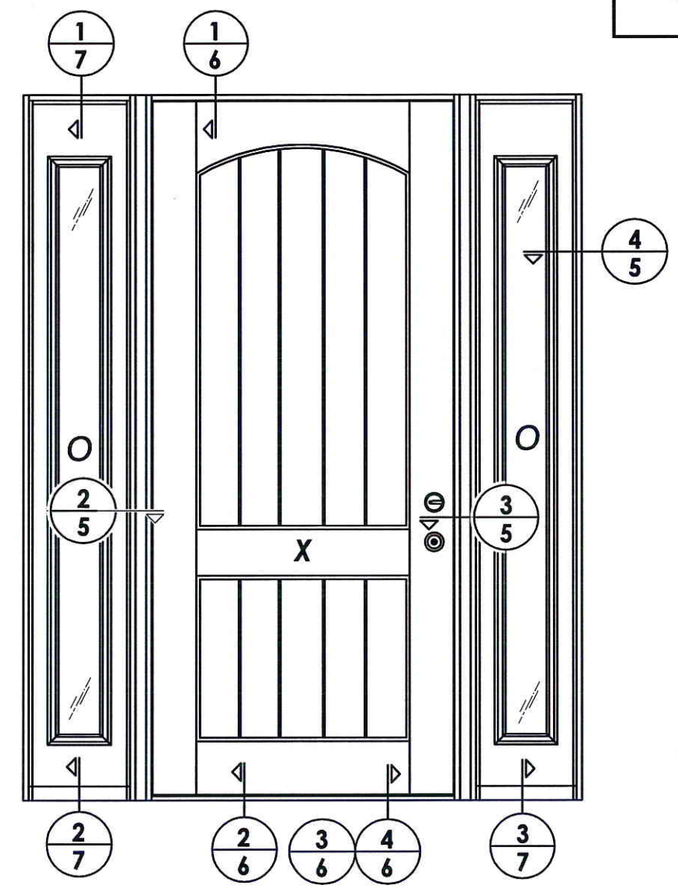

ELEVATION (OXO)

STATE OF TEXAS
LYNDON F. SCHMIDT
104123
LICENSED
PROFESSIONAL ENGINEER

12-5-12

Documents Prepared By: Lyndon F. Schmidt, P.E.
TEXAS P.E. #104123

RW BUILDING CONSULTANTS, INC.
P.O. Box 230 Valrico FL. 33595
Phone No.: 813.659.9197

TEXAS BOARD OF PROFESSIONAL ENGINEERS
CERTIFICATE OF REGISTRATION # F-11852

PRODUCT: *PLASTPRO FIBERGLASS DOOR*

PART OR ASSEMBLY: *ELEVATIONS*

NO.	DATE	BY

REVISIONS

DATE: 12/04/12
SCALE: N.T.S.
DWG. BY: JK
CHK. BY: LFS
DRAWING NO.: TX-4288
SHEET 4 OF 9

© 2010 R.W. BUILDING CONSULTANTS INC.

R:\A - Projects\Project Folders\Proj 1601 - 1700\PF 1662\D. RWBC Drawings\TX-4287-88.dwg, 2-4

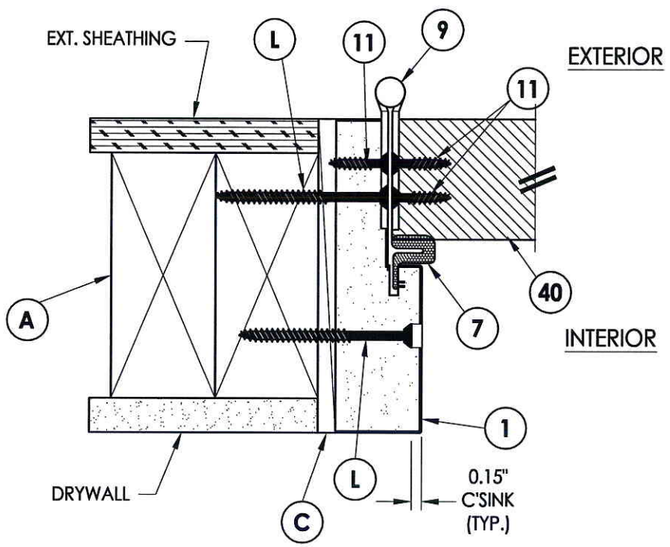

1/5 HORIZONTAL CROSS SECTION
Outswing shown - Inswing also approved

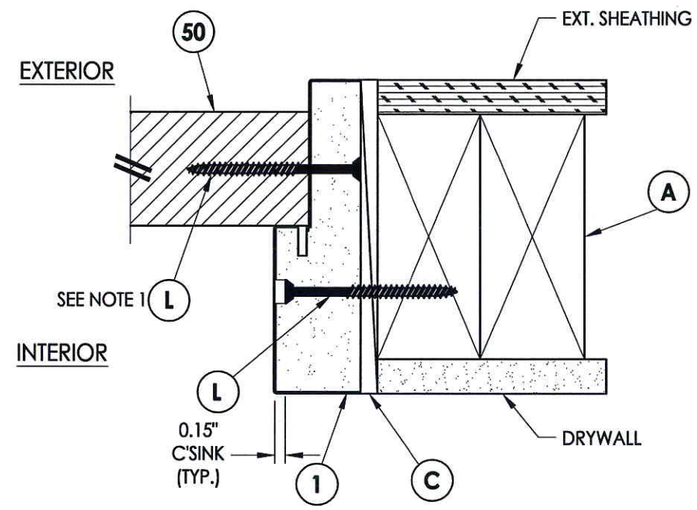

4/5 HORIZONTAL CROSS SECTION
Outswing shown - Inswing also approved

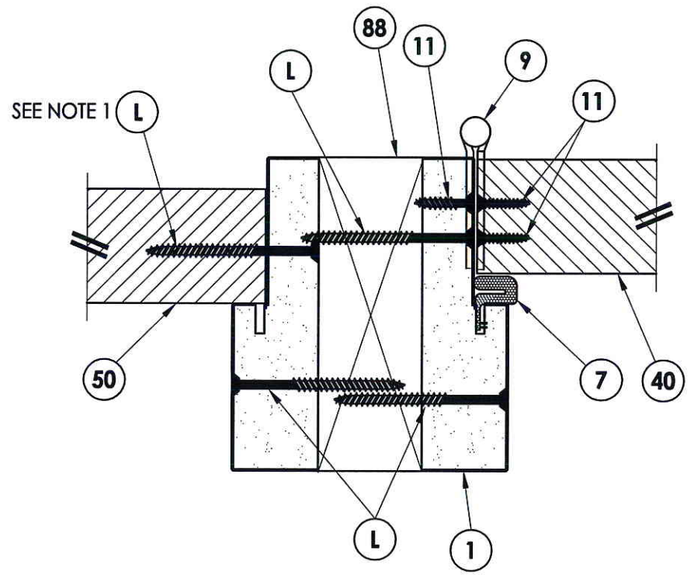

2/5 HORIZONTAL CROSS SECTION
Outswing shown - Inswing also approved

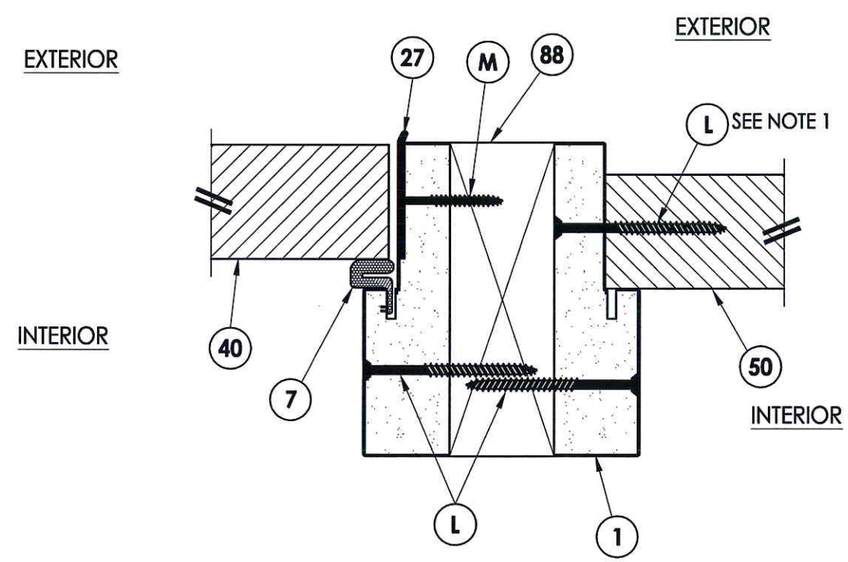

3/5 HORIZONTAL CROSS SECTION
Outswing shown - Inswing also approved

NOTE:
1. Spacing for item L: 6" from ends and 9 more equally spaced along sidelite (11 total).

STATE OF TEXAS
LYNDON F. SCHMIDT
104123
LICENSED
PROFESSIONAL ENGINEER
12-5-12

Documents Prepared By: Lyndon F. Schmidt, P.E.
TEXAS P.E. #104123
RW BUILDING CONSULTANTS, INC.
P.O. Box 230 Valrico FL 33595
Phone No.: 813.659.9197
TEXAS BOARD OF PROFESSIONAL ENGINEERS
CERTIFICATE OF REGISTRATION # F-11852

PRODUCT: PLASTPRO INC. FIBERGLASS DOOR

PART OR ASSEMBLY: HORIZONTAL CROSS SECTIONS

NO.	DATE	REVISIONS	BY

DATE: 12/04/12
SCALE: N.T.S.
DWG. BY: JK
CHK. BY: LFS
DRAWING NO.: TX-4288
SHEET 5 OF 9

© 2012 R.W. BUILDING CONSULTANTS INC.

R:\A - Projects\Project Folders\Proj 1601 - 1700\PF 1662\D. RWBC Drawings\TX-4287-88.dwg, 2-5

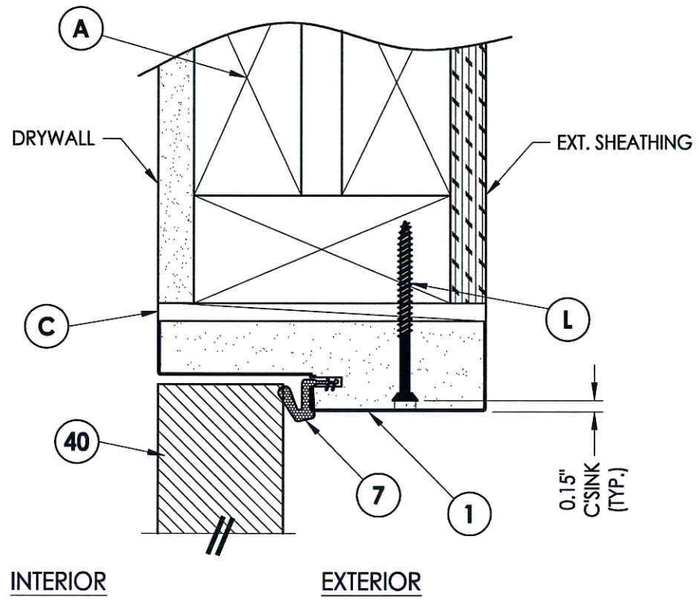

1/6 **VERTICAL CROSS SECTION**
Inswing shown - Outswing also approved

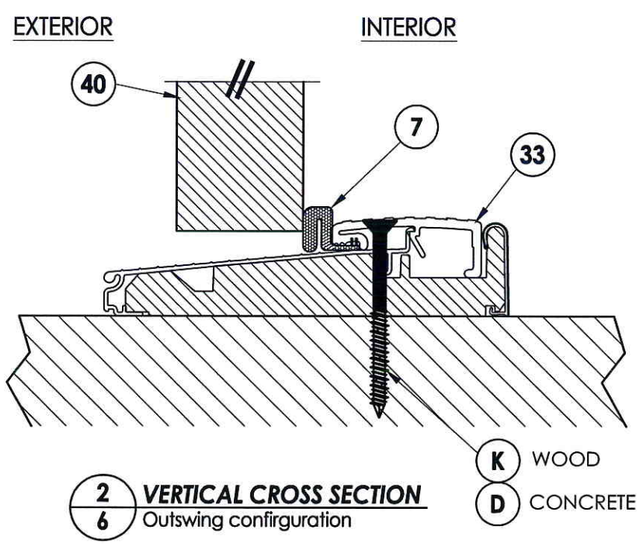

2/6 **VERTICAL CROSS SECTION**
Outswing confirguration

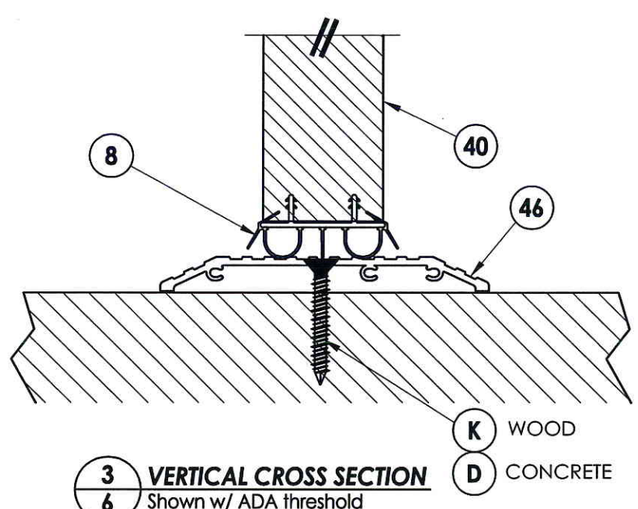

3/6 **VERTICAL CROSS SECTION**
Shown w/ ADA threshold

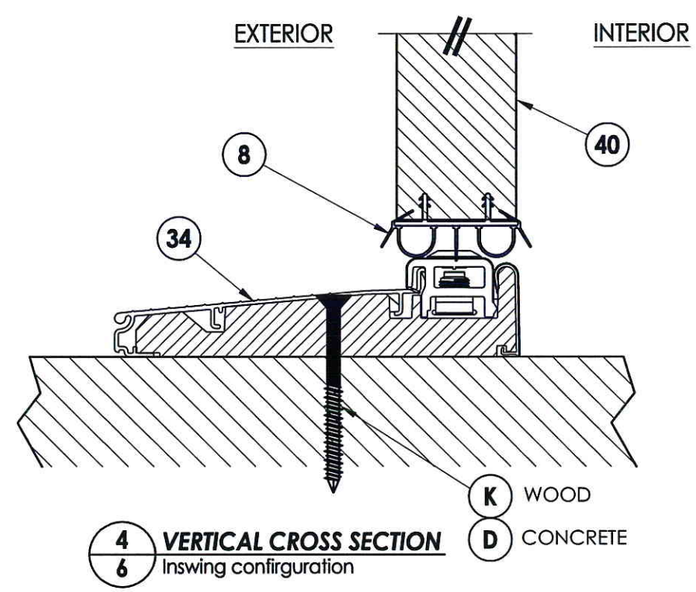

4/6 **VERTICAL CROSS SECTION**
Inswing confirguration

STATE OF TEXAS
LYNDON F. SCHMIDT
104123
LICENSED PROFESSIONAL ENGINEER

Documents Prepared By: Lyndon F. Schmidt, P.E.
TEXAS P.E. #104123

RW BUILDING CONSULTANTS, INC.
P.O. Box 230 Valrico FL. 33595
Phone No.: 813.659.9197

TEXAS BOARD OF PROFESSIONAL ENGINEERS
CERTIFICATE OF REGISTRATION # F-11852

PRODUCT: PLASTPRO INC. FIBERGLASS DOOR
PART OR ASSEMBLY: VERTICAL CROSS SECTIONS

NO.	DATE	BY

REVISIONS

DATE: 12/04/12
SCALE: N.T.S.
DWG. BY: JK
CHK. BY: LFS
DRAWING NO.: TX-4288
SHEET 6 OF 9

© 2012 R.W. BUILDING CONSULTANTS INC.

R:\A - Projects\Project Folders\Proj 1601 - 1700\PF 1662\D. RWBC Drawings\TX-4287-88.dwg, 2-6

NOTE:
1. Spacing for item L: 3" from each end.

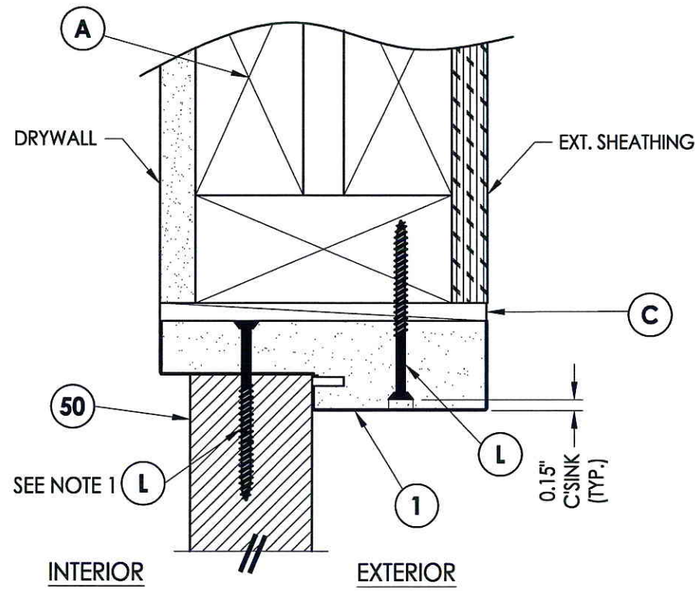

1/7 **VERTICAL CROSS SECTION**
Inswing shown - Outswing also approved

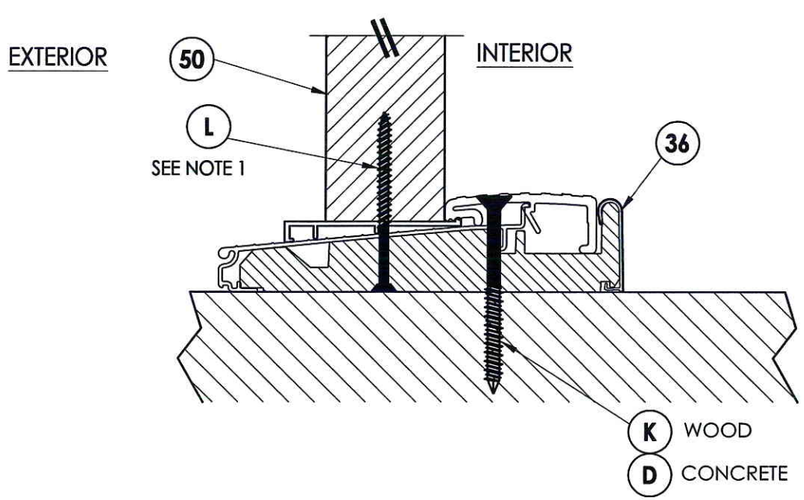

2/7 **VERTICAL CROSS SECTION**
Outswing shown

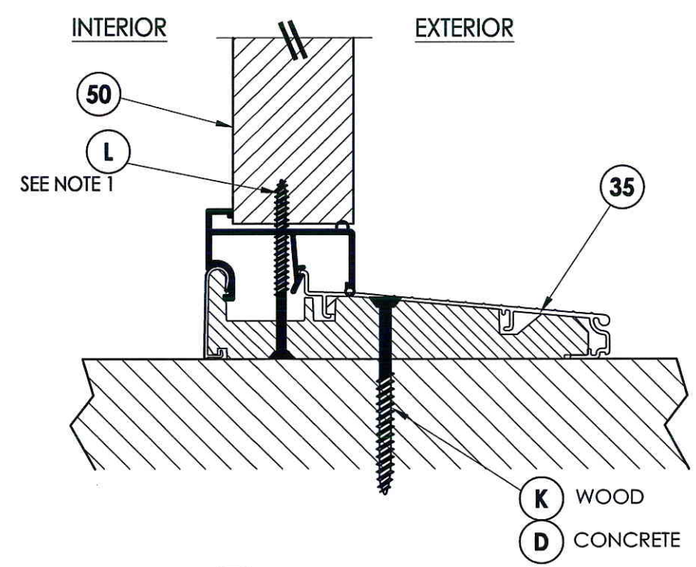

3/7 **VERTICAL CROSS SECTION**
Inswing shown

STATE OF TEXAS
LYNDON F. SCHMIDT
104123
LICENSED PROFESSIONAL ENGINEER
12-5-12

Documents Prepared By: Lyndon F. Schmidt, P.E.
TEXAS P.E. #104123

RW BUILDING CONSULTANTS, INC.
P.O. Box 230 Valrico FL. 33595
Phone No.: 813.659.9197

TEXAS BOARD OF PROFESSIONAL ENGINEERS
CERTIFICATE OF REGISTRATION # F-11852

PRODUCT: PLASTPRO INC. FIBERGLASS DOOR
PART OR ASSEMBLY: VERTICAL CROSS SECTIONS

NO.	DATE	REVISIONS	BY

DATE: 12/04/12
SCALE: N.T.S.
DWG. BY: JK
CHK. BY: LFS
DRAWING NO.: TX-4288
SHEET 7 OF 9

© 2012 R.W. BUILDING CONSULTANTS INC.

R:\A - Projects\Project Folders\Proj 1601 - 1700\PF 1662\D. RWBC Drawings\TX-4287-88.dwg, 2-7

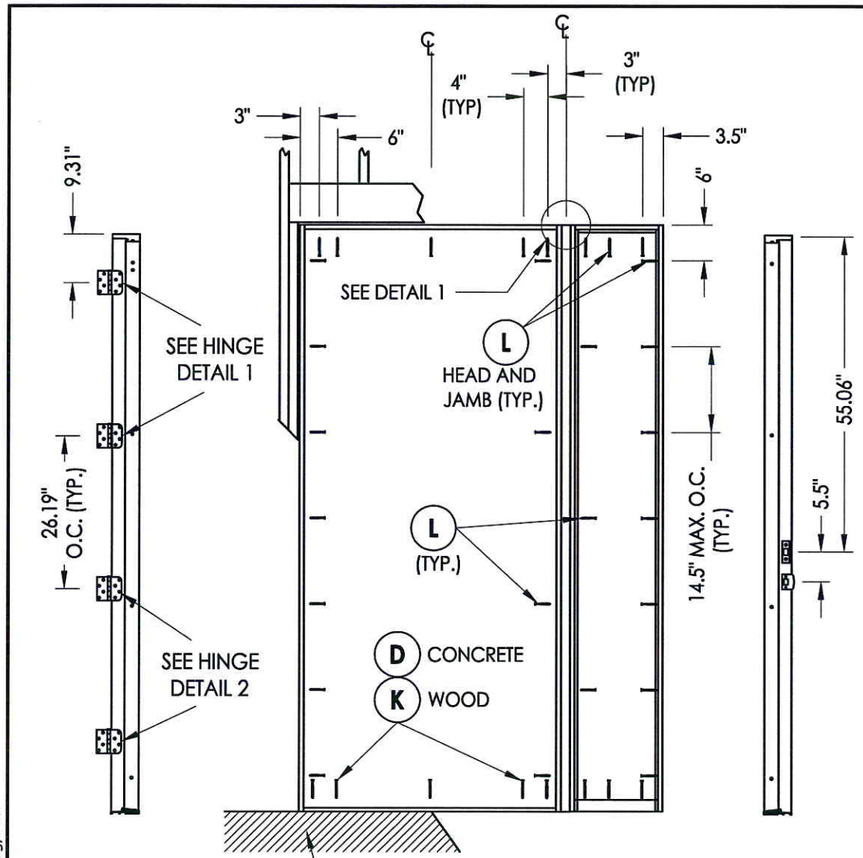

HINGE JAMB **FRAME ANCHORING** OX **STRIKE MULLION**

FLOOR SUBSTRATE MATERIAL (TYP.)
CONCRETE (MIN. 3000 PSI)
WOOD (G >= 0.42)

2X FRAMING TO BE DESIGNED BY THE ENGINEER OR ARCHITECT OF RECORD BASED ON WIND LOADS AND THE CLADDING BEING USED (TYP.).

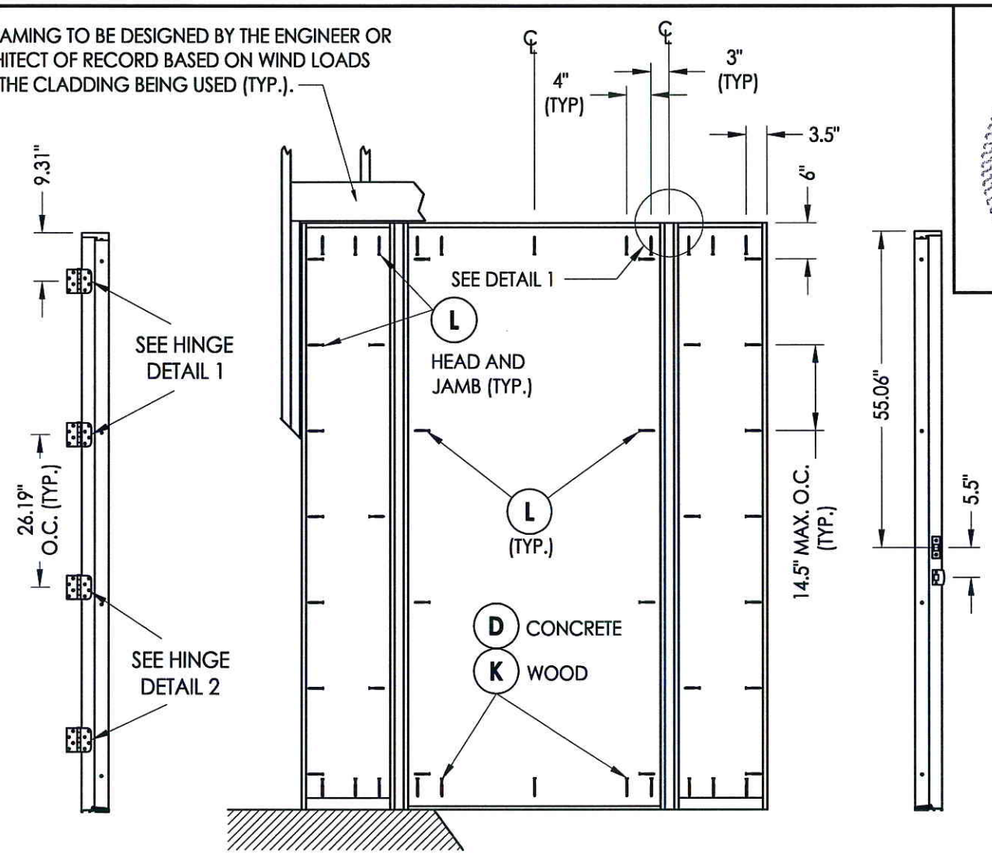

HINGE MULLION **FRAME ANCHORING** OXO **STRIKE MULLION**

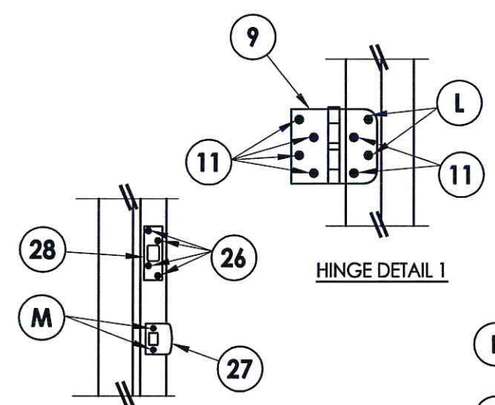

HINGE DETAIL 1

LATCH AND DEADBOLT DETAIL

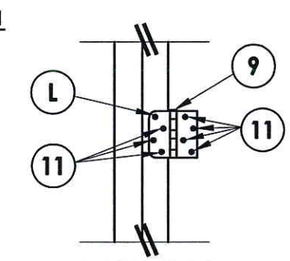

HINGE DETAIL 2

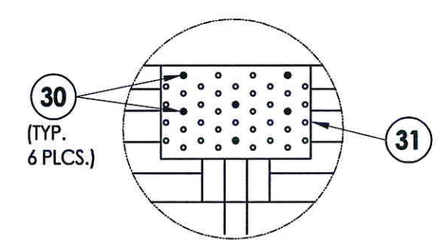

DETAIL 1

CONCRETE ANCHOR NOTES:

1. *Concrete anchor locations at the corners may be adjusted to maintain the min. edge distance to mortar joints.*
2. *Concrete anchor locations noted as "MAX. ON CENTER" must be adjusted to maintain the min. edge distance to mortar joints, additional concrete anchors may be required to ensure the "MAX. ON CENTER" dimension are not exceeded.*
3. *Concrete anchor table:*

ANCHOR TYPE	ANCHOR SIZE	MIN. EMBEDMENT	MIN. CLEARANCE TO MASONRY EDGE	MIN. CLEARANCE TO ADJACENT ANCHOR
ITW TAPCON®	1/4"	1-3/4"	2-1/2"	3"
ELCO ULTRACON®	1/4"	1-3/4"	1"	3"

STATE OF TEXAS
LYNDON F. SCHMIDT
104123
LICENSED PROFESSIONAL ENGINEER
12-5-12

Documents Prepared By: Lyndon F. Schmidt, P.E.
TEXAS P.E. #104123
RW BUILDING CONSULTANTS, INC.
P.O. Box 230 Valrico FL. 33595
Phone No.: 813.659.9197
TEXAS BOARD OF PROFESSIONAL ENGINEERS
CERTIFICATE OF REGISTRATION # F-11852

PRODUCT: *PLASTPRO FIBERGLASS DOOR*

PART OR ASSEMBLY: *FRAME ANCHORING*

NO.	DATE	BY

REVISIONS

DATE: 12/04/12
SCALE: N.T.S.
DWG. BY: JK
CHK. BY: LFS
DRAWING NO.: TX-4288
SHEET 8 OF 9

© 2012 R.W. BUILDING CONSULTANTS INC.

R:\A - Projects\Project Folders\Proj 1601 - 1700\PF 1662\D. RWBC Drawings\TX-4287-88.dwg, 2-8

BILL OF MATERIALS

ITEM #	DESCRIPTION	MATERIAL
A	2X FRAMING (G >= 0.42)	WOOD
C	1/4" MAX. SHIM SPACE	-
D	1/4" PFH ELCO OR ITW CONCRETE SCREW (1-3/4" MIN. EMB.)	STEEL
K	#10 X 3" PFH WOOD SCREW (1-1/2" MIN. EMB.)	STEEL
L	#10 X 2-1/2" PFH WOOD SCREW (1.15" MIN. EMB.)	STEEL
M	#8 X 1-1/2" PFH WOOD SCREW	STEEL
1	POLY FIBER JAMB	POLY FIBER
3	EXT. FRAME	ALUM
4	INT. FRAME	ALUM
5	#8 X 1-3/4" PPH SMS	STEEL
7	WEATHERSTRIP	FOAM
8	DOOR BOTTOM SWEEP	VINYL
9	4" X 4" BUTT HINGE	STEEL
11	#9 X 3/4" PFH WOOD SCREW	STEEL
12	DOW 995 STRUCTURAL SILICONE	SILICONE
13	GLAZING COMPOUND (READI-SEAL)	SILICONE
26	#8 X 3" PFH WOOD SCREW	STEEL
27	LATCH STRIKE PLATE	STEEL
28	DEADBOLT STRIKE PLATE (SECURITY)	STEEL
30	#6 X 3/4" PFH WOOD SCREW	STEEL
31	TIE PLATE	STEEL
33	OUTSWING THRESHOLD	ALUM / COMP
34	INSWING ADJUSTABLE THRESHOLD	ALUM / COMP
35	INSWING ADJUSTABLE THRESHOLD w/ SIDELITE ADAPTER	ALUM / COMP
36	OUTSWING THRESHOLD w/ SIDELITE ADAPTER	ALUM / COMP
40	DOOR PANEL - SEE DOOR PANEL DETAIL SHEET FOR CONSTRUCTION DETAILS	-
46	ADA THRESHOLD	ALUM
50	SIDELITE PANEL - SEE SIDELITE PANEL DETAIL SHEET FOR CONSTRUCTION DETAILS	-
88	2X REINFORCEMENT (G >= 0.55)	WOOD

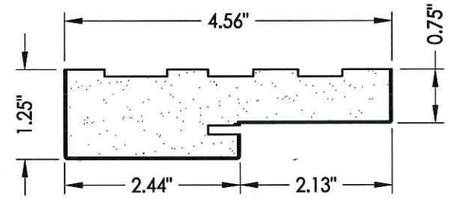

1 POLY FIBER JAMB

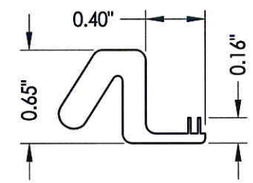

7 WEATHERSTRIP
Endura Force 5

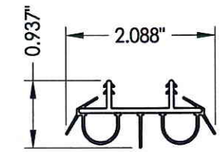

8 DOOR BOTTOM SWEEP

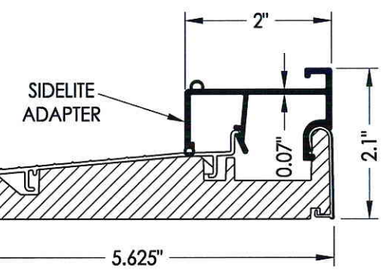

35 INSWING THRESHOLD w/ SIDELITE ADAPTER
Endura

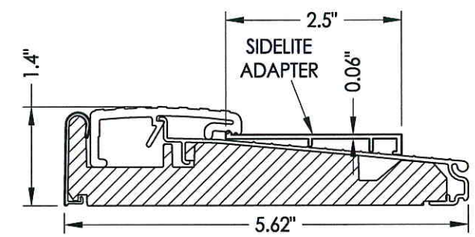

36 OUTSWING THRESHOLD w/ SIDELITE ADAPTER
Endura

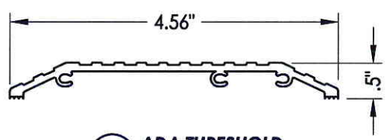

46 ADA THRESHOLD
DLP

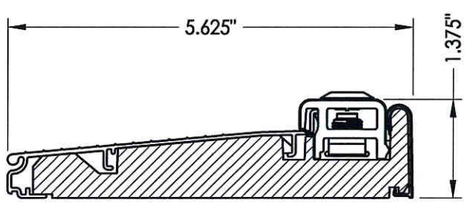

34 ADJUSTABLE INSWING THRESHOLD
Endura

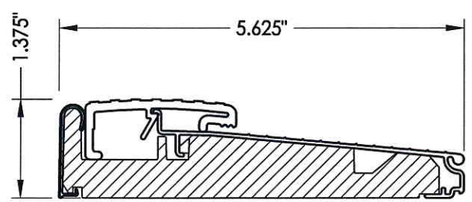

33 OUTSWING THRESHOLD
Endura

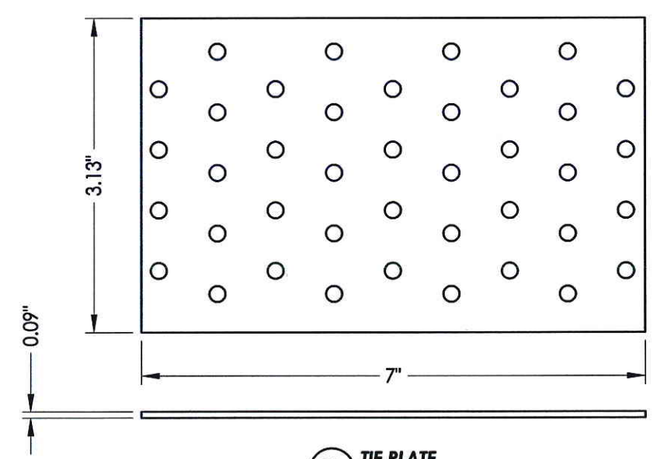

31 TIE PLATE

STATE OF TEXAS
LYNDON F. SCHMIDT
104123
LICENSED PROFESSIONAL ENGINEER
12-5-12

Documents Prepared By: Lyndon F. Schmidt, P.E.
TEXAS P.E. #104123
RW BUILDING CONSULTANTS, INC.
P.O. Box 230 Valrico FL. 33595
Phone No.: 813.659.9197
TEXAS BOARD OF PROFESSIONAL ENGINEERS
CERTIFICATE OF REGISTRATION # F-11852

PRODUCT: PLASTPRO INC. FIBERGLASS DOOR

PART OR ASSEMBLY: BILL OF MATERIALS AND COMPONENTS

NO.	DATE	REVISIONS	BY

DATE: 12/04/12
SCALE: N.T.S.
DWG. BY: JK
CHK. BY: LFS
DRAWING NO.: TX-4288
SHEET 9 OF 9

© 2012 R.W. BUILDING CONSULTANTS INC.

R:\A - Projects\Project Folders\Proj 1601 - 1700\PF 1662\D. RWBC Drawings\TX-4287-88.dwg, 2-9