TAYLOR Entrance Systems™

AMERICA'S DOORMAKER

631 N. FIRST ST. WEST BRANCH, MI 48661

TIMBERLINE DELUXE

OPAQUE FIBERGLASS SINGLE DOOR

INSWING / OUTSWING

"IMPACT"

EVALUATED FOR USE IN THE STATE OF TEXAS

The Fiberglass door described herein complies with the 2006 International Residential Code (IRC), Sections R301 & R613 and the 2006 International Building Code (IBC), Sections 1405.12, 1609, 1714.5, 2403 and 2404 (including Texas revisions) subject to the following conditions:

1. Anchors shall be as listed and spaced as shown in the details. Anchor embedment to base material shall be beyond wall dressing or stucco.
2. When used in areas requiring wind-borne debris protection (Seaward and Inland I areas), this product complies with Section R301.2.1.2 of the IRC and Section 1609.1.2 of the IBC and does not require impact protection. This product meets missile level "D" and includes Wind Zone 4 as defined in ASTM E 1996.
3. Allowable design pressure requirements must be equal to or less than the design pressure rating shown in the design pressure chart, sheet 1 of this drawing.
4. Conditions not covered by this drawing are subject to further engineering analysis.

TABLE OF CONTENTS

SHEET#	DESCRIPTION
1	Typical elevations, design pressures & general notes
2	Door panel details
3	Horizontal cross sections
4	Vertical cross sections
5	Frame anchoring
6	Bill of materials and components

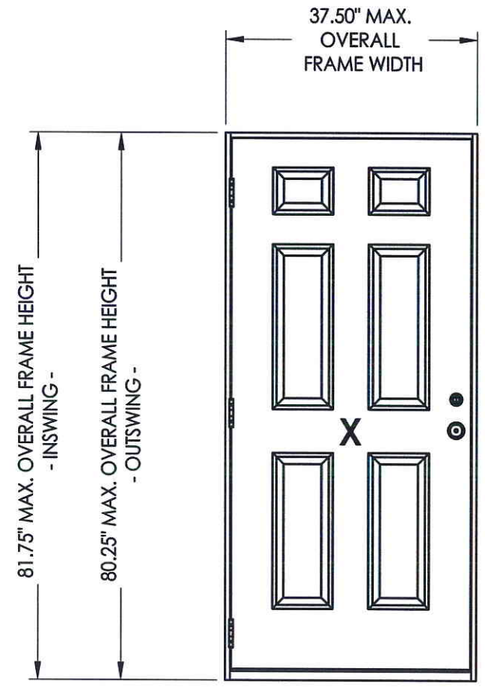

CONFIGURATION	MAX. FRAME DIMENSION	DESIGN PRESSURE (PSF) INSWING		DESIGN PRESSURE (PSF) OUTSWING	
		POSITIVE	NEGATIVE	POSITIVE	NEGATIVE
X	37.50" x 81.75"	+100.0	-100.0	+100.0	-100.0

STATE OF TEXAS
LYNDON F. SCHMIDT
104123
LICENSED PROFESSIONAL ENGINEER

Documents Prepared By: Lyndon F. Schmidt, P.E.
TEXAS P.E. #104123

RW BUILDING CONSULTANTS, INC.
P.O. Box 230 Valrico FL 33595
Phone No.: 813.659.9197

TEXAS BOARD OF PROFESSIONAL ENGINEERS
CERTIFICATE OF REGISTRATION # F-11852

PRODUCT: TAYLOR FIBERGLASS DOOR

PART OR ASSEMBLY: TYPICAL ELEVATION, DESIGN PRESSURES & GENERAL NOTES

REVISIONS

NO.	DATE	BY

DATE: 11/26/14
SCALE: N.T.S.
DWG. BY: JK
CHK. BY: LFS
DRAWING NO.: TX-4512
SHEET 1 OF 6

© 2014 R.W. BUILDING CONSULTANTS INC.

R:\Clients\Taylor Permanent\Texas Dept of Ins\TDI - DR 606 6'8 & 8'0 Sgl Opaque FG Doors Impact\Drawings\Current\TX-4512-13.dwg, TX-4512

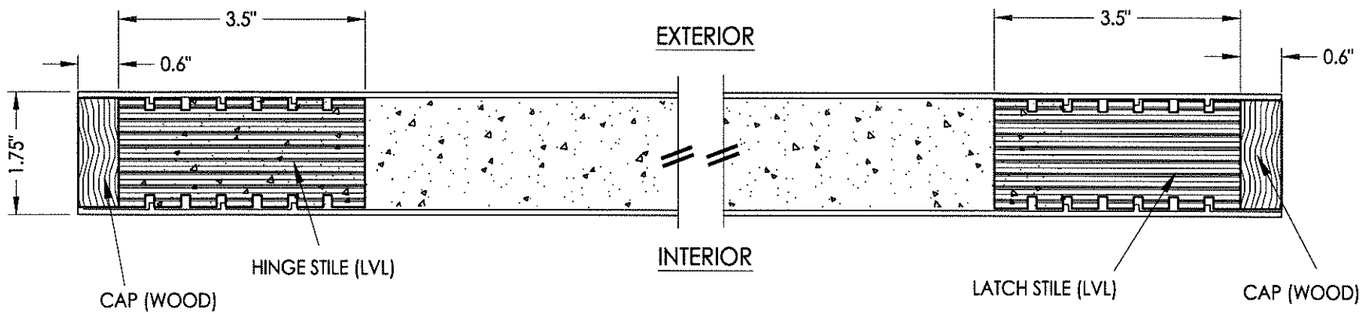

1/2 **HORIZONTAL CROSS SECTION**

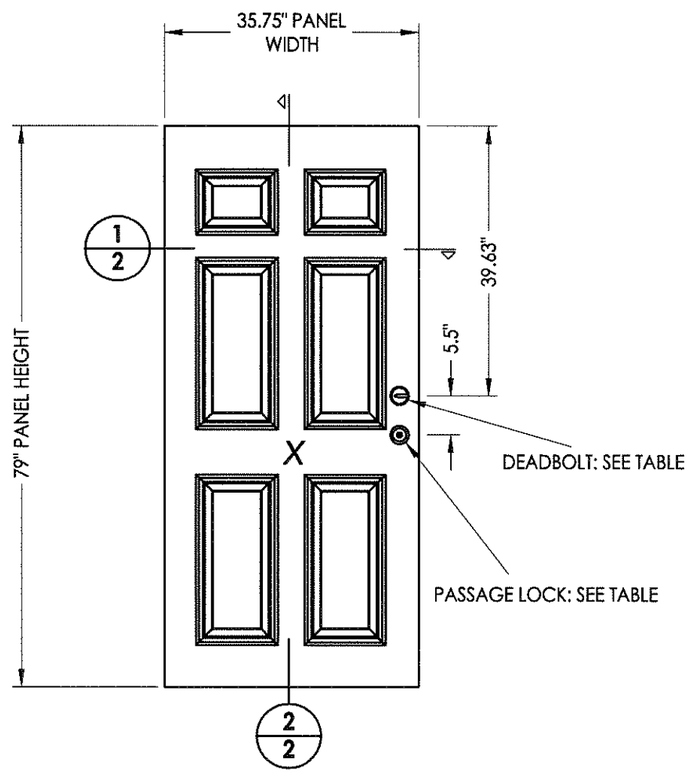

40 **DOOR PANEL**
Taylor Door
w/ Mastergrain Fiberglass skins

HARDWARE TABLE		
MANUFACTURER	MODEL	
KWIKSET	KNOB:	KWIKSET SIGNATURE SERIES
	DEADBOLT:	KWIKSET SIGNATURE SERIES (980)
SCHLAGE	KNOB:	"F" SERIES
	DEADBOLT:	"B" SERIES

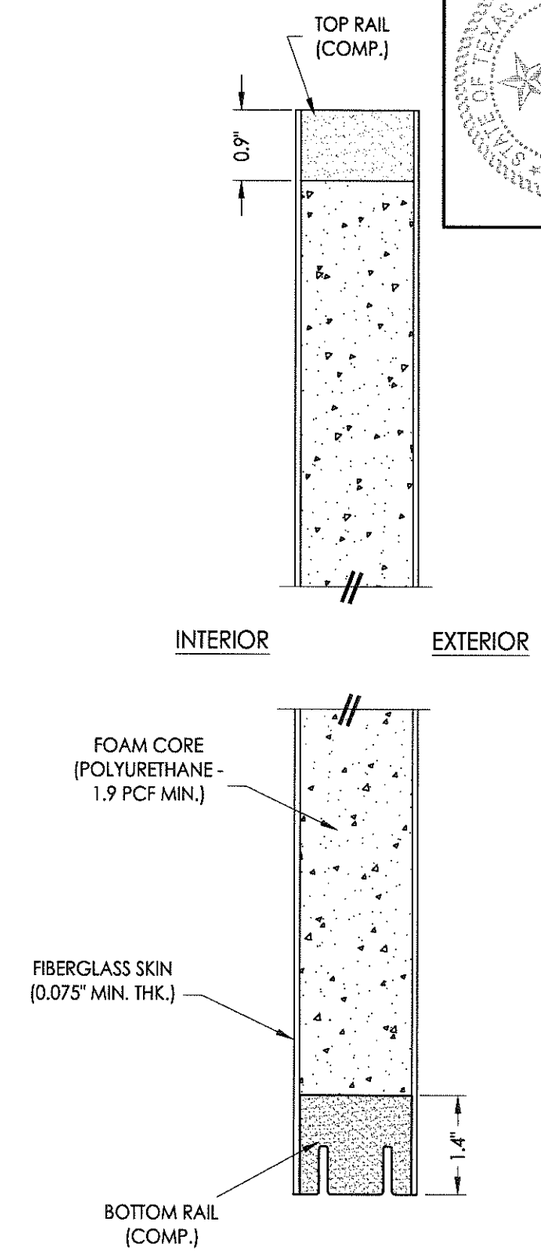

2/2 **VERTICAL CROSS SECTION**

STATE OF TEXAS
LYNDON F. SCHMIDT
104123
LICENSED PROFESSIONAL ENGINEER
11-26-14

Documents Prepared By: Lyndon F. Schmidt, P.E.
TEXAS P.E. #104123
R.W. BUILDING CONSULTANTS, INC.
P.O. Box 230 Valrico FL. 33595
Phone No.: 813.859.9197
TEXAS BOARD OF PROFESSIONAL ENGINEERS
CERTIFICATE OF REGISTRATION # F-11852

PRODUCT: TAYLOR FIBERGLASS DOOR

PART OR ASSEMBLY: DOOR PANEL DETAILS

NO.	DATE	REVISIONS	BY

DATE: 11/26/14
SCALE: N.T.S.
DWG. BY: JK
CHK. BY: LFS
DRAWING NO.: TX-4512
SHEET 2 OF 6

© 2014 R.W. BUILDING CONSULTANTS INC.

R:\Clients\Taylor Permanent\Texas Dept of Ins\TDI - DR 606 6'8 & 8'0 Sgl Opaque FG Doors Impact\Drawings\Current\TX-4512-13.dwg, 2

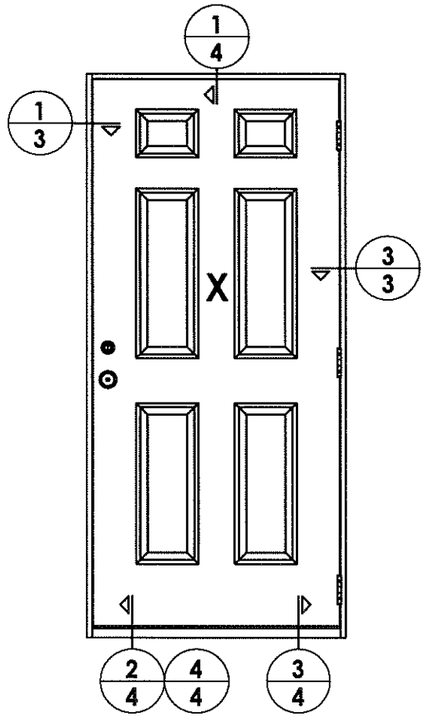

ELEVATION (X)

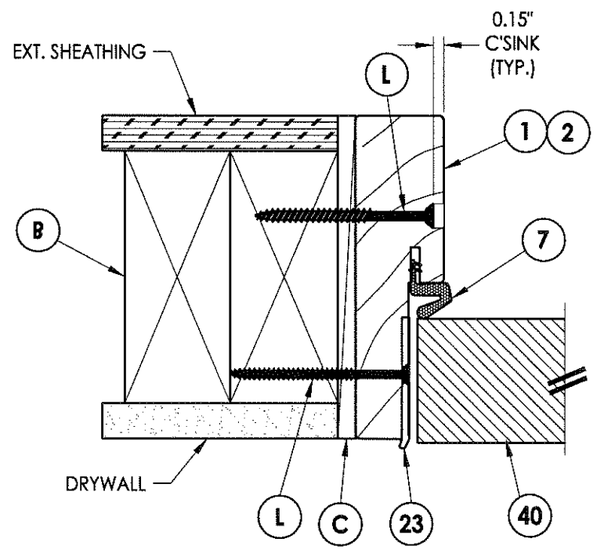

EXTERIOR

INTERIOR

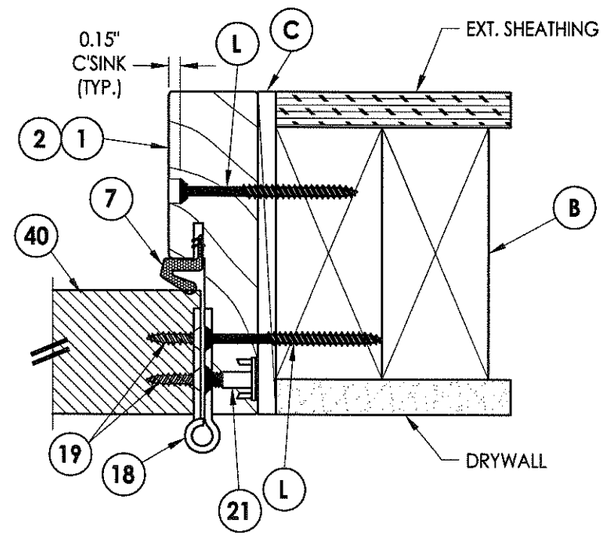

1/3 HORIZONTAL CROSS SECTION
Inswing shown - outswing also approved

3/3 HORIZONTAL CROSS SECTION
Inswing shown - outswing also approved

STATE OF TEXAS
LYNDON F. SCHMIDT
104123
LICENSED PROFESSIONAL ENGINEER
11-26-14

Documents Prepared By: Lyndon F. Schmidt, P.E.
TEXAS P.E. #104123

RW BUILDING CONSULTANTS, INC.
P.O. Box 230 Valrico FL. 33595
Phone No.: 813.659.9197

TEXAS BOARD OF PROFESSIONAL ENGINEERS
CERTIFICATE OF REGISTRATION # F-11852

PRODUCT: TAYLOR FIBERGLASS DOOR

PART OR ASSEMBLY: HORIZONTAL CROSS SECTIONS

NO.	DATE	BY

REVISIONS

DATE: 11/26/14
SCALE: N.T.S.
DWG. BY: JK
CHK. BY: LFS
DRAWING NO.: TX-4512
SHEET 3 OF 6

© 2014 R.W. BUILDING CONSULTANTS INC.

R:\Clients\Taylor Permanent\Texas Dept of Ins\TDI - DR 606 6'8 & 8'0 Sgl Opaque FG Doors Impact\Drawings\Current\TX-4512-13.dwg, 3

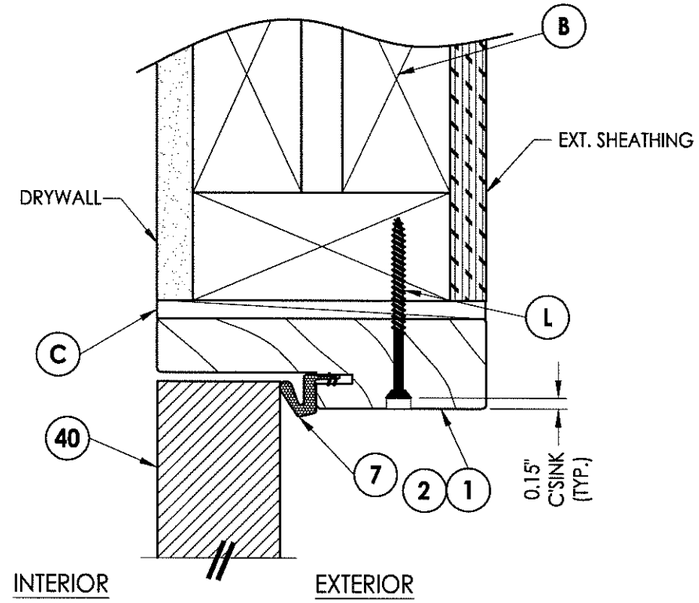

1/4 **VERTICAL CROSS SECTION**
Inswing shown - outswing also approved

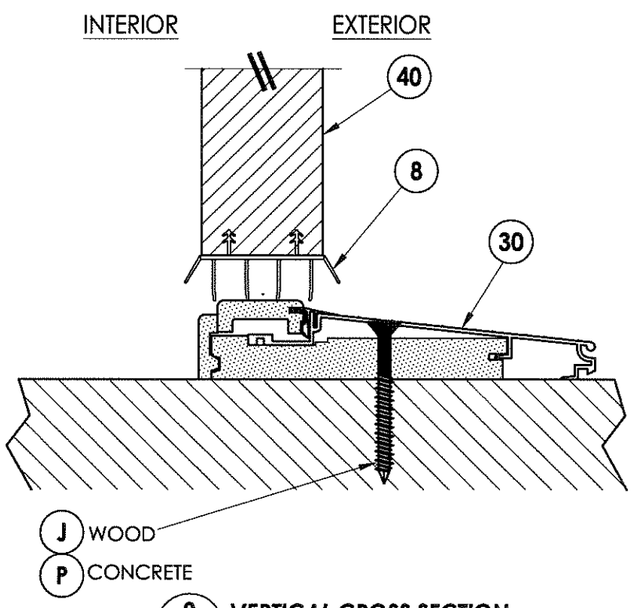

2/4 **VERTICAL CROSS SECTION**
Inswing configuration

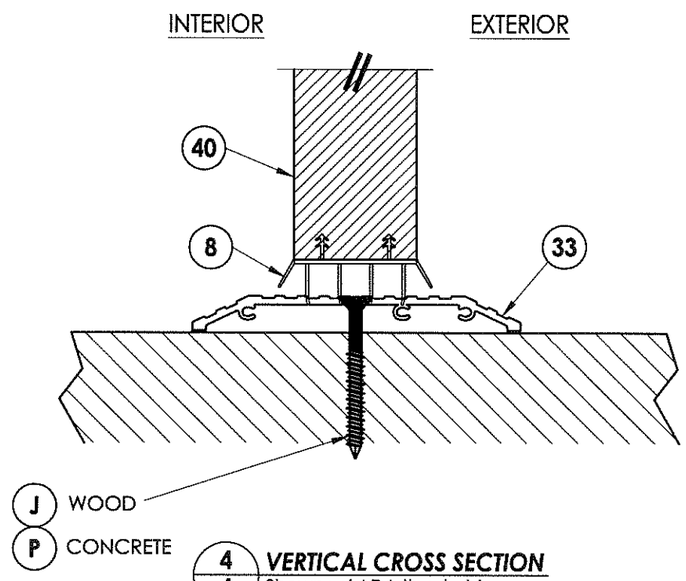

4/4 **VERTICAL CROSS SECTION**
Shown w/ ADA threshold

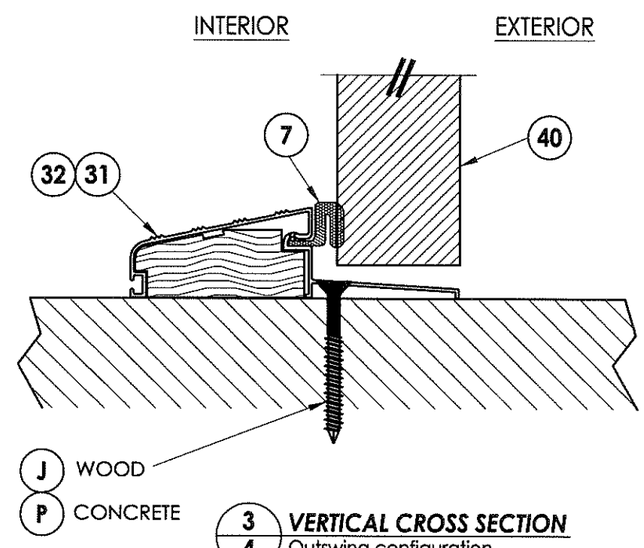

3/4 **VERTICAL CROSS SECTION**
Outswing configuration

STATE OF TEXAS
LYNDON F. SCHMIDT
104123
LICENSED PROFESSIONAL ENGINEER

11.26.14

Documents Prepared By: Lyndon F. Schmidt, P.E.
TEXAS P.E. #104123

RW BUILDING CONSULTANTS, INC.
P.O. Box 230 Valrico FL 33595
Phone No.: 813.659.9197

TEXAS BOARD OF PROFESSIONAL ENGINEERS
CERTIFICATE OF REGISTRATION # F-11852

PRODUCT: TAYLOR FIBERGLASS DOOR

PART OR ASSEMBLY: VERTICAL CROSS SECTIONS

NO.	DATE	BY

REVISIONS

DATE: 11/26/14
SCALE: N.T.S.
DWG. BY: JK
CHK. BY: LFS
DRAWING NO.: TX-4512
SHEET 4 OF 6

© 2014 R.W. BUILDING CONSULTANTS INC.

R:\Clients\Taylor Permanent\Texas Dept of Ins\TDI - DR 606 6'8 & 8'0 Sgl Opaque FG Doors Impact\Drawings\Current\TX-4512-13.dwg, 4

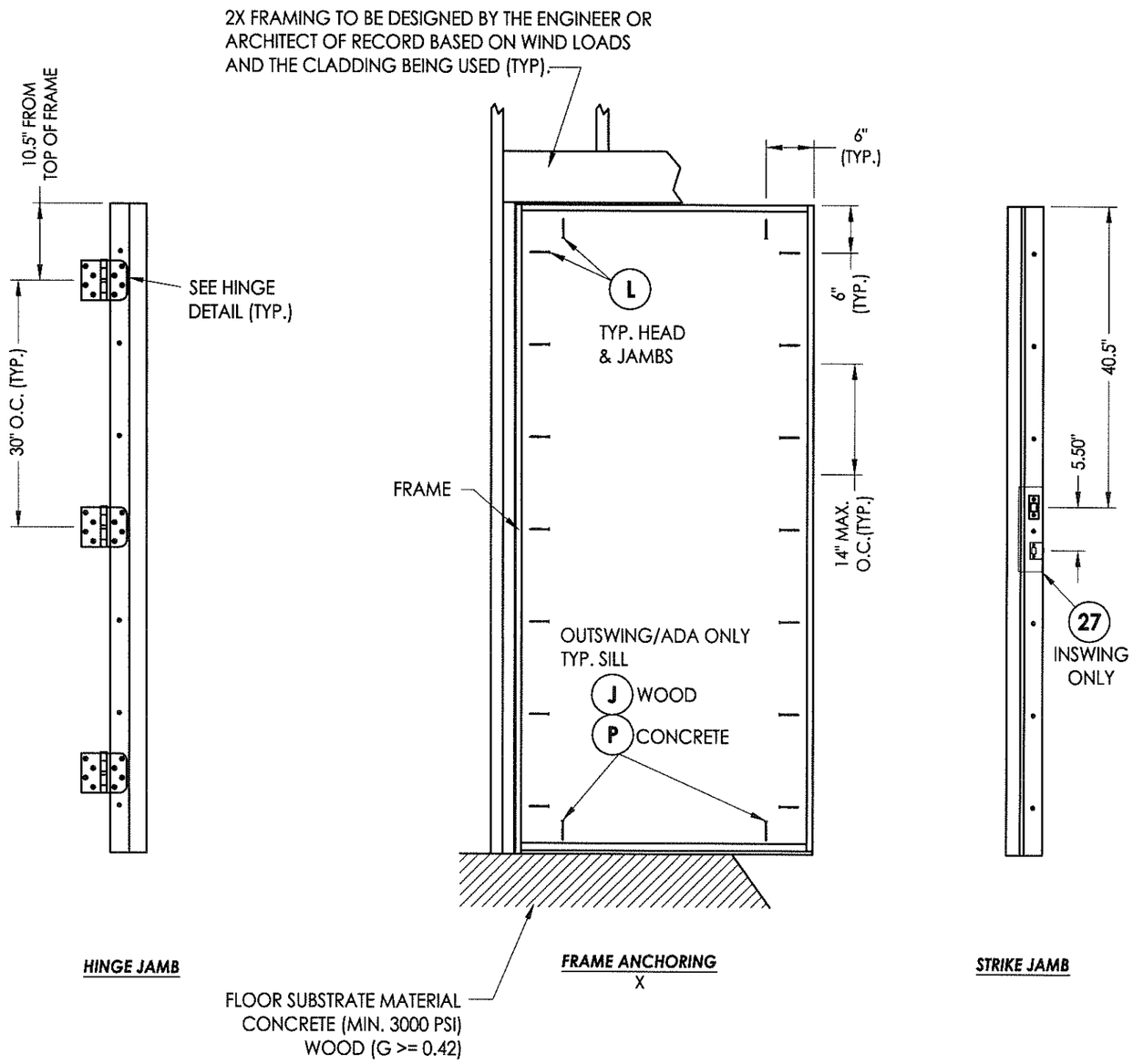

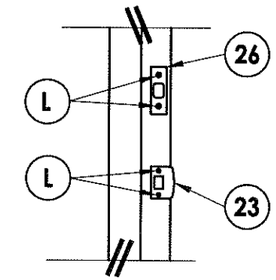

LATCH & DEADBOLT DETAIL

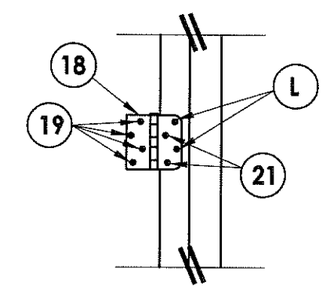

HINGE DETAIL

STATE OF TEXAS
LYNDON F. SCHMIDT
104123
REGISTERED PROFESSIONAL ENGINEER
11-26-14

Documents Prepared By: Lyndon F. Schmidt, P.E.
TEXAS P.E. #104123
RW BUILDING CONSULTANTS, INC.
P.O. Box 230 Valrico FL. 33595
Phone No.: 813.659.9197
TEXAS BOARD OF PROFESSIONAL ENGINEERS
CERTIFICATE OF REGISTRATION # F-11852

PRODUCT: TAYLOR FIBERGLASS DOOR

PART OR ASSEMBLY: FRAME ANCHORING

NO.	DATE	BY

REVISIONS

DATE: 11/26/14
SCALE: N.T.S.
DWG. BY: JK
CHK. BY: LFS
DRAWING NO.: TX-4512
SHEET 5 OF 6

© 2014 R.W. BUILDING CONSULTANTS INC.

R:\Clients\Taylor Permanent\Texas Dept of Ins\TDI - DR 606 6'8 & 8'0 Sgl Opaque FG Doors Impact\Drawings\Current\TX-4512-13.dwg, 5

BILL OF MATERIALS

ITEM #	DESCRIPTION	MATERIAL
B	2X FRAMING (G >= 0.42)	WOOD
C	1/4" MAX. SHIM SPACE	-
J	#10 X 3 PFH WOOD SCREW	STEEL
L	#10 X 2-1/2" PFH WOOD SCREW	STEEL
P	1/4" PFH ELCO OR ITW CONCRETE SCREW (1-3/4" MIN. EMBEDMENT)	STEEL
1	JAMB - FINGERJOINT PINE	WOOD
2	JAMB - POLY FIBER	POLY FIBER
7	WEATHER STRIP (Q-LON)	FOAM
8	DOOR BOTTOM SWEEP	VINYL
18	4" X 4" HINGE	STEEL
19	#10 X 3/4" PFH WS	STEEL
21	#10 X 3/4" PFH WS (Wood Jamb) #10-24 X 5/8" M.S. w/ 1/2" STAFAST INSERT P/N D102413 (Wood or Poly Fiber Jamb) #10-24 X 5/8" M.S. w/ 3/8" STAFAST PRONG TEE NUT (Wood or Poly Fiber Jamb)	STEEL
23	LATCH STRIKE PLATE	STEEL
25	#8 X 2-1/2" PFH WOOD SCREW	STEEL
26	DEADBOLT STRIKE PLATE	STEEL
27	REINFORCEMENT PLATE	STEEL
30	INSWING THRESHOLD	ALUM/COMP
31	OUTSWING THRESHOLD	ALUM/WOOD
32	OUTSWING THRESHOLD	ALUM/WOOD
33	ADA THRESHOLD	ALUM
40	DOOR PANEL - SEE DOOR PANEL DETAIL SHEET FOR CONSTRUCTION DETAILS	-

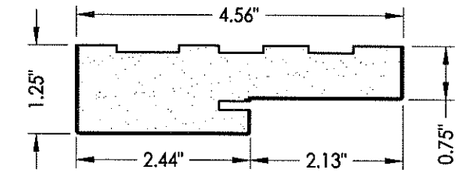

1 POLY FIBER JAMB

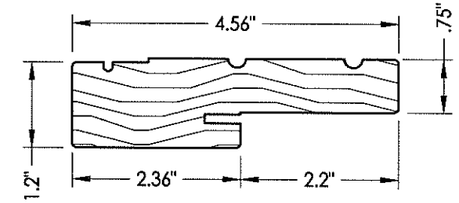

2 WOOD JAMB

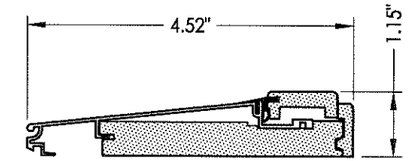

30 INSWING THRESHOLD
By Imperial

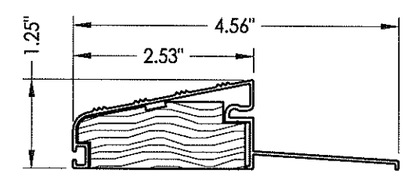

31 OUTSWING THRESHOLD
QOSH by DLP

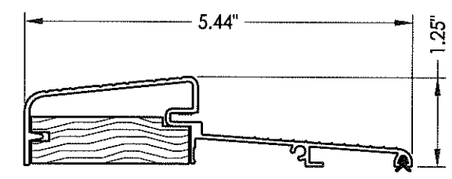

32 OUTSWING THRESHOLD
By Combo

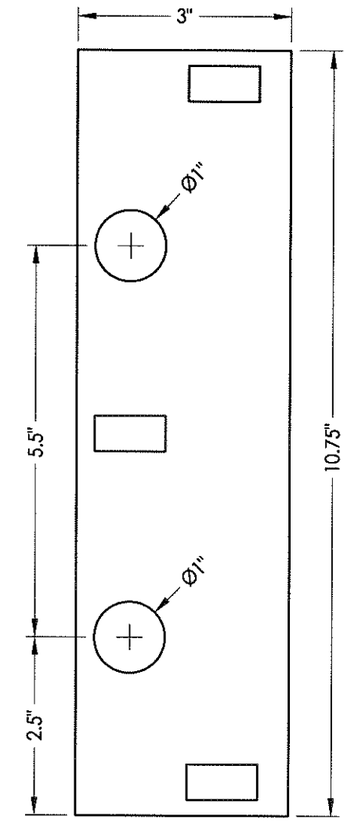

27 REINFORCEMENT PLATE
16 GA.
(Inswing only)

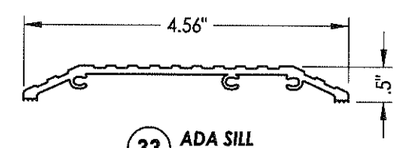

33 ADA SILL

CONCRETE ANCHOR NOTES:

1. *Concrete anchor locations at the corners may be adjusted to maintain the min. edge distance to mortar joints.*
2. *Concrete anchor locations noted as "MAX. ON CENTER" must be adjusted to maintain the min. edge distance to mortar joints, additional concrete anchors may be required to ensure the "MAX. ON CENTER" dimension are not exceeded.*
3. *Concrete anchor table:*

ANCHOR TYPE	ANCHOR SIZE	MIN. EMBEDMENT	MIN. CLEARANCE TO MASONRY EDGE	MIN. CLEARANCE TO ADJACENT ANCHOR
ITW TAPCON®	1/4"	1-3/4"	2-1/2"	3"
ELCO ULTRACON®	1/4"	1-3/4"	1"	3"

STATE OF TEXAS
LYNDON F. SCHMIDT
104123
LICENSED
PROFESSIONAL ENGINEER
11-26-14

Documents Prepared By: Lyndon F. Schmidt, P.E.
TEXAS P.E. #104123

RW BUILDING CONSULTANTS, INC.
P.O. Box 230 Valrico FL 33595
Phone No.: 813.659.9197

TEXAS BOARD OF PROFESSIONAL ENGINEERS
CERTIFICATE OF REGISTRATION # F-11852

PRODUCT: TAYLOR FIBERGLASS DOOR

PART OR ASSEMBLY: BILL OF MATERIALS AND COMPONENTS

NO.	DATE	REVISIONS	BY

DATE: 11/26/14
SCALE: N.T.S.
DWG. BY: JK
CHK. BY: LFS
DRAWING NO.: TX-4512
SHEET 6 OF 6

© 2014 R.W. BUILDING CONSULTANTS INC.

R:\Clients\Taylor Permanent\Texas Dept of Ins\TDI - DR 606 6'8 & 8'0 Sgl Opaque FG Doors Impact\Drawings\Current\TX-4512-13.dwg, 6