REVISIONS			
REV	DESCRIPTION	DATE	APPROVED

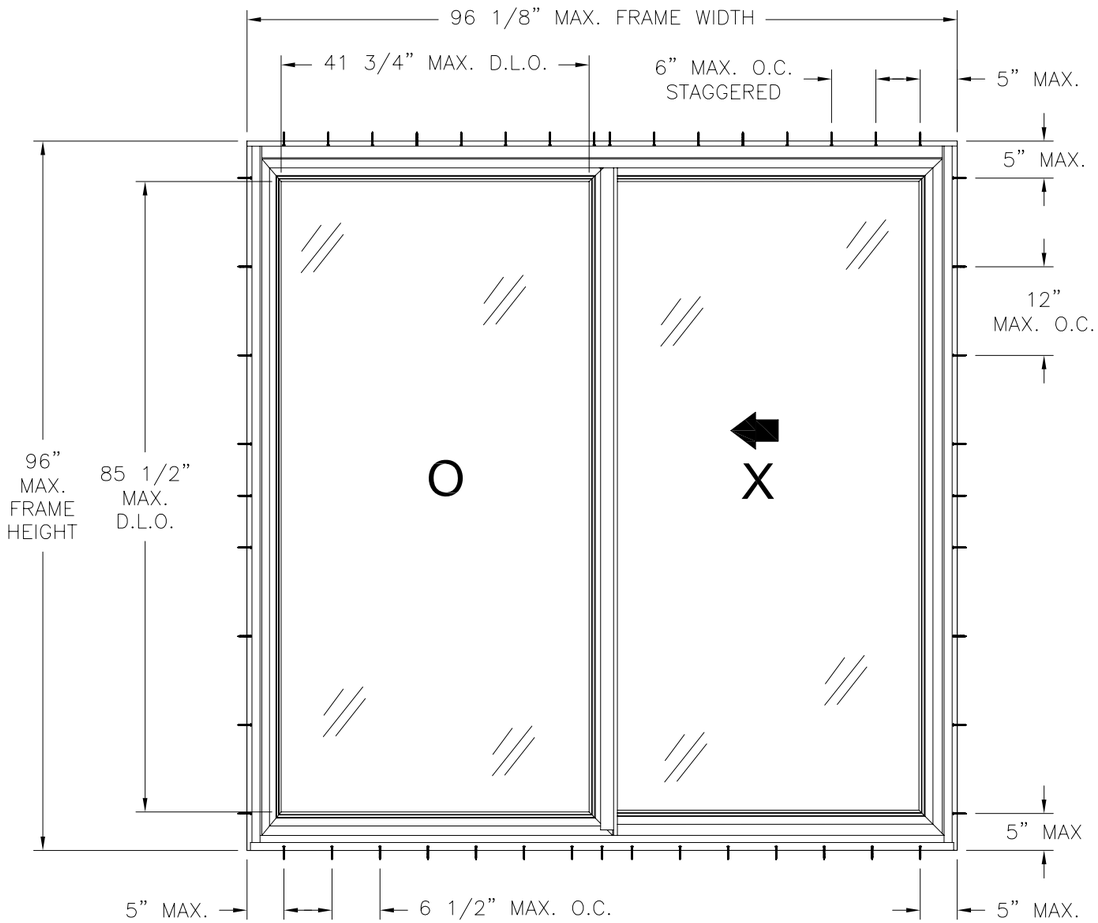

REINFORCED VINYL SLIDING GLASS DOOR

EXTERIOR VIEW

DESIGN PRESSURE RATING	*IMPACT RATING*
±55PSF	*LARGE AND SMALL MISSILE IMPACT*

MISSILE LEVEL D, WIND ZONE 4

NOTES:

1) THE PRODUCT SHOWN HEREIN IS DESIGNED AND MANUFACTURED TO COMPLY WITH REQUIREMENTS OF THE 2006 IBC, 2006 IRC WITH TEXAS STATE MODIFICATIONS.
2) WOOD FRAMING AND MASONRY OPENING TO BE DESIGNED AND ANCHORED TO PROPERLY TRANSFER ALL LOADS TO STRUCTURE. FRAMING AND MASONRY OPENING IS THE RESPONSIBILITY OF THE ARCHITECT OR ENGINEER OF RECORD.
3) 1X BUCK OVER MASONRY/CONCRETE IS OPTIONAL. WHERE 1X BUCK IS NOT USED DISSIMILAR MATERIALS MUST BE SEPARATED WITH APPROVED COATING OR MEMBRANE. SELECTION OF COATING OR MEMBRANE IS THE RESPONSIBILITY OF THE ARCHITECT OR ENGINEER OF RECORD.
4) ALLOWABLE STRESS INCREASE OF 1/3 WAS NOT USED IN THE DESIGN OF THE PRODUCT SHOWN HEREIN. WIND LOAD DURATION FACTOR Cd=1.6 WAS USED FOR WOOD ANCHOR CALCULATIONS.
5) FRAME MATERIAL: EXTRUDED RIGID PVC.
6) UNITS MUST BE GLAZED PER ASTM E1300.
7) APPROVED IMPACT PROTECTIVE SYSTEM <u>IS NOT REQUIRED</u> FOR THIS PRODUCT IN WIND BORNE DEBRIS REGIONS.
8) SHIM AS REQUIRED AT EACH INSTALLATION ANCHOR WITH LOAD BEARING SHIM. SHIM WHERE SPACE OF 1/16" OR GREATER OCCURS. MAXIMUM ALLOWABLE SHIM STACK TO BE 1/4".
9) FOR ANCHORING INTO MASONRY/CONCRETE USE 3/16" TAPCONS WITH SUFFICIENT LENGTH TO ACHIEVE A 1 1/4" MINIMUM EMBEDMENT INTO SUBSTRATE WITH 2'' MINIMUM EDGE DISTANCE. LOCATE ANCHORS AS SHOWN IN ELEVATIONS AND INSTALLATION DETAILS.
10) FOR ANCHORING INTO WOOD FRAMING OR 2X BUCK USE #10 WOOD SCREWS WITH SUFFICIENT LENGTH TO ACHIEVE A 1 3/8" MINIMUM EMBEDMENT INTO SUBSTRATE. LOCATE ANCHORS AS SHOWN IN ELEVATIONS AND INSTALLATION DETAILS.
11) ALL FASTENERS TO BE CORROSION RESISTANT.
12) INSTALLATION ANCHORS SHALL BE INSTALLED IN ACCORDANCE WITH ANCHOR MANUFACTURER'S INSTALLATION INSTRUCTIONS, AND ANCHORS SHALL NOT BE USED IN SUBSTRATES WITH STRENGTHS LESS THAN THE MINIMUM STRENGTH SPECIFIED BELOW:
    A. WOOD – MINIMUM SPECIFIC GRAVITY OF G=0.42
    B. CONCRETE – MINIMUM COMPRESSIVE STRENGTH OF 3,192 PSI.
    C. MASONRY – STRENGTH CONFORMANCE TO ASTM C–90, GRADE N, TYPE 1 (OR GREATER).

SIGNED: 07/11/2011

TABLE OF CONTENTS

SHEET NO.	DESCRIPTION
1	ELEVATION, ANCHORING AND NOTES
2 – 3	BILL OF MATERIALS AND CROSS SECTIONS
4 – 5	INSTALLATION DETAILS

PROVIA DOOR, INC.
2150 STATE ROUTE 39 WEST
SUGARCREEK, OH 44681

REINFORCED VINYL SLIDING GLASS DOOR
STANDARD IMPACT RATED – 96 X 96
ELEVATION AND NOTES

DRAWN:	DWG NO.	REV
V.L.	08–01272	–
SCALE NTS	DATE 07/05/11	SHEET 1 OF 5

STATE OF TEXAS
LUIS R. LOMAS
101889
LICENSED
PROFESSIONAL ENGINEER

Luis R. Lomas P.E.
Texas No. 101889

PARTS LIST				
NO.	PART NUMBER	DESCRIPTION	MANUFACTURER	MATERIAL
1	7002	HEAD	P.H.TECH	RIGID PVC
2	9619	#8x2 3/4" FH QUADREX SCREW	P.H.TECH	STAINLESS STEEL
3	9550	WEATHERSTRIP	P.H.TECH	
4	7093	HEAD TRACK	P.H.TECH	RIGID PVC
5	7508.M	MOBILE HORIZONTAL RAIL	P.H.TECH	RIGID PVC
6	8933	SETTING BLOCK	P.H.TECH	
7	70-05A	STRUCTURAL ADHESIVE	BOSTIK	
8		GLASS		
9	7541	SHIM	P.H.TECH	RIGID PVC
10	9732	TANDEM WHEEL	P.H.TECH	
11	9790	ROLLING RAIL	P.H.TECH	ALUMINUM 6063-T5
12	7000	SILL	P.H.TECH	RIGID PVC
13	8723	SILL DUST COVER	P.H.TECH	RIGID PVC
14	9734	SILL PLUG	P.H.TECH	RIGID PVC
15	710	SILL WEATHERSEAL	P.H.TECH	
16	9808	WEEP HOLE COVER	P.H.TECH	RIGID PVC
17	9670	LEFT CAP FOR SILL ADAPTER	P.H.TECH	RIGID PVC
18	9671	RIGHT CAP FOR SILL ADAPTER	P.H.TECH	RIGID PVC
19	9867	#8x5/8" PH SELF DRILLING SCREW	P.H.TECH	STAINLESS STEEL
20	9991	OUTSIDE SILL CLADDING	P.H.TECH	ALUMINUM 6063-T5
21		SEALANT		
22	9569	INSECT STOP	P.H.TECH	RIGID PVC
23		SCREEN	P.H.TECH	
24	9876	#8x7/8" PH QUADREX SCREW	P.H.TECH	STAINLESS STEEL
25	7003	FIXED PANEL ANCHOR BLOCK	P.H.TECH	RIGID PVC
26	7508.F	FIXED HORIZONTAL RAIL	P.H.TECH	RIGID PVC
27	9667	SCREW CAP	P.H.TECH	RIGID PVC
28	5775	GLAZING BEAD	P.H.TECH	RIGID PVC
29	9853	FOAM PLUG	P.H.TECH	RIGID PVC
30	703	HEAD WEATHERSEAL	P.H.TECH	
31	8941	#8x1 1/4" PH QUADREX SCREW	P.H.TECH	STAINLESS STEEL
32	8940	FIXED PANEL SUPPORT	P.H.TECH	RIGID PVC
33	9560	WEATHER STRIP	P.H.TECH	
34	7004.G	LEFT JAMB	P.H.TECH	RIGID PVC
35	9571	WEATHER STRIP	P.H.TECH	
36	7517.F	FIXED PANEL SIDELITE	P.H.TECH	RIGID PVC
37	9598	STEEL REINFORCEMENT	P.H.TECH	GALVANIZED STEEL
38	9555	INSECT STOP	P.H.TECH	
39		HANDLE KIT	P.H.TECH	
40	7517.M	OPERATING PANEL SIDE STILE	P.H.TECH	RIGID PVC

REVISIONS			
REV	DESCRIPTION	DATE	APPROVED

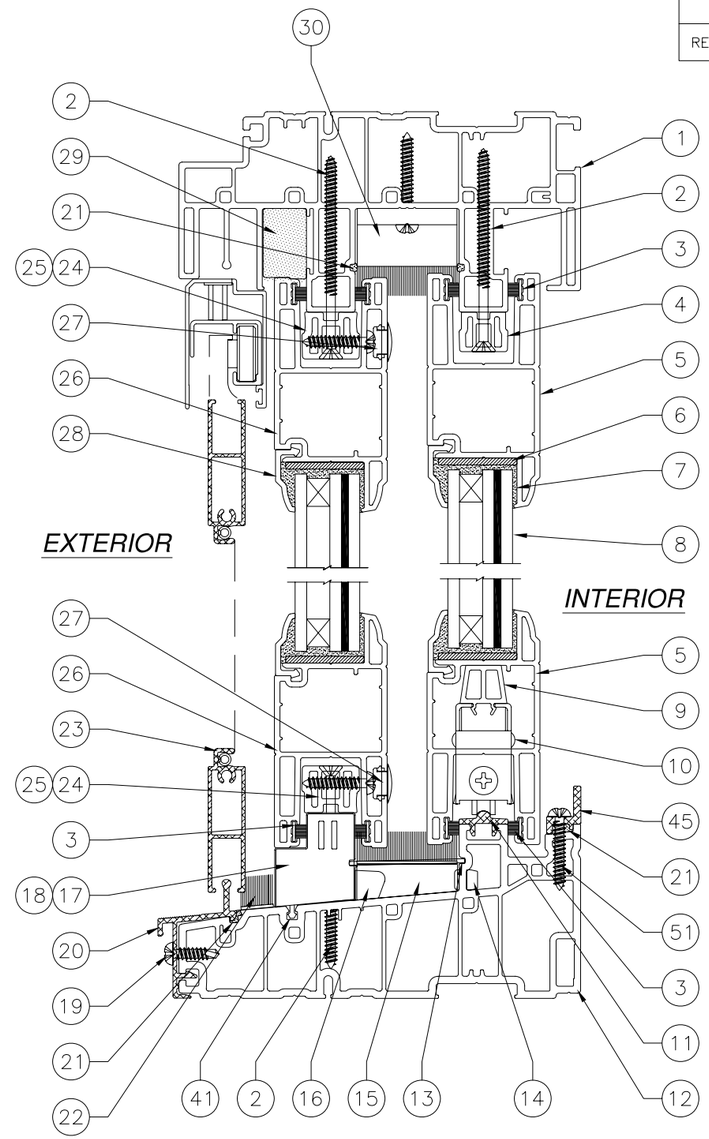

VERTICAL CROSS SECTION

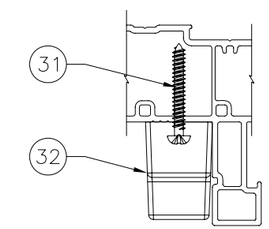

SASH STOPPER DETAIL

PROVIA DOOR, INC.
2150 STATE ROUTE 39 WEST
SUGARCREEK, OH 44681

REINFORCED VINYL SLIDING GLASS DOOR
STANDARD IMPACT RATED – 96 X 96
B.O.M. AND VERTICAL SECTION

DRAWN:	DWG NO.	REV
V.L.	08-01272	–
SCALE NTS	DATE 07/05/11	SHEET 2 OF 5

STATE OF TEXAS
LUIS R. LOMAS
101889
LICENSED
PROFESSIONAL ENGINEER

Luis R. Lomas P.E.
Texas No. 101889

PARTS LIST				
NO.	PART NUMBER	DESCRIPTION	MANUFACTURER	MATERIAL
41	8701	SILL ADAPTER	P.H.TECH	RIGID PVC
42	8960	KEEPER FOR SCREEN	P.H.TECH	
43	9612	#4x5/8" PH QUADREX SCREW	P.H.TECH	STAINLESS STEEL
44	7004.D	RIGHT JAMB	P.H.TECH	RIGID PVC
45	8935	WATER BAR	P.H.TECH	ALUMINUM 6063-T5
46	9249.SS	DOUBLE POINT MORTISE LOCK KIT	P.H.TECH	STAINLESS STEEL
47	7523	SASH COVERING CAP	P.H. TECH	RIGID PVC
48	9150	LOCK PLUG	P.H. TECH	RIGID PVC
49	7506	MEET STILE	P.H.TECH	RIGID PVC
50	9599	STEEL REINFORCEMENT	P.H.TECH	GALVANIZED STEEL
51		#8x1" PH PHILIPS SCREW	P.H.TECH	STAINLESS STEEL
52	9785	#8x2" TH QUADREX SCREW	P.H.TECH	STAINLESS STEEL
53	8936	INTERLOCK	P.H.TECH	ALUMINUM 6060-T61

REVISIONS			
REV	DESCRIPTION	DATE	APPROVED

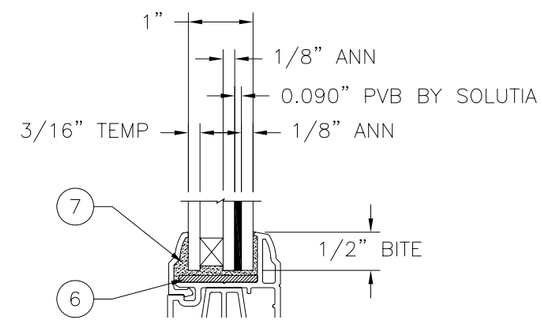

GLAZING DETAIL

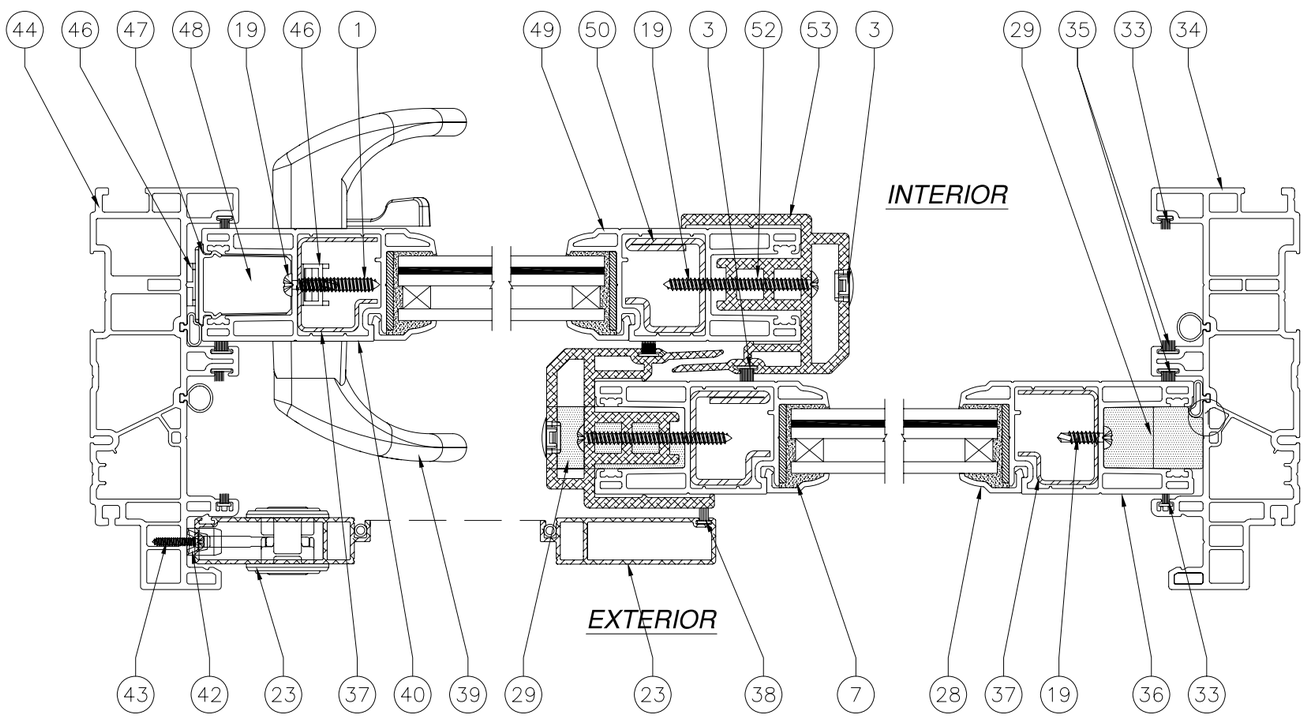

HORIZONTAL CROSS SECTION

PROVIA DOOR, INC.
2150 STATE ROUTE 39 WEST
SUGARCREEK, OH 44681

REINFORCED VINYL SLIDING GLASS DOOR
STANDARD IMPACT RATED – 96 X 96
B.O.M. HORIZONTAL SECTION & GLAZING DETAIL

DRAWN:	DWG NO.	REV
V.L.	08-01272	–

SCALE	DATE	SHEET
NTS	07/05/11	3 OF 5

Luis R. Lomas P.E.
Texas No. 101889

REVISIONS			
REV	DESCRIPTION	DATE	APPROVED

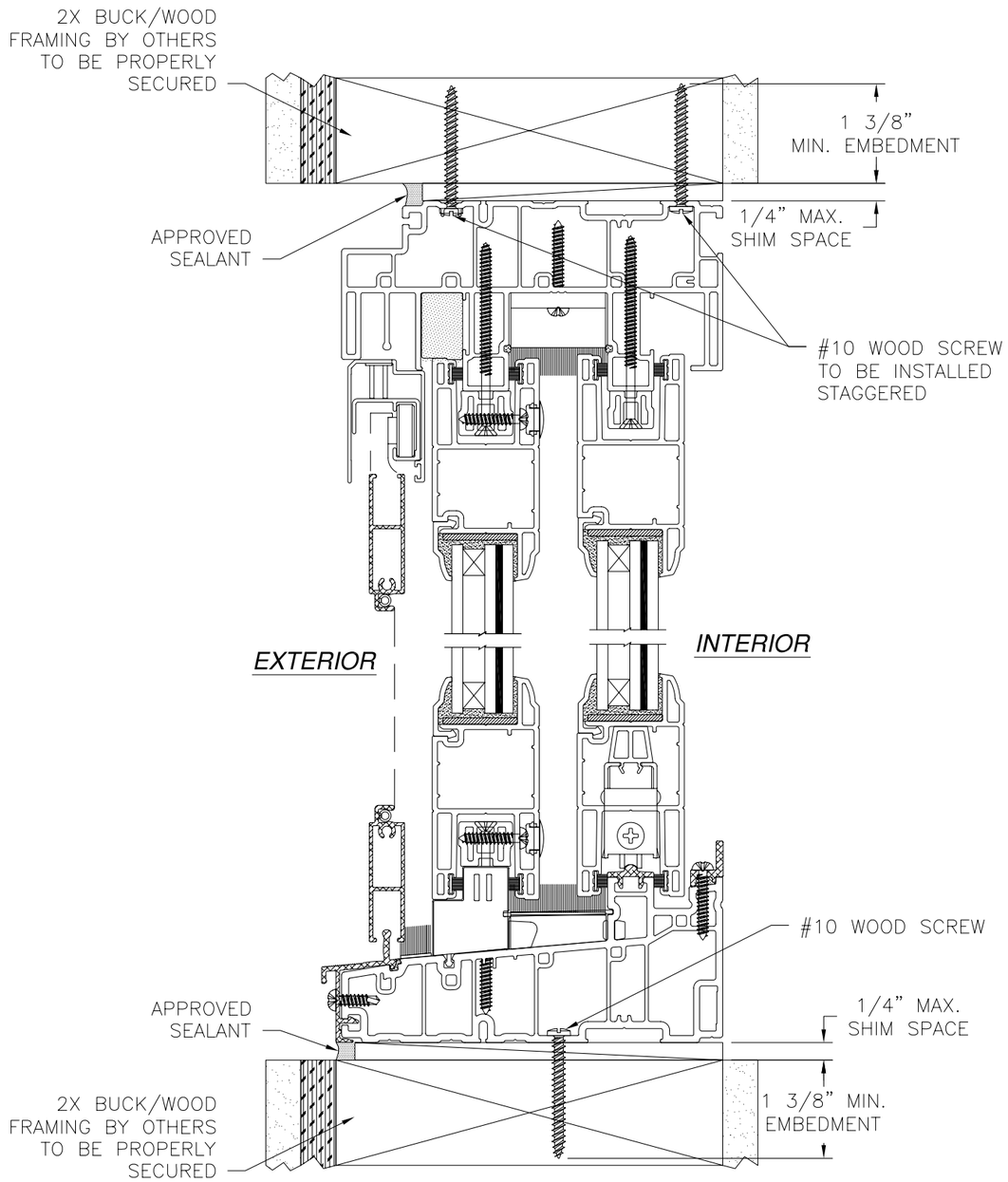

VERTICAL CROSS SECTION
2X BUCK/WOOD FRAMING INSTALLATION

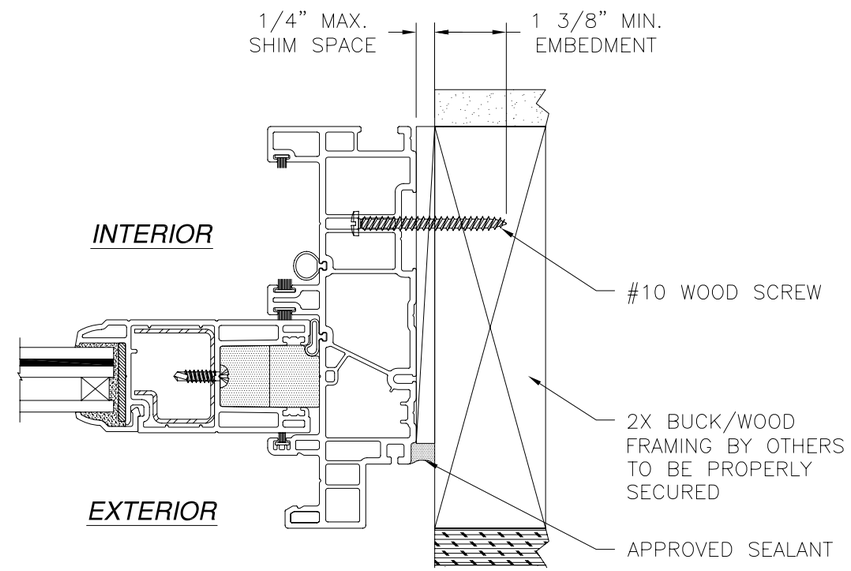

HORIZONTAL CROSS SECTION
2X BUCK/WOOD FRAMING INSTALLATION

PROVIA DOOR, INC.
2150 STATE ROUTE 39 WEST
SUGARCREEK, OH 44681

REINFORCED VINYL SLIDING GLASS DOOR
STANDARD IMPACT RATED – 96 X 96
INSTALLATION DETAILS

DRAWN:	DWG NO.	REV
V.L.	08–01272	–
SCALE NTS	DATE 07/05/11	SHEET 4 OF 5

STATE OF TEXAS
LUIS R. LOMAS
101889
LICENSED
PROFESSIONAL ENGINEER

Luis R. Lomas P.E.
Texas No. 101889

REVISIONS			
REV	DESCRIPTION	DATE	APPROVED

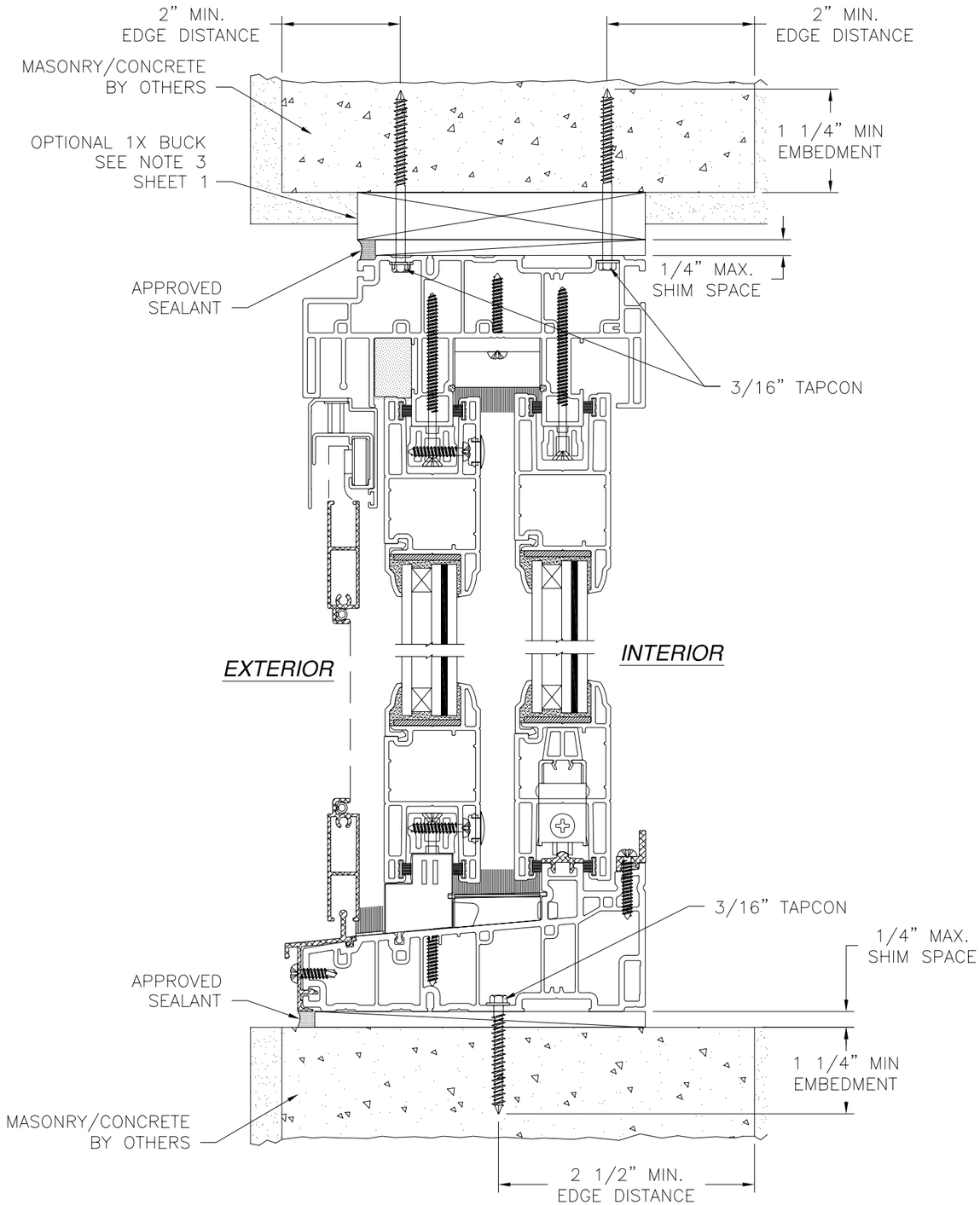

VERTICAL CROSS SECTION
MASONRY/CONCRETE INSTALLATION

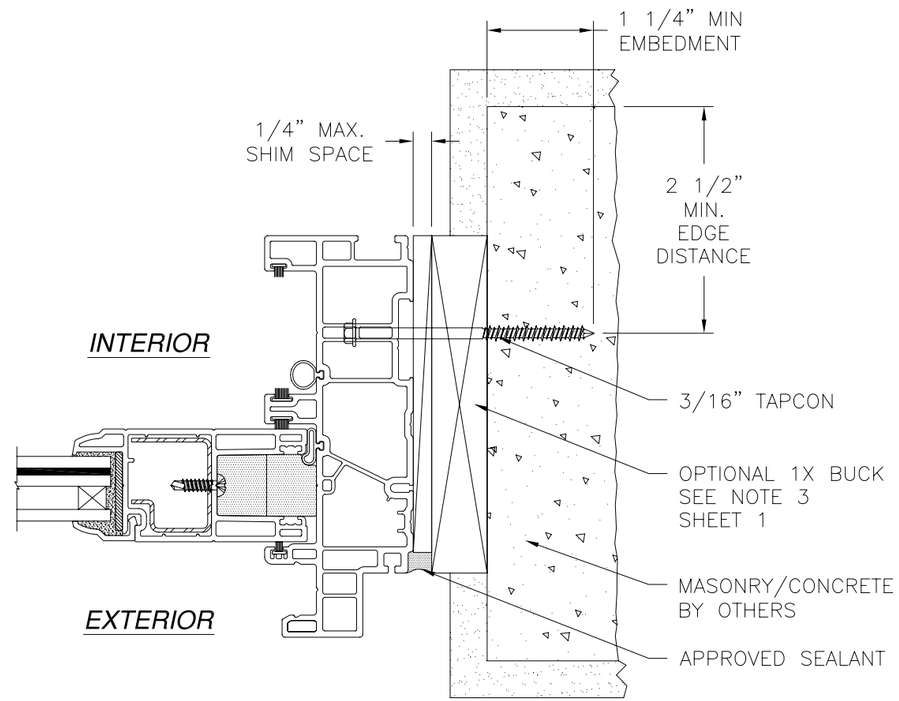

HORIZONTAL CROSS SECTION
MASONRY/CONCRETE INSTALLATION

PROVIA DOOR, INC.
2150 STATE ROUTE 39 WEST
SUGARCREEK, OH 44681

REINFORCED VINYL SLIDING GLASS DOOR
STANDARD IMPACT RATED – 96 X 96
INSTALLATION DETAILS

DRAWN:	DWG NO.	REV
V.L.	08–01272	–
SCALE NTS	DATE 07/05/11	SHEET 5 OF 5

Luis R. Lomas P.E.
Texas No. 101889