NATIONAL CUSTOM HOLLOW METAL DOOR & FRAMES

DIVISION OF BUSH-CALDWELL CO. INC.

OUTSWING FLUSH STEEL COMMERCIAL DOOR

INSTALLATION NOTES:

1. ONE (1) INSTALLATION ANCHOR IS REQUIRED AT EACH ANCHOR LOCATION SHOWN.
2. THE NUMBER OF INSTALLATION ANCHORS DEPICTED IS THE MINIMUM NUMBER OF ANCHORS TO BE USED FOR PRODUCT INSTALLATION.
3. INSTALL INDIVIDUAL INSTALLATION ANCHORS WITHIN A TOLERANCE OF ±1/2 INCH OF THE DEPICTED LOCATION IN THE ANCHOR LAYOUT DETAIL (I.E., WITHOUT CONSIDERATION OF TOLERANCES). TOLERANCES ARE NOT CUMULATIVE FROM ONE INSTALLATION ANCHOR TO THE NEXT.
4. SHIM AS REQUIRED AT EACH INSTALLATION ANCHOR WITH LOAD BEARING SHIM(S). MAXIMUM ALLOWABLE SHIM STACK TO BE 1/4 INCH. SHIM WHERE SPACE OF 1/16 INCH OR GREATER OCCURS. SHIM(S) SHALL BE CONSTRUCTED OF HIGH DENSITY PLASTIC OR BETTER.
5. FOR INSTALLATION INTO CONCRETE OR GROUT FILLED CMU, USE 3/8" DYNABOLT SLEEVE ANCHORS OF SUFFICIENT LENGTH TO ACHIVE A MINIMUM EMBEDMENT OF 1-1/2".
6. FOR INSTALLATION INTO 2X WOOD BUCK, USE 3/8" LAG SCREWS SAE GRADE 5 TYPE ANCHORS OF SUFFICIENT LENGTH TO ACHIEVE A MINIMUM EMBEDMENT OF 3".
7. MINIMUM EMBEDMENT AND EDGE DISTANCE EXCLUDE WALL FINISHES, INCLUDING BUT NOT LIMITED TO STUCCO, FOAM, BRICK VENEER, AND SIDING.
8. INSTALLATION ANCHORS AND ASSOCIATED HARDWARE MUST BE MADE OF CORROSION RESISTANT MATERIAL OR HAVE A CORROSION RESISTANT COATING.
9. FOR GROUT FILLED BLOCK, DO NOT INSTALL INSTALLATION ANCHORS INTO MORTAR JOINTS. EDGE DISTANCE IS MEASURED FROM FREE EDGE OF BLOCK OR EDGE OF MORTAR JOINT INTO FACE SHELL OF BLOCK.
10. INSTALLATION ANCHORS SHALL BE INSTALLED IN ACCORDANCE WITH ANCHOR MANUFACTURER'S INSTALLATION INSTRUCTIONS, AND ANCHORS SHALL NOT BE USED IN SUBSTRATES WITH STRENGTHS LESS THAN THE MINIMUM STRENGTH SPECIFIED BY THE ANCHOR MANUFACTURER.
11. INSTALLATION ANCHOR CAPACITIES FOR PRODUCTS HEREIN ARE BASED ON SUBSTRATE MATERIALS WITH THE FOLLOWING PROPERTIES:
    A. WOOD - MINIMUM SPECIFIC GRAVITY OF 0.42.
    B. CONCRETE -MINIMUM COMPRESSIVE STRENGTH OF 2700 PSI.
    C. MASONRY - STRENGTH CONFORMANCE TO ASTM C-90, GRADE N, TYPE 1 (OR GREATER), MIN. COMPRESSIVE STRENGTH = 1.5 KSI.

GENERAL NOTES:

1. THE PRODUCT SHOWN HEREIN IS DESIGNED AND MANUFACTURED TO COMPLY WITH THE 2006 INTERNATIONAL BUILDING CODE (IBC) AND INTERNATIONAL RESIDENTIAL CODE (IRC) WITH 2006 TEXAS REVISIONS, EFFECTIVE JANUARY 1, 2008 EXCLUDING HVHZ AND HAS BEEN EVALUATED ACCORDING TO THE FOLLOWING:
   - ASTM E 330-02
   - ASTM E1886-05
   - ASTM E1996-05
   - ANSI/SDI A250.13-2003
2. ADEQUACY OF THE EXISTING STRUCTURAL CONCRETE/MASONRY AND 2X FRAMING AS A MAIN WIND FORCE RESISTING SYSTEM CAPABLE OF WITHSTANDING AND TRANSFERRING APPLIED PRODUCT LOADS TO THE FOUNDATION IS THE RESPONSIBILITY OF THE ENGINEER OR ARCHITECT OF RECORD FOR THE PROJECT OF INSTALLATION.
3. 1X AND 2X BUCKS (WHEN USED) SHALL BE DESIGNED AND ANCHORED TO PROPERLY TRANSFER ALL LOADS TO THE STRUCTURE. BUCK DESIGN AND ANCHOR LAYOUT IS THE RESPONSIBILITY OF THE ENGINEER OR ARCHITECT OF RECORD FOR THE PROJECT OF INSTALLATION.
4. THE INSTALLATION DETAILS DESCRIBED HEREIN ARE GENERIC AND MAY NOT REFLECT ACTUAL CONDITIONS FOR A SPECIFIC SITE. IF SITE CONDITIONS CAUSE INSTALLATION TO DEVIATE FROM THE REQUIREMENTS DETAILED HEREIN, A LICENSED ENGINEER OR ARCHITECT SHALL PREPARE SITE SPECIFIC DOCUMENTS FOR USE WITH THIS DOCUMENT.
5. THIS PRODUCT IS LARGE AND SMALL MISSILE IMPACT RESISTANT APPROVED IMPACT PROTECTIVE SYSTEM **IS NOT REQUIRED** ON THIS PRODUCT IN AREAS REQUIRING IMPACT RESISTANCE.
6. DOOR PANEL MATERIAL: 16 GA. A60 GALVANIZED STEEL (0.063" MIN.)
   DOOR FRAME MATERIAL: SINGLE UNITS - 16 GA. A60 GALV. STEEL (0.063" MIN.). PAIR UNITS - 14 GA. A60 GALV. STEEL (0.078" MIN.)
7. DESIGNATIONS "X" AND "O" STAND FOR THE FOLLOWING:
   X: ACTIVE PANEL
   O: INACTIVE PANEL

STEEL DOOR CONSTRUCTION:

THE OVERALL PANEL THICKNESS IS 1 3/4 INCH THICK. THE DOOR LEAF IS CONSTRUCTED FROM 16 GA. (0.063") A60 GALVANIZED STEEL SHEETS. VERTICAL 22 GA. STEEL HAT CHANNEL STIFFENERS ARE LOCATED 6" FROM EACH END AND 6" ON CENTER. STEEL HAT CHANNEL STIFFENERS ARE SPOTWELDED TO EACH DOOR FACE SHEET WITH ENDS OF THE STIFFENERS WELDED TOGETHER. VERTICAL EDGES OF THE DOOR LEAF SHEETS ARE SPOT WELDED BETWEEN HARDWARE REINFORCEMENTS TO 14 GA. FULL LENGTH CHANNEL AND ARE CONTINUOUSLY ARC WELDED TOGETHER. TOP AND BOTTOM CHANNELS ARE 16 GA. STEEL AND ARE WELDED TO EACH FACE SHEET 3" O.C.. OPTIONAL FLUSHING CHANNELS ARE 18 GA. STEEL AND ARE LOCATED AT TOP AND BOTTOM RAILS. HINGE REINFORCEMENTS ARE LOCATED AT EACH HINGE LOCATION AND ARE 7. GA. STEEL TABS. LATCHING AND EXIT DEVICE HARDWARE REINFORCEMENTS ARE USED WHEN APPLICABLE.

CONFIGURATION	LATCHING HARDWARE TYPE	DESIGN PRESSURES: *WHERE WATER INFILTRATION IS NOT REQUIRED OR IS PROTECTED BY OVERHANG	DESIGN PRESSURES: WHERE WATER INFILTRATION REQUIREMENT IS NEEDED OR IS NOT PROTECTED BY OVERHANG	MISSILE IMPACT RATING
SINGLE	CYLINDRICAL OR MORTISE W/ DEADBOLT	+/- 70 PSF	NOT APPROVED	LARGE AND SMALL MISSILE IMPACT RATED
SINGLE	RIM EXIT DEVICE	+/- 70 PSF		
PAIR	CYLINDRICAL X SURFACE BOLTS OR MORTISE X SURFACE BOLTS	+/- 70 PSF		
PAIR	RIM EXIT DEVICES WITH REMOVABLE MULLION	+/- 70 PSF		
PAIR	CONCEALED X CONCEALED, SURFACE X SURFACE, OR CONCEALED X SURFACE VERTICAL RODS	+/- 70 PSF		

*NOTE: UNIT SHALL BE INSTALLED AT LOCATION PROTECTED BY OVERHANG SUCH THAT OVERHANG RATIO (OH) = OH LENGTH /OH HEIGHT GREATER THAN 1.

TABLE OF CONTENTS

SHEET	SHEET DESCRIPTION
1	INSTALLATION & GENERAL NOTES
2	ELEVATIONS
3	ANCHOR LAYOUTS & NOTES
4	VERTICAL SECTIONS
5	HORIZONTAL SECTIONS
6	HORIZONTAL SECTIONS
7	DETAILS & COMPONENTS
8	BILL OF MATERIALS & COMPONENTS

FRAME CONSTRUCTION:

THE DOOR FRAMES ARE CONSTRUCTED FROM 16 GAUGE (0.063") FOR SINGLE UNITS AND 14 GAUGE (0.078") FOR PAIR UNITS A60 GALVANIZED STEEL. FRAME PIECES ARE WELDED TOGETHER IN ACCORDANCE WITH HMMA 861-06. FRAMES ARE PREPPED WITH PIPE ANCHOR STRAPS OF EQUIVALENT GAUGE THICKNESS TO THE FRAME AT EACH ANCHOR LOCATION WELDED IN PLACE. 3/16" X 10" 7 GA. HINGE REINFORCEMENT IS LOCATED AT EACH HINGE LOCATION. LOCK STRIKE REINFORCEMENTS ARE USED WHEN APPLICABLE.

NATIONAL
CUSTOM HOLLOW METAL DOORS & FRAMES
1701 EAST 22ND ST.
LITTLE ROCK, AR 72206
PH: 501-372-3441 FX: 501-375-3070

TITLE: OS FLUSH STEEL DOOR INSTALLATION & GENERAL NOTES

PREPARED BY:
CERTWORKS, LLC
127 W. FAIRBANKS AVE., STE. 438
WINTER PARK, FL 32789
PH: (407) 644-6957 FX: (407) 644-2366

REVISIONS

NO.	DESCRIPTION	BY	DATE
A	UPDATED TABLE OF CONTENTS		

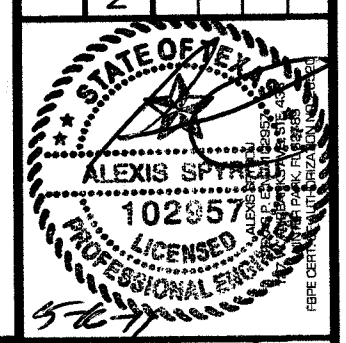

DATE: 4.20.11 | DWN BY: MSS | CHK BY: HN | SCALE: NTS

DWG #: NCHM002

SHEET: 1 OF 8

5/13/2011 2:30 PM

p:\projects\national hollow metal doors\dt-p-11-0418 impact steel door\dwg\nchm002.dwg

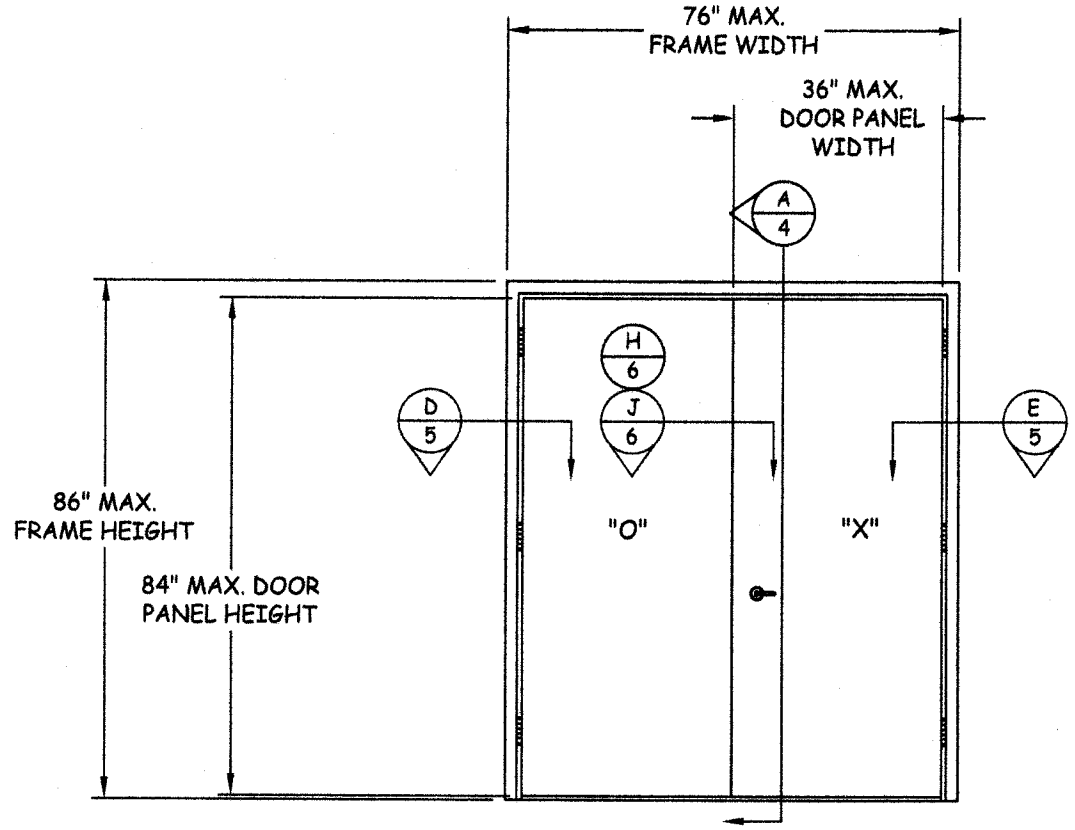

ELEVATION

CYLINDRICAL LOCK WITH DEAD BOLT OR MORTISE LOCKSET

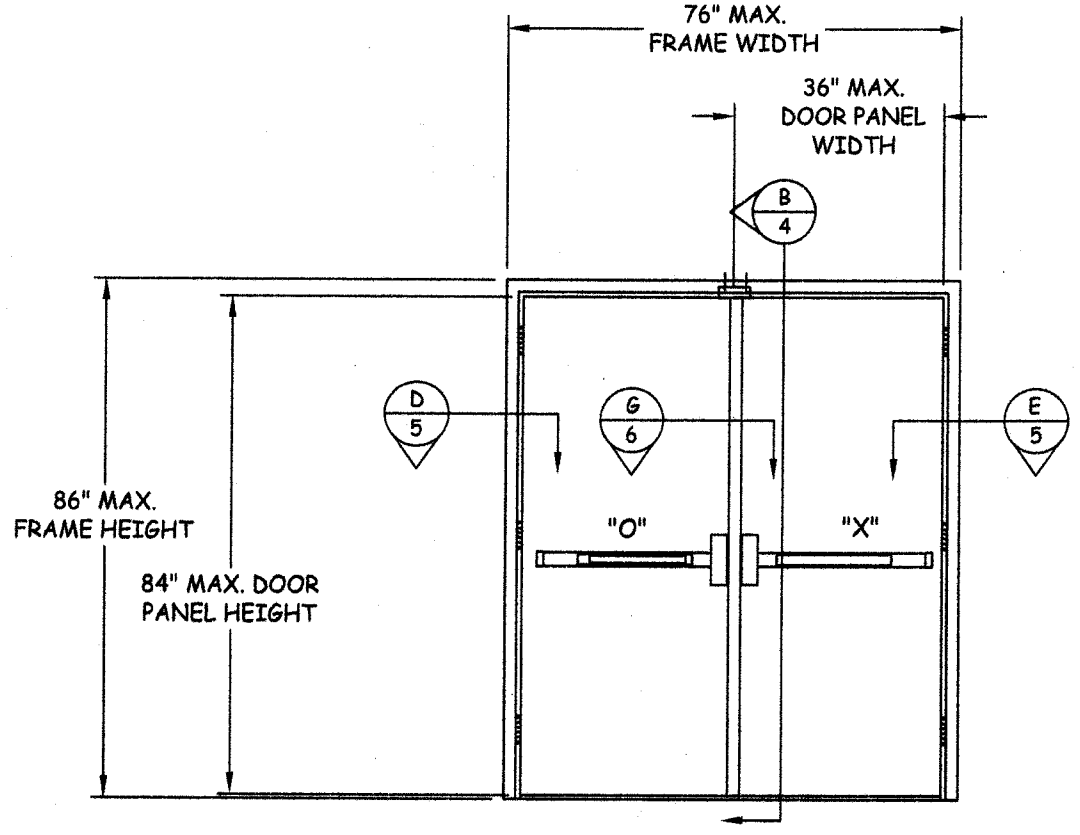

ELEVATION

RIM EXIT DEVICE WITH REMOVABLE MULLION

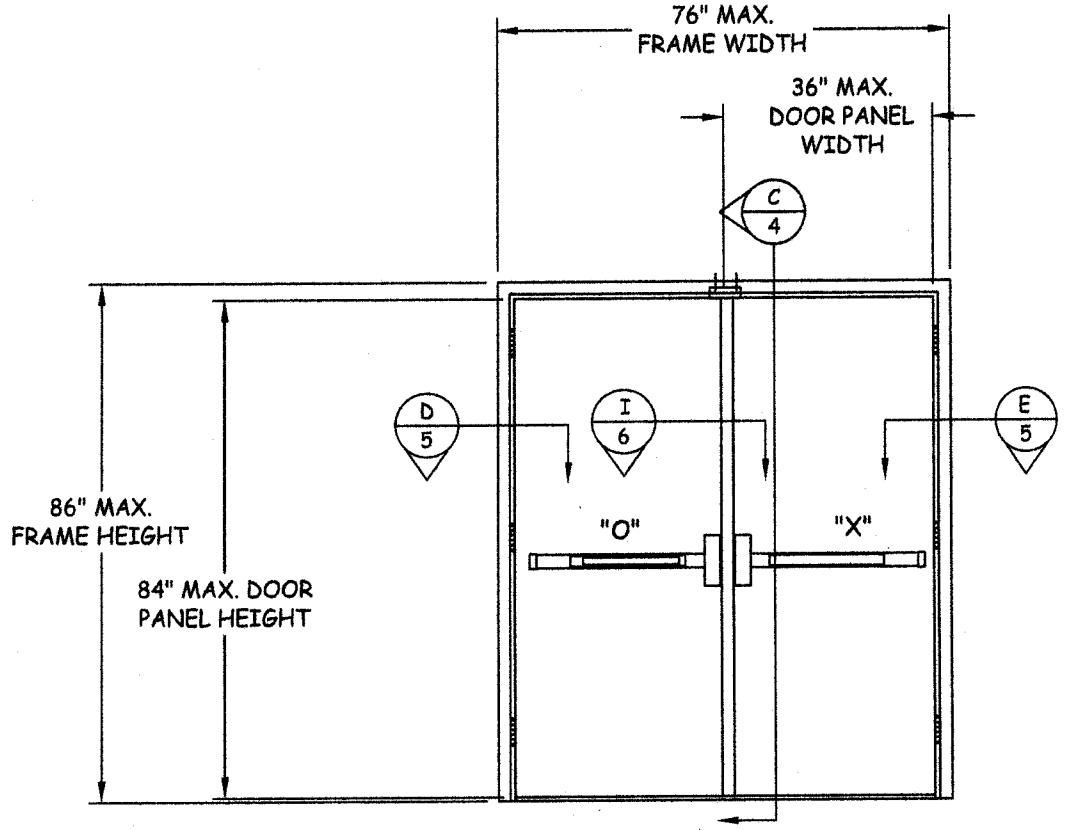

ELEVATION

RIM EXIT DEVICE WITH REMOVABLE MULLION

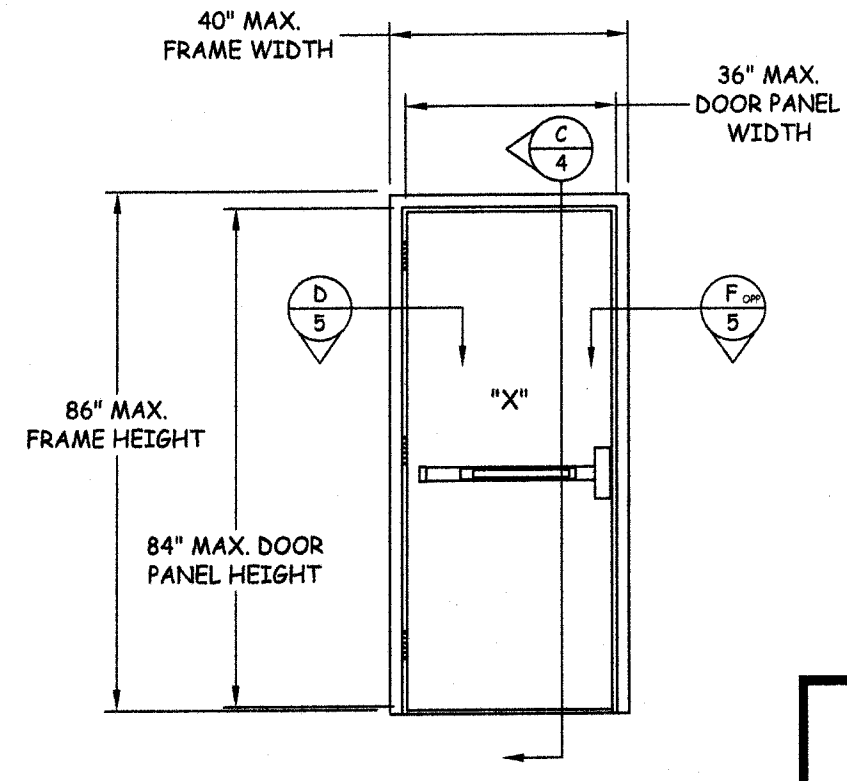

NOTE: SINGLE DOOR CONFIGURATIONS QUALIFIED WITH CYLINDRICAL LOCK WITH DEADBOLT AND MORTISE LOCKSETS.

ELEVATION

RIM EXIT DEVICE

NATIONAL
CUSTOM HOLLOW METAL DOORS & FRAMES
1701 EAST 22ND ST.
LITTLE ROCK, AR 72206
PH: 501-372-3441 FX: 501-375-3070

TITLE: OS FLUSH STEEL DOOR ELEVATIONS

PREPARED BY:
CERTWORKS, LLC
127 W. FAIRBANKS AVE., STE. 438
WINTER PARK, FL 32789
PH: (407) 644-6957 FX: (407) 644-2366

REVISIONS

NO.	DESCRIPTION	BY	DATE

STATE OF TEXAS
ALEXIS SPYROU
102957
LICENSED
PROFESSIONAL ENGINEER
5-16-11
ALEXIS SPYROU
TEXAS P.E. NO. 102957
127 W. FAIRBANKS AVE., STE. 438
WINTER PARK, FL 32789
FBPE CERT. OF AUTHORIZATION NO. 28320

DATE: 4.20.11
DWN BY: MSS
CHK BY: HN
SCALE: NTS

DWG #: NCHM002

SHEET: 2 OF 8

5/13/2011 2:31 PM

p:\projects\national hollow metal doors\tdt-p-11-0418 impact steel doors\dwg\nchm002.dwg

NOTE: SINGLE DOORS QUALIFIED FOR CYLINDRICAL WITH DEADBOLT OR MORTISE LOCKSET AS DEPICTED IN ACTIVE DOOR.

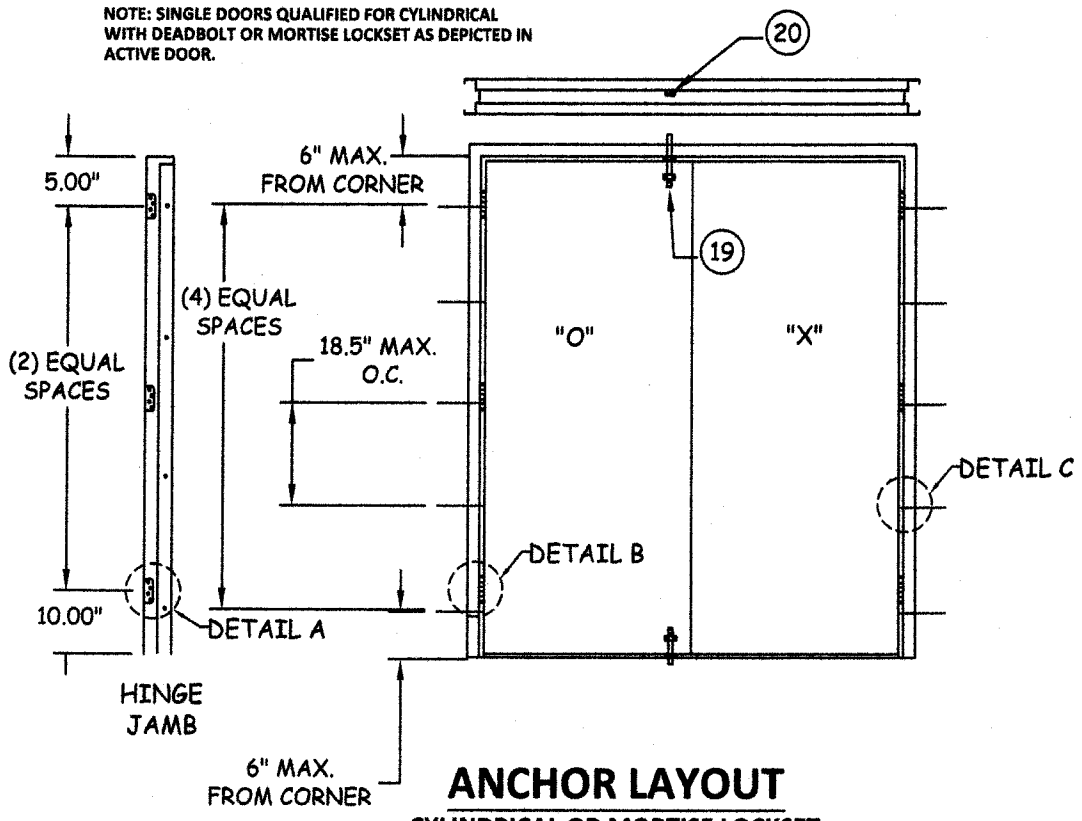

ANCHOR LAYOUT

CYLINDRICAL OR MORTISE LOCKSET WITH SURFACE BOLTS

NOTE: SINGLE DOORS QUALIFIED WITH RIM EXIT DEVICE AS DEPICTED IN ACTIVE DOOR.

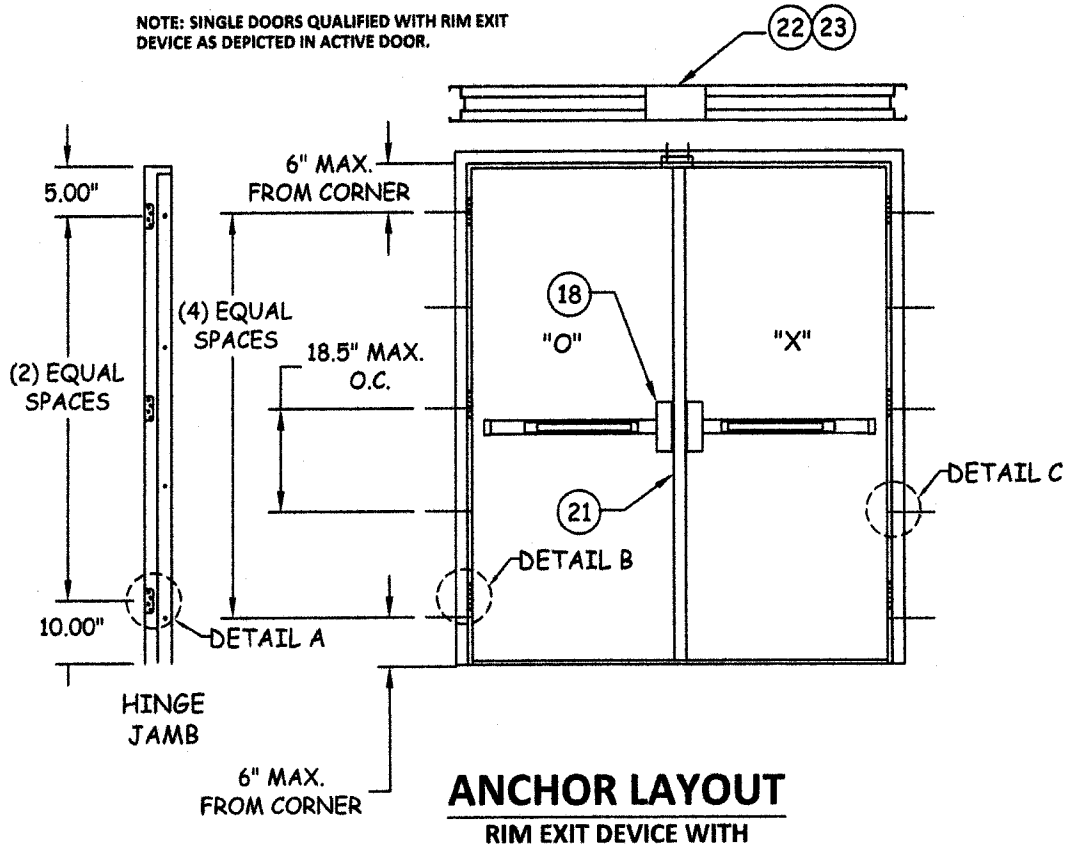

ANCHOR LAYOUT

RIM EXIT DEVICE WITH REMOVABLE MULLION

NOTE: SURFACE X SURFACE VERTICAL ROD OR CONCEALED X CONCEALED VERTICAL RODS QUALIFIED.

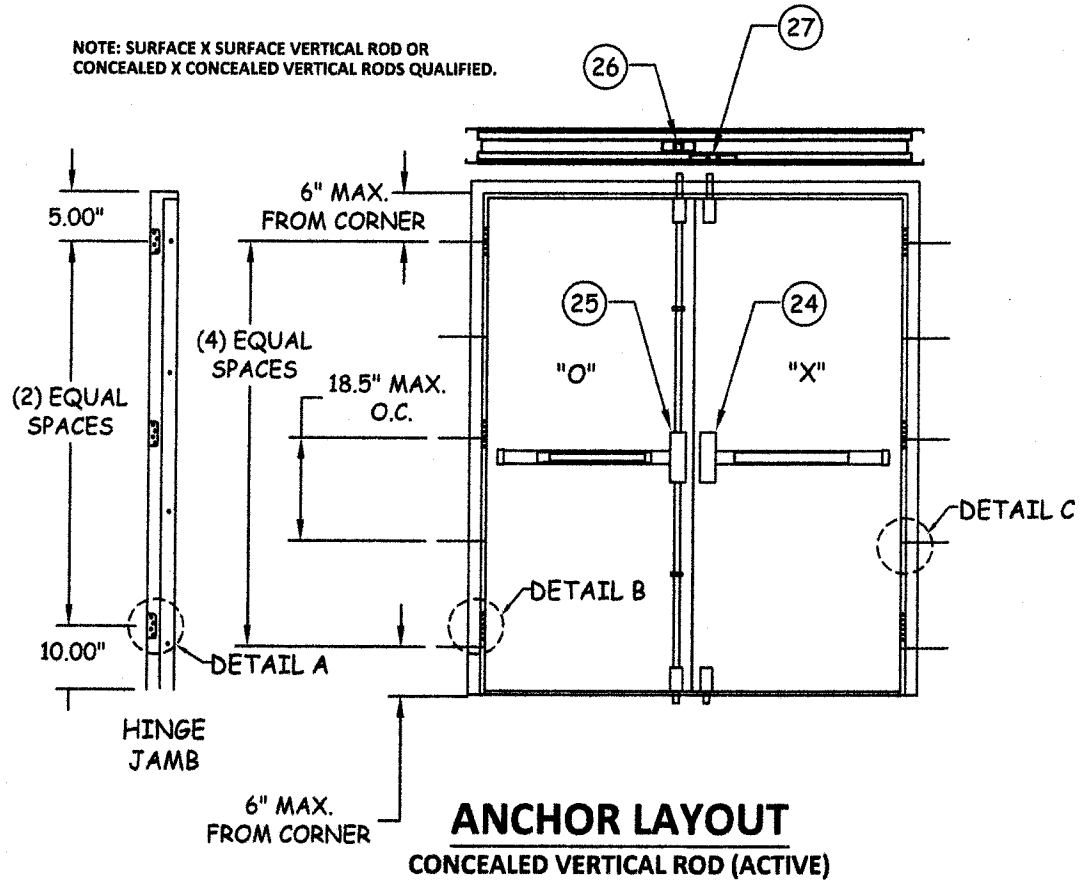

ANCHOR LAYOUT

CONCEALED VERTICAL ROD (ACTIVE) SURFACE VERTICAL ROD (INACTIVE)

NOTE: SINGLE DOOR ANCHOR LAYOUT BELOW APPLIES TO INSTALLATIONS WITH CYLINDRICAL LOCK WITH DEADBOLT AND MORTISE LOCKSETS.

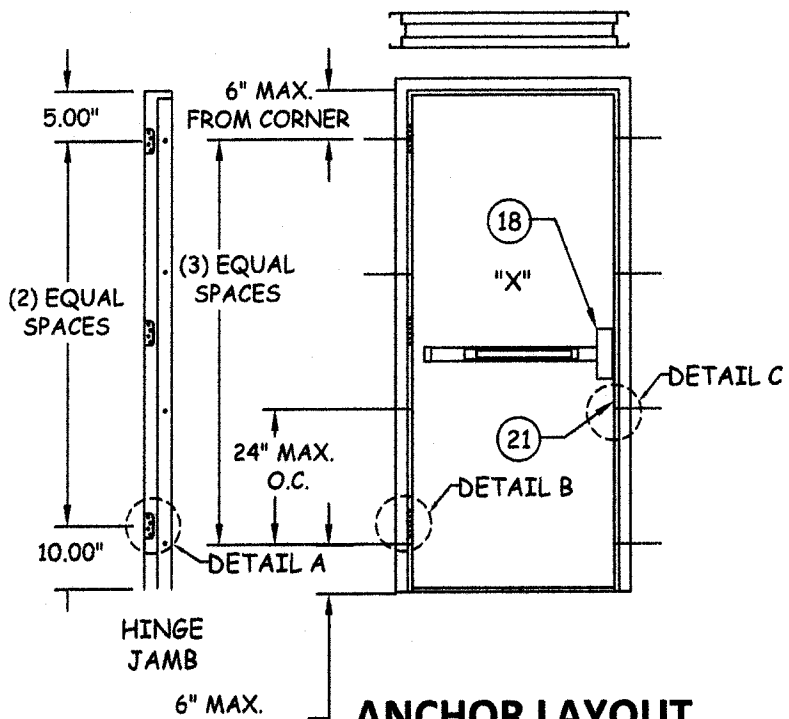

ANCHOR LAYOUT

RIM EXIT DEVICE WITH REMOVABLE MULLION

NATIONAL
CUSTOM HOLLOW METAL DOORS & FRAMES
1701 EAST 22ND ST.
LITTLE ROCK, AR 72206
PH: 501-372-3441 FX: 501-375-3070

TITLE: OS FLUSH STEEL DOOR ANCHOR LAYOUTS & NOTES

PREPARED BY: CERTWORKS, LLC
127 W. FAIRBANKS AVE., STE. 438
WINTER PARK, FL 32789
PH: (407) 644-6957 FX: (407) 644-2366

REVISIONS

NO.	DESCRIPTION	BY	DATE

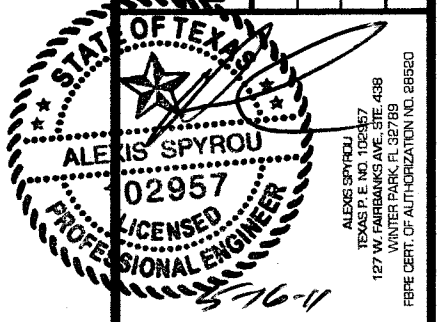

ALEXIS SPYROU
TEXAS P. E. NO. 102957
127 W. FAIRBANKS AVE., STE. 438
WINTER PARK, FL 32789
FBPE CERT. OF AUTHORIZATION NO. 28520

DATE: 4.20.11	DWN BY: MSS	CHK BY: HN	SCALE: NTS

DWG #: NCHM002

SHEET: 3 OF 8

5/13/2011 2:31 PM
p:\projects\national hollow metal doors\ds-p-11-0418 impact steel door\dwg\nchm002.dwg

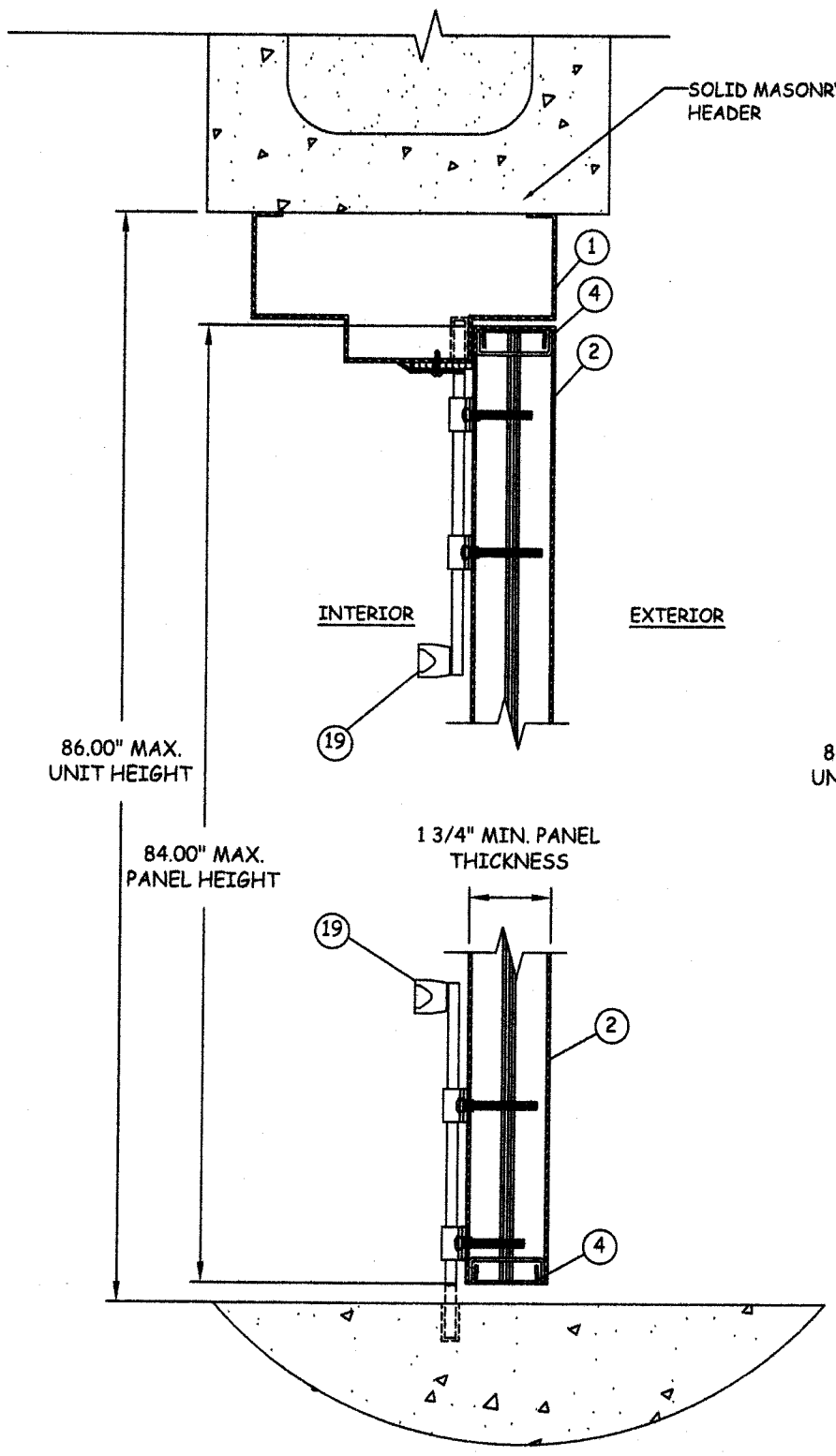

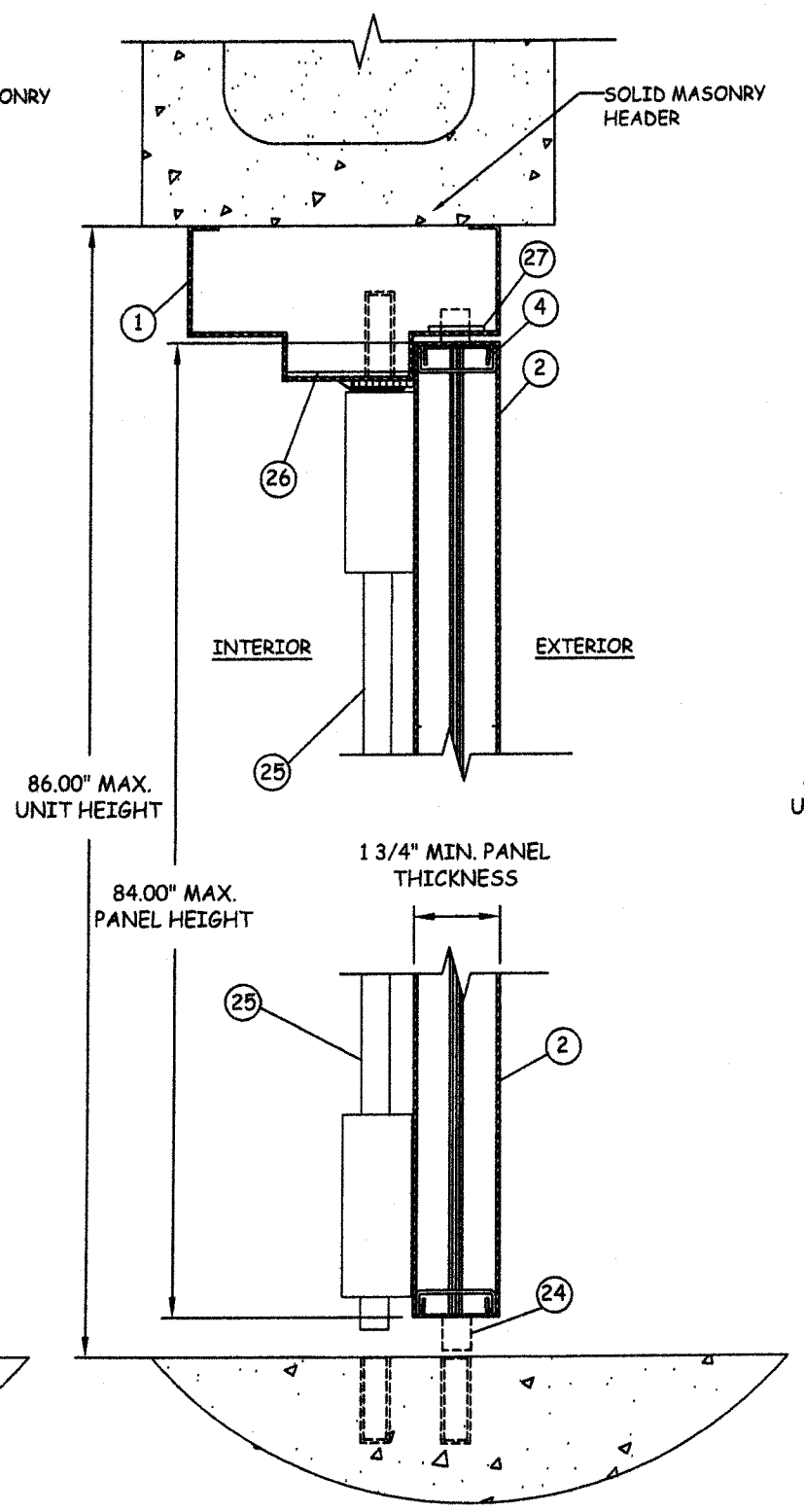

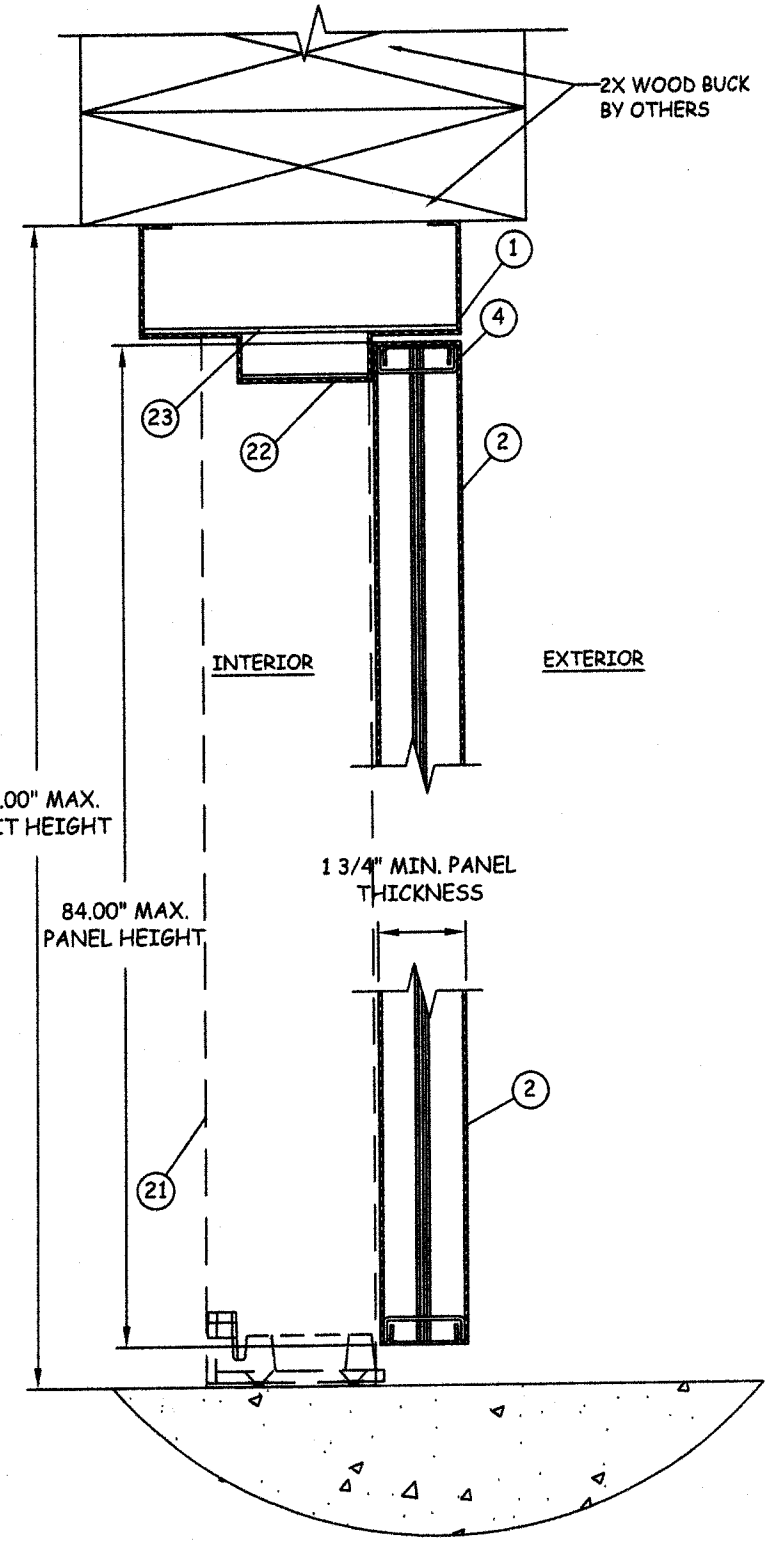

A/4 VERTICAL SECTION
HEAD/SILL - CONCRETE/MASONRY
(MORTISE LOCK/
CYLINDRICAL LOCK WITH SURFACE BOLTS)

B/4 VERTICAL SECTION
HEAD/SILL - CONCRETE/MASONRY
(SURFACE OR CONCEALED VERTICAL ROD)

C/4 VERTICAL SECTION
HEAD - 2X WOOD FRAME
SILL - CONCRETE
(REMOVABLE MULLION)

NATIONAL
CUSTOM HOLLOW METAL DOORS & FRAMES
1701 EAST 22ND ST.
LITTLE ROCK, AR 72206
PH: 501-372-3441 FX: 501-375-3070

TITLE: OS FLUSH STEEL DOOR VERTICAL SECTIONS

PREPARED BY:
CERTWORKS, LLC
127 W. FAIRBANKS AVE., STE. 438
WINTER PARK, FL 32789
PH: (407) 644-6957 FX: (407) 644-2366

REVISIONS

NO.	DESCRIPTION	BY	DATE

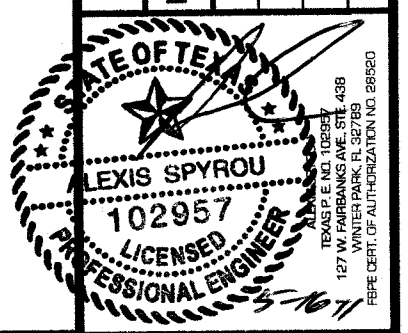

DATE: 4.20.11
DWN BY: MSS
CHK BY: HN
SCALE: NTS

DWG #: NCHM002

SHEET: 4 OF 8

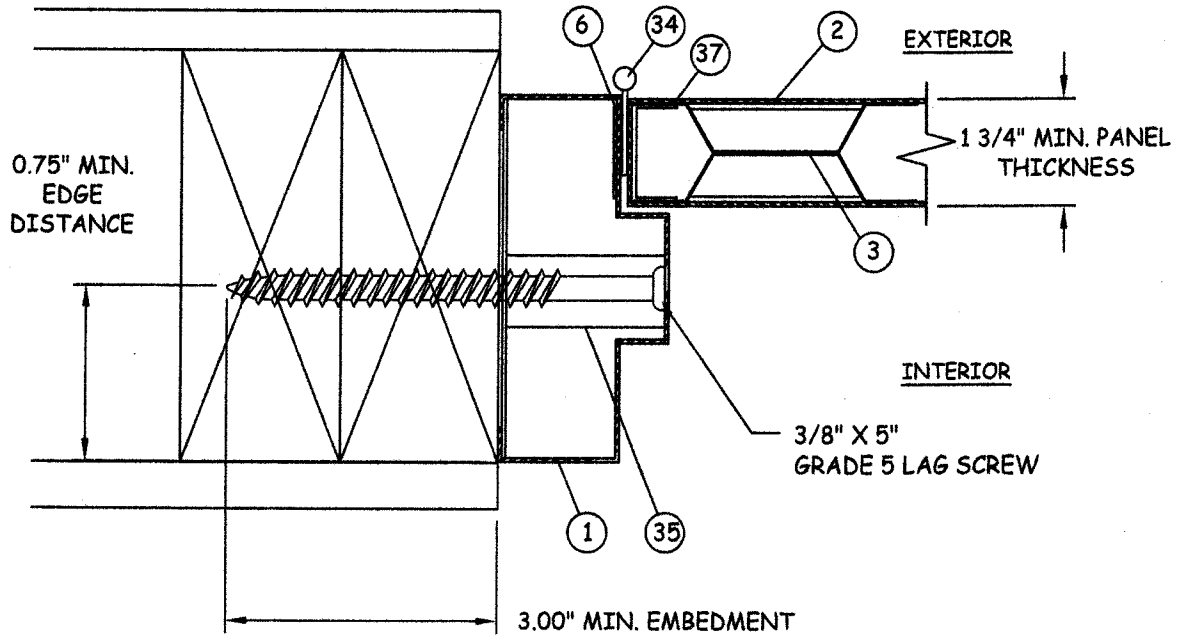

D/5 HORIZONTAL SECTION

JAMB - 2X WOOD BUCK
3/8" LAG SCREW

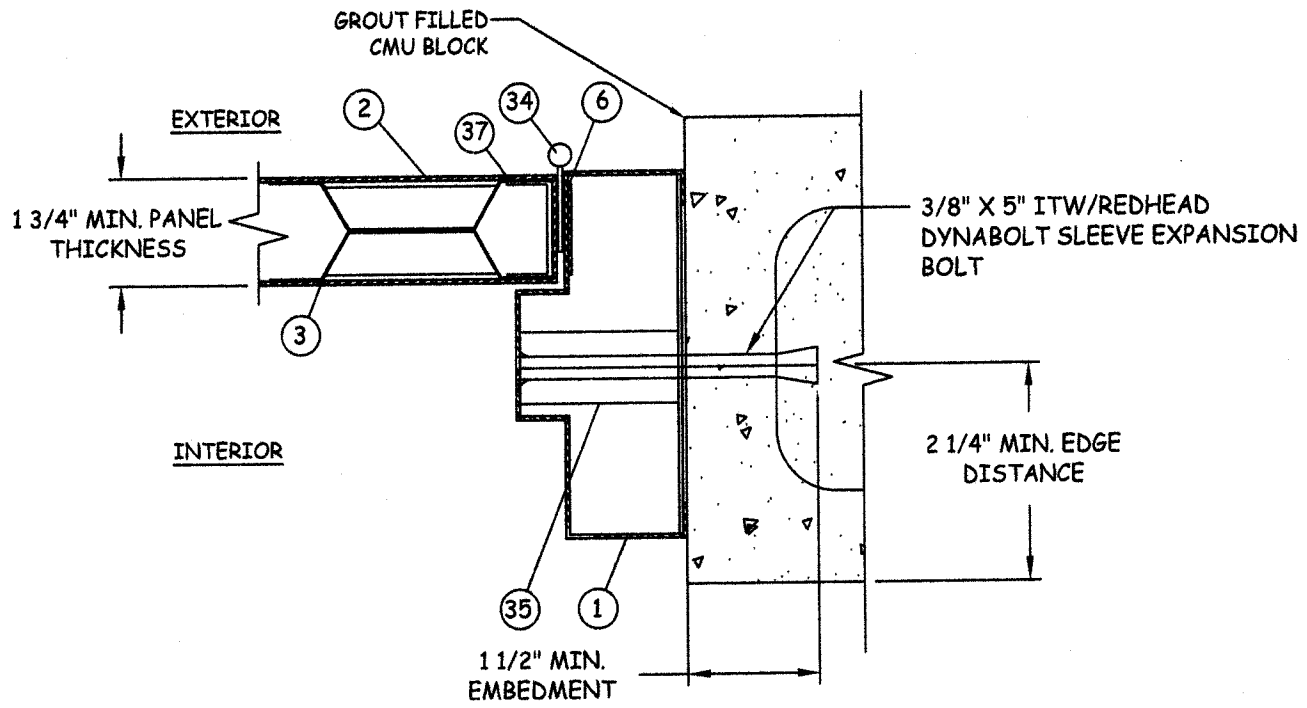

E/5 HORIZONTAL SECTION

JAMB - CONCRETE/GROUT FILLED CMU
3/8" SLEEVE ANCHOR

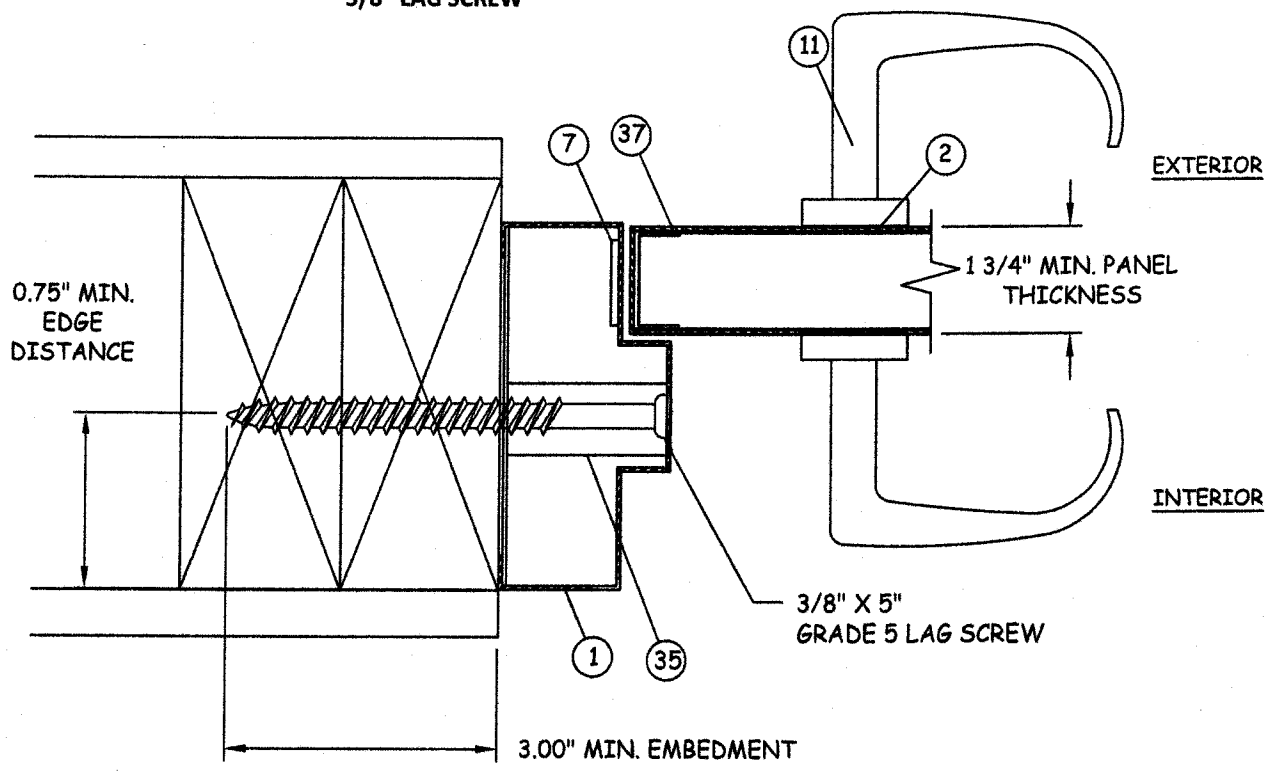

F/5 HORIZONTAL SECTION

JAMB - 2X WOOD BUCK
3/8" LAG SCREW

NATIONAL
CUSTOM HOLLOW METAL DOORS & FRAMES
1701 EAST 22ND ST.
LITTLE ROCK, AR 72206
PH: 501-372-3441 FX: 501-375-3070

TITLE: OS FLUSH STEEL DOOR
HORIZONTAL SECTIONS

PREPARED BY:
CERTWORKS, LLC
127 W. FAIRBANKS AVE., STE. 438
WINTER PARK, FL 32789
PH: (407) 644-6957 FX: (407) 644-2366

REVISIONS

NO.	DESCRIPTION	BY	DATE

STATE OF TEXAS
ALEXIS SPYROU
102957
LICENSED
PROFESSIONAL ENGINEER
5-16-11
ALEXIS SPYROU, P.E. NO. 102957
CERTWORKS, LLC
127 W. FAIRBANKS AVE., STE. 438
WINTER PARK, FL 32789
FBPE CERT. OF AUTHORIZATION NO. 28520

DATE: 4.20.11
DWN BY: MSS
CHK BY: HN
SCALE:

DWG #: NCHM002

SHEET: 5 OF 8

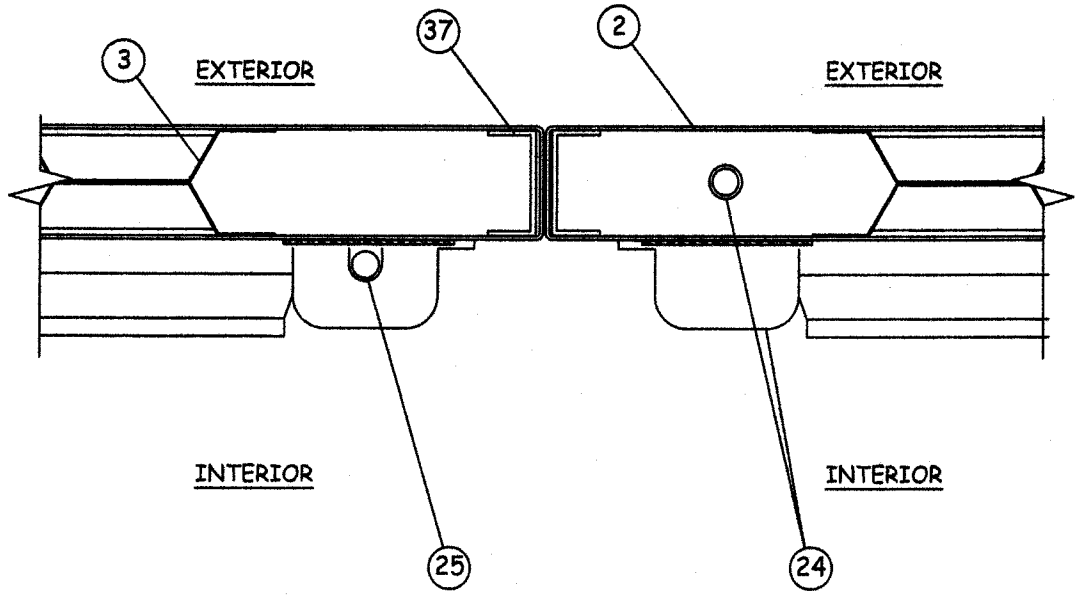

G/6 HORIZONTAL SECTION
SURFACE/CONCEALED VERTICAL ROD

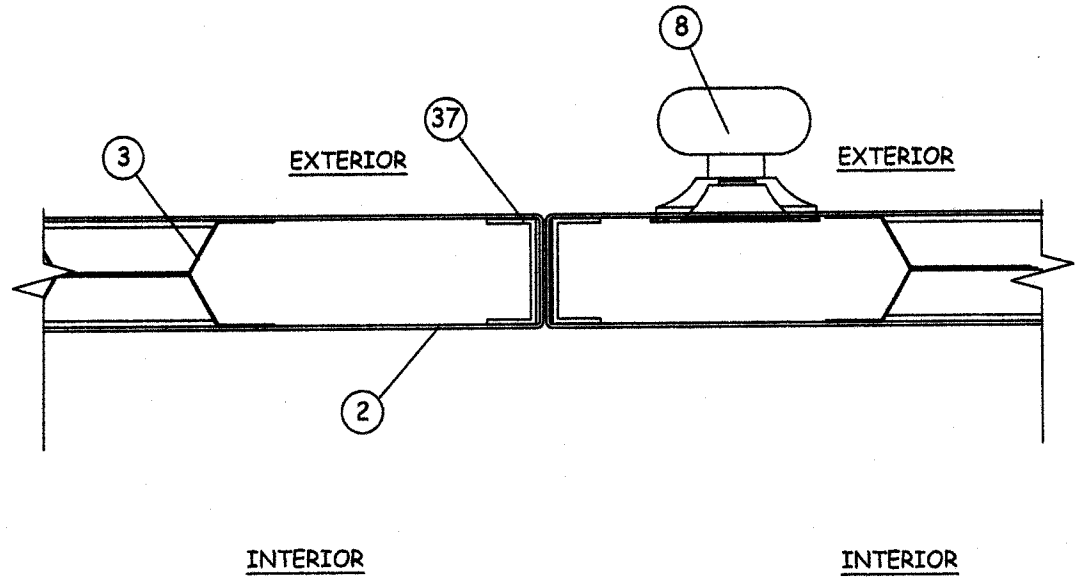

H/6 HORIZONTAL SECTION
CYLINDRICAL LOCK WITH DEADBOLT

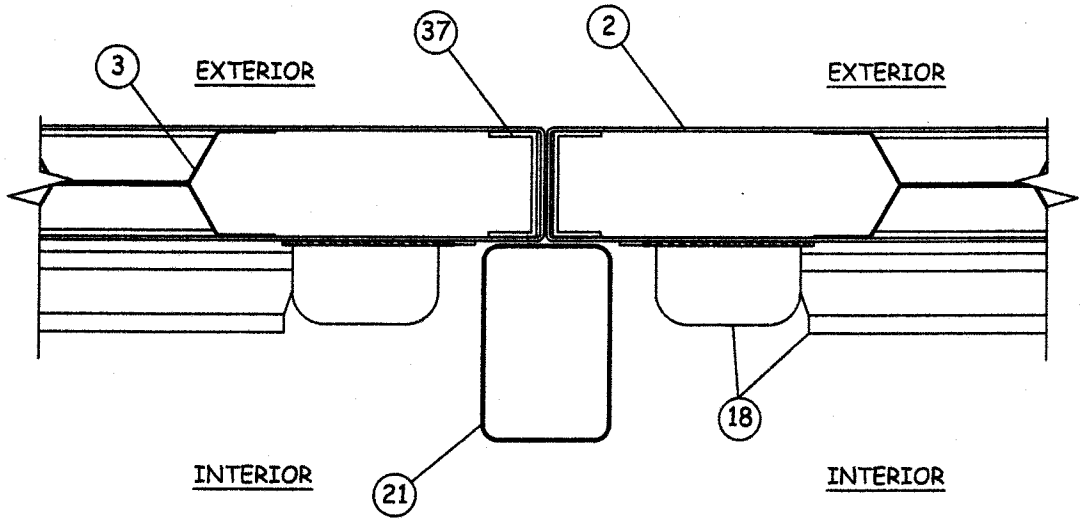

I/6 HORIZONTAL SECTION
REMOVABLE MULLION

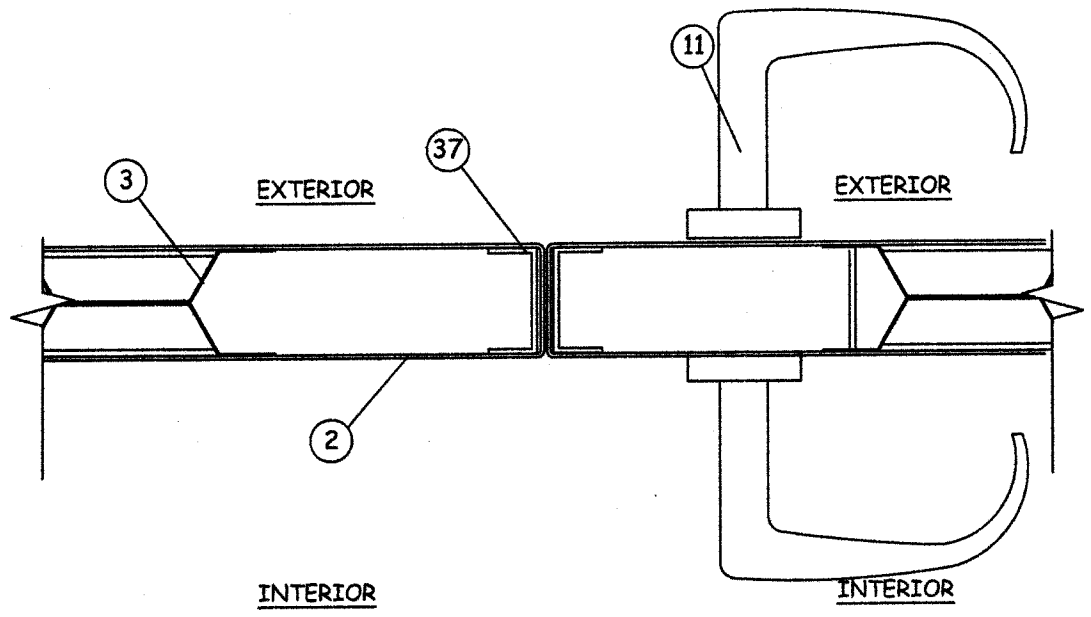

J/6 HORIZONTAL SECTION
MORTISE LOCKSET

NATIONAL
CUSTOM HOLLOW METAL DOORS & FRAMES
1701 EAST 22ND ST.
LITTLE ROCK, AR 72206
PH: 501-372-3441 FX: 501-375-3070

TITLE: OS FLUSH STEEL DOOR
HORIZONTAL SECTIONS

PREPARED BY:
CERTWORKS, LLC
127 W. FAIRBANKS AVE., STE. 438
WINTER PARK, FL 32789
PH: (407) 644-6957 FX: (407) 644-2366

REVISIONS

NO.	DESCRIPTION	BY	DATE

STATE OF TEXAS
ALEXIS SPYROU
102957
LICENSED
PROFESSIONAL ENGINEER
ALEXIS N. SPYROU
TEXAS P.E. NO. 102957
127 W. FAIRBANKS AVE., STE. 438
WINTER PARK, FL 32789
FBPE CERT. OF AUTHORIZATION NO. 28520
5-16-11

DATE: 4.20.11
DWN BY: MSS
CHK BY: HN
SCALE: NTS

DWG #: NCHM002

SHEET: 6 OF 8

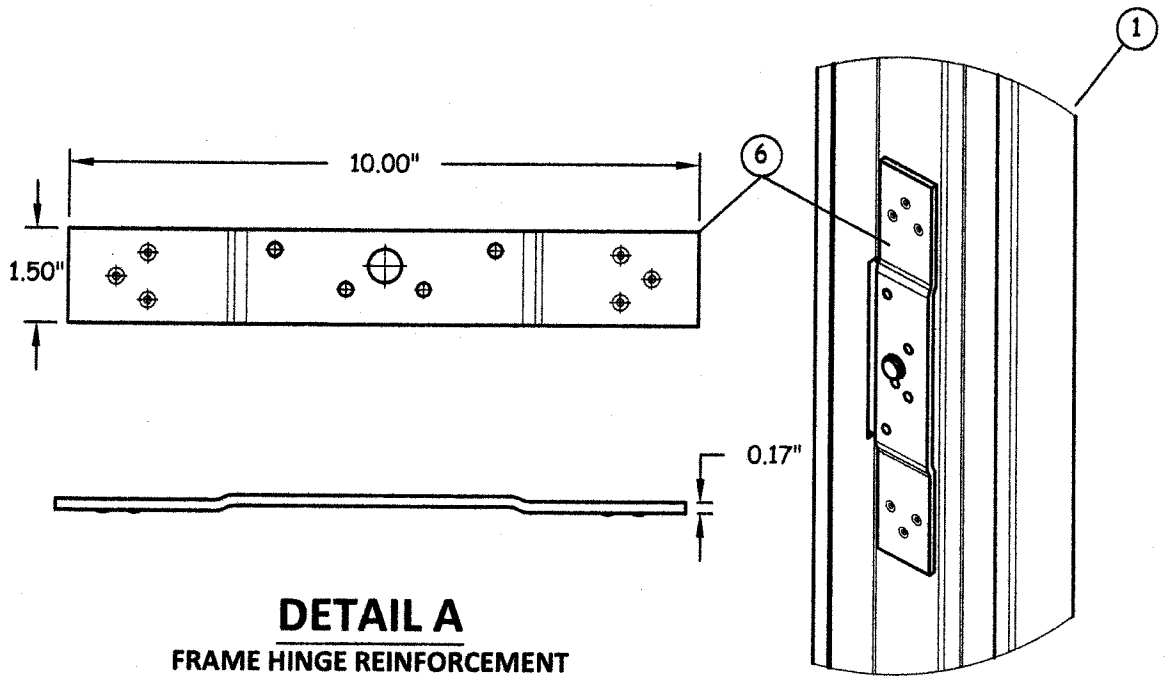

DETAIL A
FRAME HINGE REINFORCEMENT

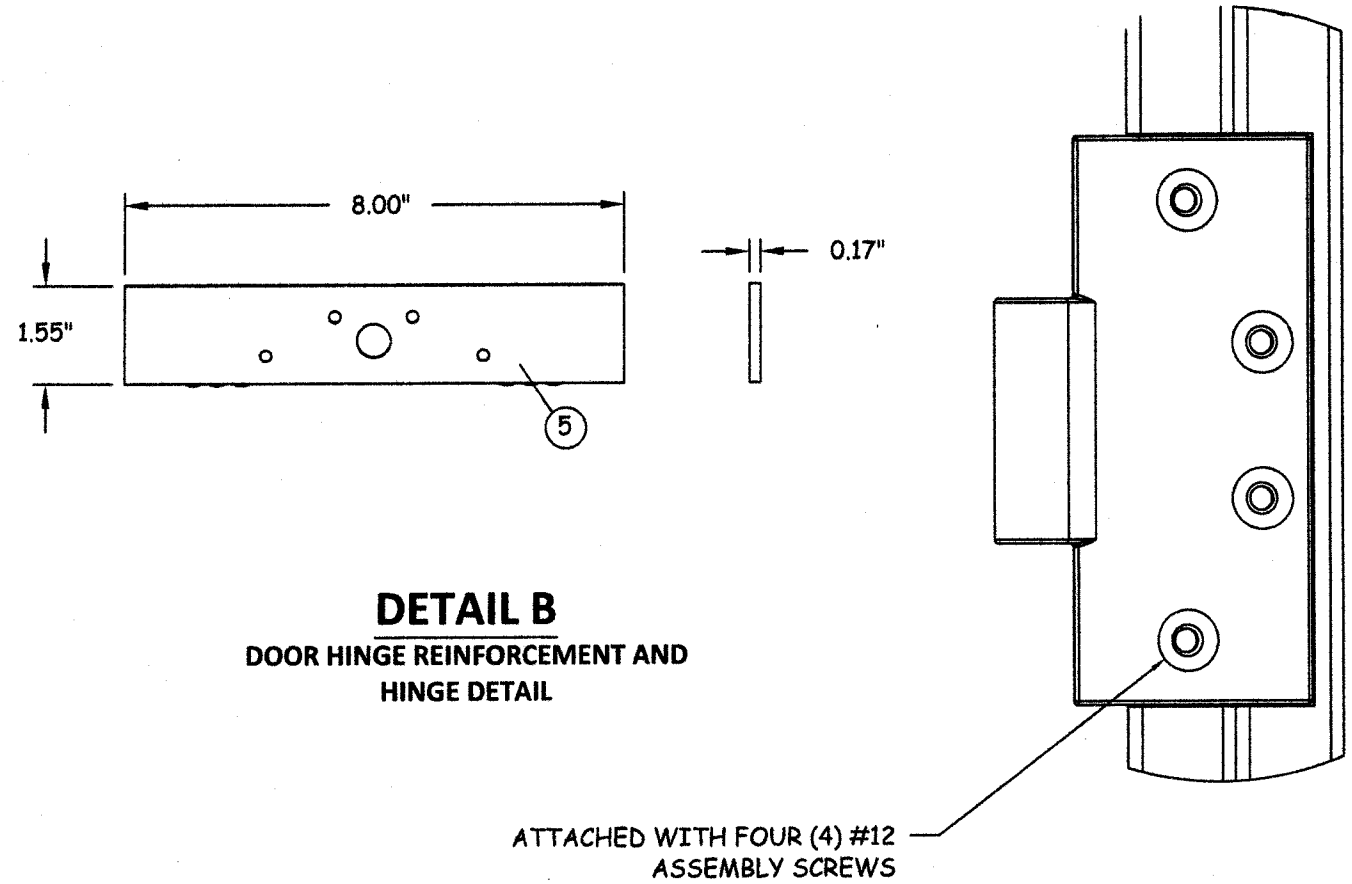

DETAIL B
DOOR HINGE REINFORCEMENT AND HINGE DETAIL

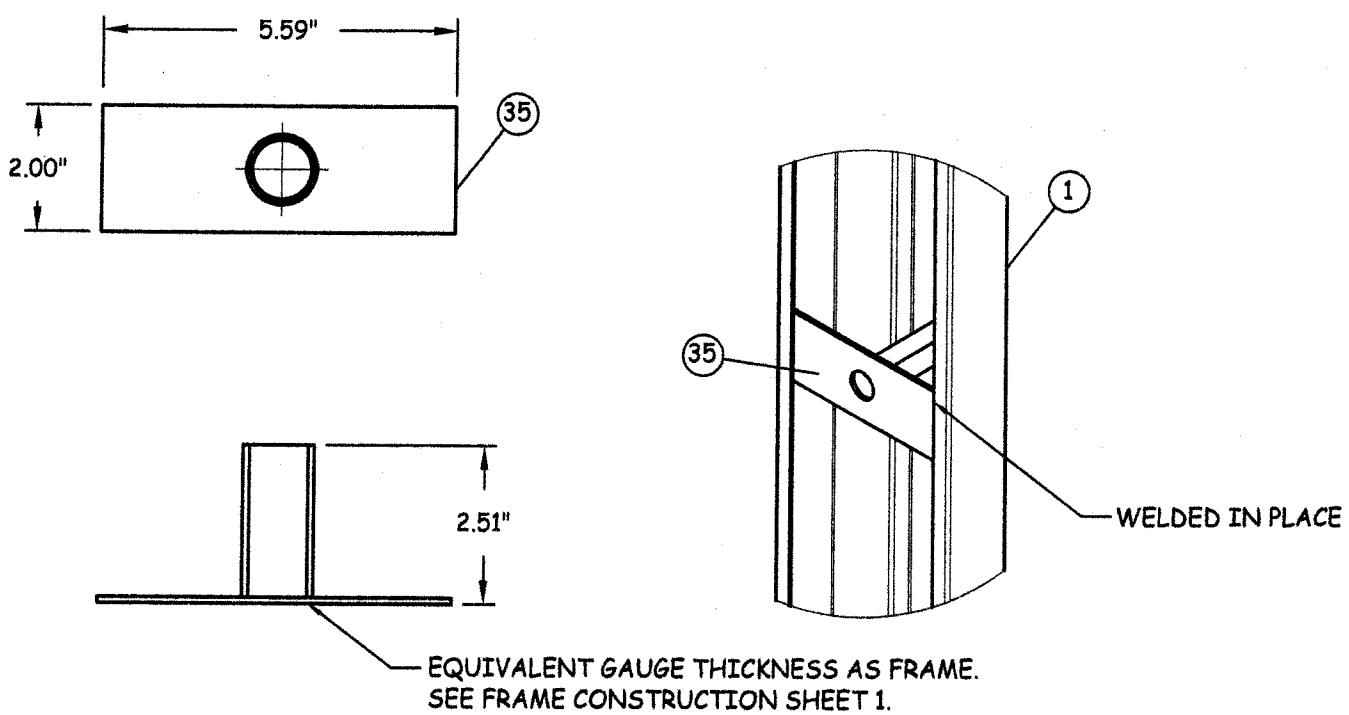

DETAIL C
ANCHOR STRAP

NATIONAL
CUSTOM HOLLOW METAL DOORS & FRAMES
1701 EAST 22ND ST.
LITTLE ROCK, AR 72206
PH: 501-372-3441 FX: 501-375-3070

TITLE:
OS FLUSH STEEL DOOR
STIFFENER
DETAILS & COMPONENTS

PREPARED BY:
CERTWORKS, LLC
127 W. FAIRBANKS AVE., STE. 438
WINTER PARK, FL 32789
PH: (407) 644-6957 FX: (407) 644-2366

REVISIONS

NO.	DESCRIPTION	BY	DATE

STATE OF TEXAS
ALEXIS SPYROU
102957
LICENSED
PROFESSIONAL ENGINEER
5-16-11

DATE: 4.20.11	DWN BY: MSS	CHK BY: HN	SCALE: NTS

DWG #: NCHM002

SHEET: 7 OF 8

BILL OF MATERIAL			
NO.	DESCRIPTION	MATERIAL	MANUFACTURER
1	FRAME - 5-3/4" DEPTH	16 GA./14 GA. A60 GALV. STEEL	NCHM
2	DOOR LEAF	16 GA. A60 GALV. STEEL SHEETS	NCHM
3	DOOR HAT CHANNEL STIFFENERS	22 GA. STEEL	NCHM
4	TOP AND BOTTOM DOOR CHANNELS	16 GA. STEEL	NCHM
5	DOOR HINGE REINFORCEMENTS	7 GA. STEEL	DAYTON IND.
6	FRAME HINGE REINFORCEMENT	3/16" X 10" - 7 GA. STEEL	DAYTON IND.
7	FRAME STRIKE REINFORCEMENT TAB - SINGLE UNITS	7 GA. STEEL	NCHM
8	CL3300 SERIES CYLINDRICAL LOCK	-	CORBIN RUSSWIN
9	CYLINDRICAL LOCK TAB-DOOR	10 GA. STEEL	NCHM
10	CYLINDRICAL LOCK REINFORCEMENT-DOOR	18 GA. STEEL	NCHM
11	8200 SERIES MORTISE LOCK WITH DEADBOLT	-	SARGENT
12	MORTISED LOCK TAB	10 GA. STEEL	NCHM
13	MORTISED LOCK REINFORCEMENT	14 GA. STEEL	NCHM
14	FRAME EXIT DEVICE REINFORCEMENT - SINGLE UNITS	12 GA. STEEL	NCHM
15	HINGE EDGE EXIT DEVICE REINFORCEMENT	14 GA. STEEL	NCHM
16	LATCH EDGE EXIT DEVICE REINFORCEMENT	14 GA. STEEL	NCHM
17	IN-ACTIVE DOOR STRIKE TAB	10 GA. STEEL	NCHM
18	7150 SERIES RIM EXIT DEVICE W/ INTERLOCKING STRIKE	-	YALE
19	988Y SURFACE BOLTS	-	YALE
20	SURFACE BOLT REINFORCEMENT - FRAME	12 GA. STEEL	NCHM
21	M200FWS REMOVABLE MULLION	2" X 3" STEEL TUBE	YALE
22	HEADER STOP REINFORCEMENT	12 GA. STEEL	NCHM
23	FULL WIDTH HEADER REINFORCEMENT	12 GA. STEEL	NCHM
24	8600 CVR EXIT DEVICE - ACTIVE LEAF	-	SARGENT
25	HC8700 SVR EXIT DEVICE - INACTIVE LEAF	-	SARGENT
26	SURFACE VERTICAL ROD STRIKE REINFORCEMENT	12 GA. STEEL	NCHM
27	CONCEALED VERTICAL ROD STRIKE TAB	7 GA. STEEL	NCHM
28	INTERIOR FACE SHEET EXIT DEVICE REINFORCEMENT	14 GA. STEEL	NCHM
29	INTERIOR FACE CONCEALED VERTICAL ROD EXIT DEVICE REINF.	14 GA. STEEL	NCHM
30	EXTERIOR FACE CONCEALED VERTICAL ROD EXIT DEVICE REINF.	14 GA. STEEL	NCHM
31	SURFACE VERTICAL ROD EXIT DEVICE HINGE EDGE REINF.	14 GA. STEEL	NCHM
32	SURFACE VERTICAL ROD EXIT DEVICE REINFORCEMENT	14 GA. STEEL	NCHM
33	SURFACE VERTICAL ROD CONTINUOUS LATCH EDGE REINF.	14 GA. STEEL	NCHM
34	TA 2714 BUTT HINGE - SECURED WITH (4) #12 METAL SCREWS	-	MCKINNEY
35	PIPE ANCHOR STRAPS	14 GA. STEEL	NCHM
36	DOOR FLUSHING CHANNEL (OPTIONAL)	18 GA. STEEL	NCHM
37	VERTICAL CHANNEL	14 GA. STEEL	NCHM

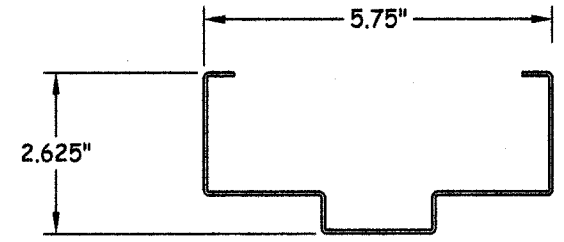

1 FRAME
16 GA./14 GA. A60 GALVANIZED STEEL

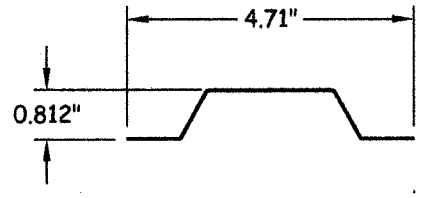

3 DOOR HAT CHANNEL STIFFENERS
22 GA. STEEL

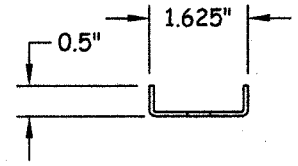

4 TOP & BOTTOM DOOR CHANNELS
16 GA. STEEL

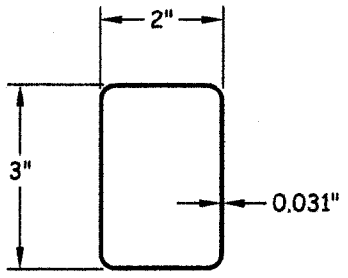

21 M200FWS REMOVABLE MULLION
STEEL TUBE

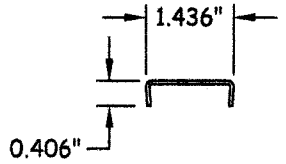

36 DOOR FLUSHING CHANNEL (OPTIONAL)
18 GA. STEEL

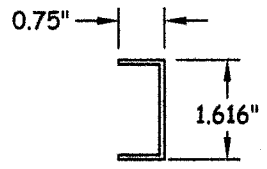

37 VERTICAL CHANNEL
14 GA. STEEL

NATIONAL
CUSTOM HOLLOW METAL DOORS & FRAMES
1701 EAST 22ND ST.
LITTLE ROCK, AR 72206
PH: 501-372-3441 FX: 501-375-3070

TITLE:
OS FLUSH STEEL DOOR
COMPONENTS &
BILL OF MATERIALS

PREPARED BY:
CERTWORKS, LLC
127 W. FAIRBANKS AVE., STE. 438
WINTER PARK, FL 32789
PH: (407) 644-6957 FX: (407) 644-2366

REVISIONS

NO.	DESCRIPTION	BY	DATE

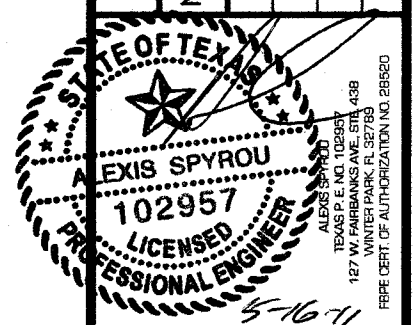

DATE: 4.20.11
DWN BY: MSS
CHK BY: HN
SCALE: NTS

DWG #:
NCHM002

SHEET: 8 OF 8