plastpro

5200 W. CENTURY BLVD.
LOS ANGELES, CA 90045

GLAZED FIBERGLASS DOUBLE DOOR
w/ or w/o SIDELITES
INSWING / OUTSWING
"NON- IMPACT"

EVALUATED FOR USE IN THE STATE OF TEXAS

The Plastpro Fiberglass Door described herein complies with the 2006 International Residential Code (IRC), Sections R301 & R613 and the 2006 International Building Code (IBC), Sections 1405.12, 1609, 1714.5, 2403 and 2404 (including Texas revisions) subject to the following conditions:

1. Anchors shall be as listed and spaced as shown in the details. Anchor embedment to base material shall be beyond wall dressing or stucco.
2. When used in areas requiring wind-borne debris protection this product is required to be protected with an impact resistant covering that complies with Section R301.2.1.2 of the IRC and Section 1609.1.2 of the IBC.
3. Allowable design pressure requirements must be equal to or less than the design pressure rating shown in the design pressure chart, sheet 1 of this drawing.
4. Conditions not covered by this drawing are subject to further engineering analysis.

SUPPORTING DOCUMENTS & EVIDENCE

1. Testing per AAMA/WDMA/CSA 101/I.S.2/A440-05 & ASTM E 330-02:
   Testing Evaluation Laboratories, Inc. test report(s) #: TEL 01390242 & TEL 01390307.
2. ETC Laboratories test report #: ETC-10-209-23677.1, ETC-10-209-24644.0.
   Calculations (Anchoring and Glass load resistance report ASTM E1300-04) prepared by Lyndon F.
3. Schmidt, P.E.
   Certificate of Participation issued by the National Accreditation and Management Institute, Inc., certifying that Plastpro is manufacturing products within a Quality Assurance program.

TABLE OF CONTENTS

SHEET#	DESCRIPTION
1	Typical elevations, design pressures & general notes
2	Door panel details
3	Sidelite panel details
4	Elevations
5	Vertical cross sections
6	Vertical cross sections
7	Horizontal cross sections
8	Buck and frame anchoring (XX)
9	Buck and frame anchoring (OXXO)
10	Astragal details
11	Bill of materials, components and glazing details

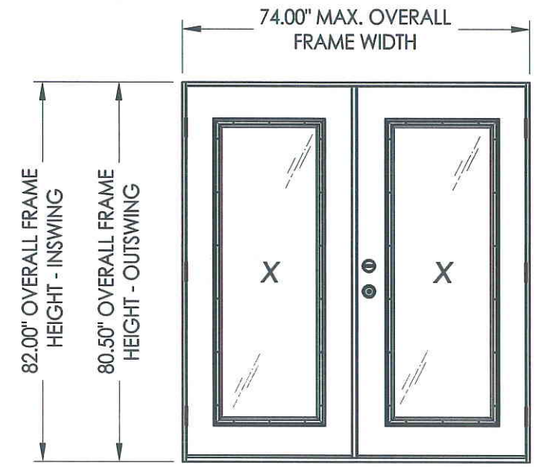

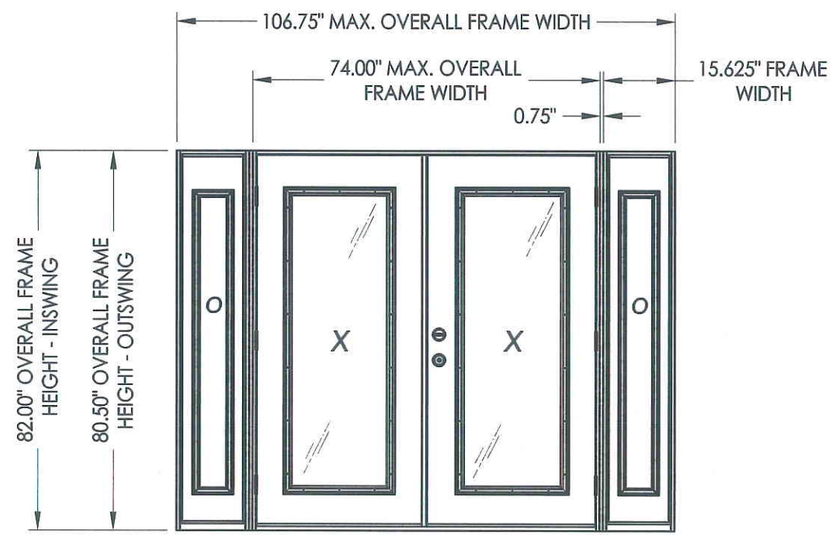

CONFIGURATION	MAX. FRAME DIMENSION	MAX. D.L.O. DIMENSION	DESIGN PRESSURE (PSF)	
			POSITIVE	NEGATIVE
XX	74.0" x 82.0"	21.0" X 63.0"	+45.0	-45.0
OXXO	106.75" x 82.0"	21.0" X 63.0"	+45.0	-45.0

STATE OF TEXAS
LYNDON F. SCHMIDT
104123
LICENSED PROFESSIONAL ENGINEER

Documents Prepared By: Lyndon F. Schmidt, P.E.
TEXAS P.E. #104123
RW BUILDING CONSULTANTS, INC.
P.O. Box 230 Valrico FL. 33595
Phone No.: 813.659.9197
TEXAS BOARD OF PROFESSIONAL ENGINEERS
CERTIFICATE OF REGISTRATION # F-11852

PRODUCT: PLASTPRO FIBERGLASS DOOR

PART OR ASSEMBLY: TYPICAL ELEVATION, DESIGN PRESSURES & GENERAL NOTES

NO.	DATE	REVISIONS	BY

DATE: 1/17/11
SCALE: N.T.S.
DWG. BY: JK
CHK. BY: LFS
DRAWING NO.: TX-4121
SHEET 1 OF 11

© 2011 R.W. BUILDING CONSULTANTS INC.

\\sbs2k3\RWBC\A - Projects\Project Folders\proj 1501 - 1600\PF 1553\D. RWBC Drawings\1.17.11NEW\TX-4116.dwg, TX-4121

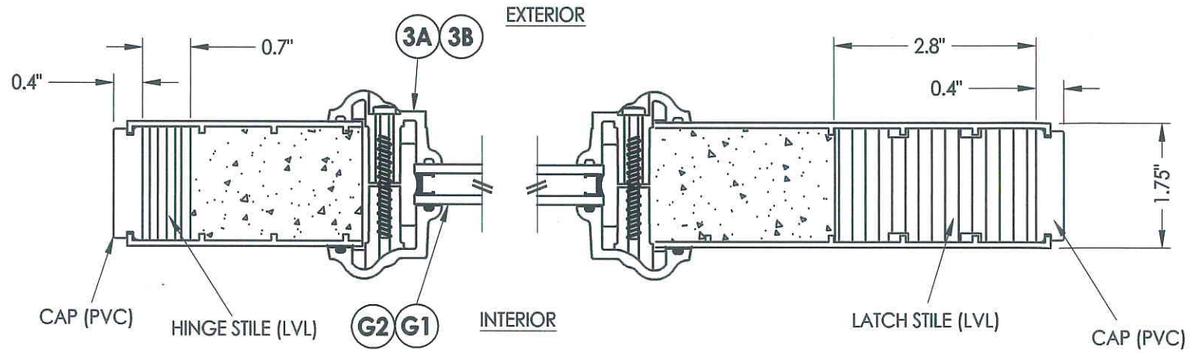

1/2 **HORIZONTAL CROSS SECTION**

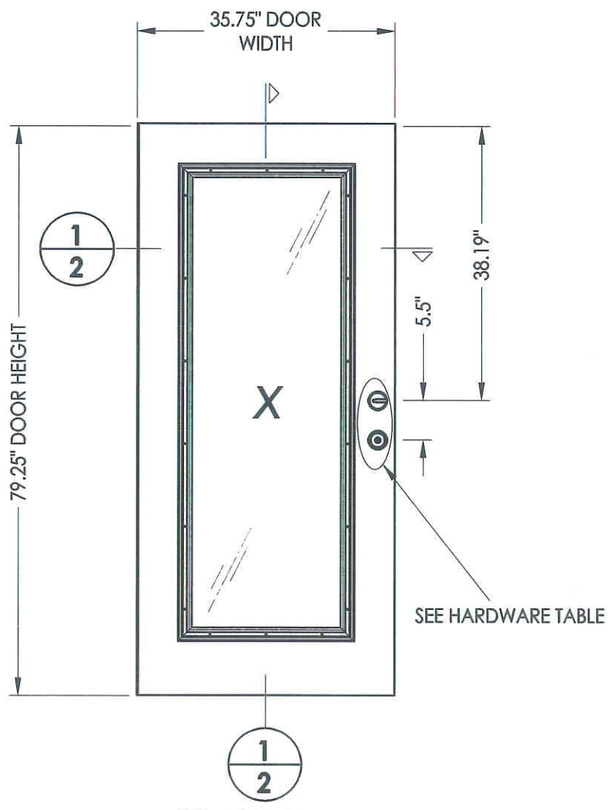

40 **DOOR PANEL**
Plastpro
Fiberglass

HARDWARE TABLE	
MANUFACTURER	MODEL
KWIKSET	KNOB: SIGNATURE SERIES DEADBOLT: SIGNATURE SERIES (780)
SCHLAGE	KNOB: "F" SERIES (F10) LEVER: "F" SERIES (F10) DEADBOLT: "B" SERIES (B60/62)
SCHLAGE	HANDLE SET W/DEADBOLT: "F" SERIES (F60)

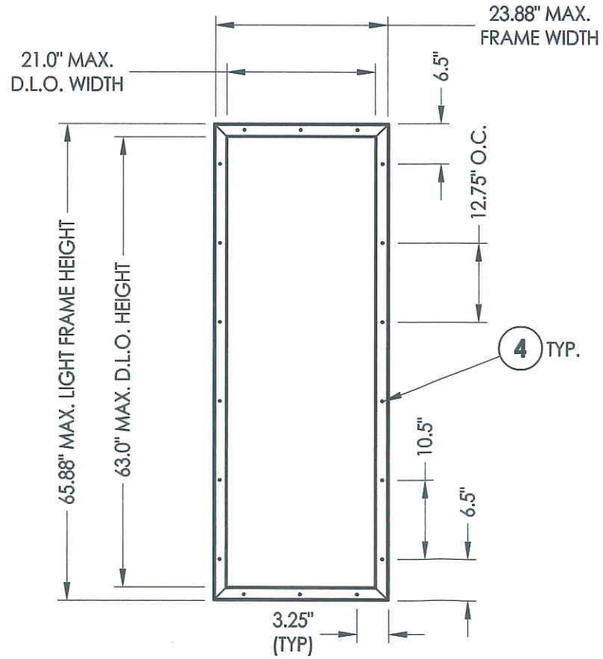

ODL LITE FRAME

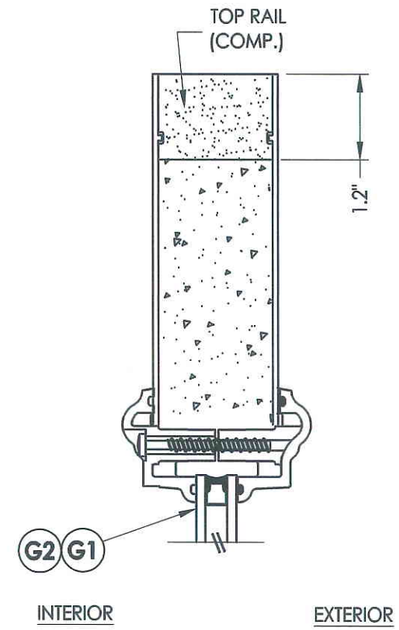

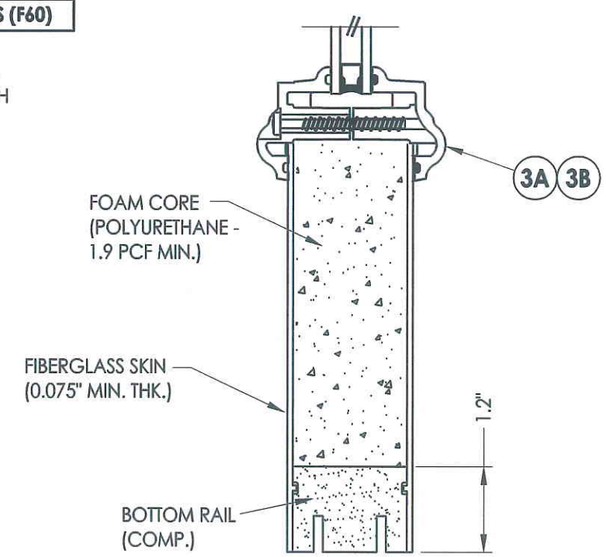

2/2 **VERTICAL CROSS SECTION**

STATE OF TEXAS
LYNDON F. SCHMIDT
104123
LICENSED
PROFESSIONAL ENGINEER

Documents Prepared By: Lyndon F. Schmidt, P.E.
TEXAS P.E. #104123
RW BUILDING CONSULTANTS, INC.
P.O. Box 230 Valrico FL. 33595
Phone No.: 813.659.9197
TEXAS BOARD OF PROFESSIONAL ENGINEERS
CERTIFICATE OF REGISTRATION # F-11852

PRODUCT: PLASTPRO FIBERGLASS DOOR

PART OR ASSEMBLY: DOOR PANEL DETAILS

NO.	DATE	REVISIONS	BY

DATE: 1/17/11
SCALE: N.T.S.
DWG. BY: JK
CHK. BY: LFS
DRAWING NO.: TX-4121
SHEET 2 OF 11

© 2011 R.W. BUILDING CONSULTANTS INC.

R:\A - Projects\Project Folders\proj 1501 - 1600\PF 1553\D. RWBC Drawings\1.17.11NEW\TX-4116.dwg, 2.2

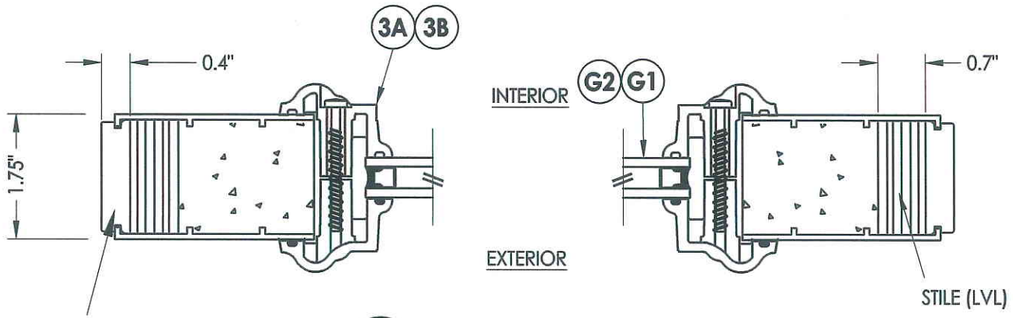

1/3 **HORIZONTAL CROSS SECTION**

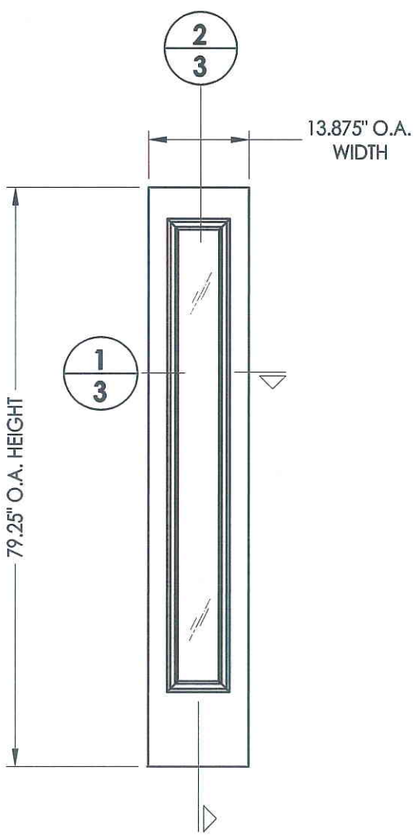

50 **SIDELITE PANEL**
Plastpro Fiberglass

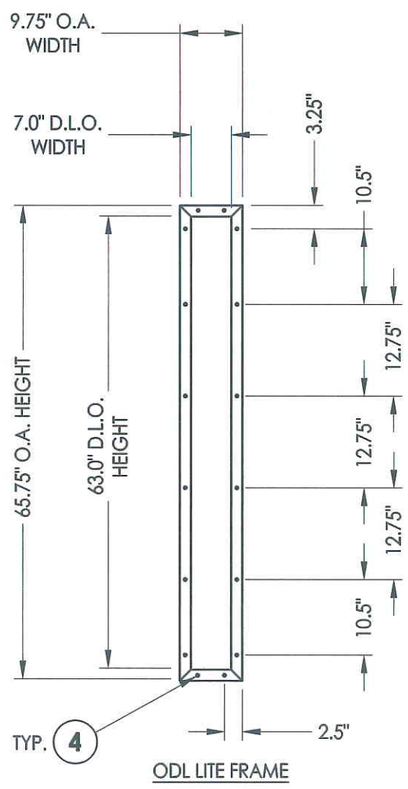

ODL LITE FRAME

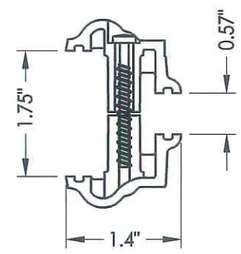

3A **ODL LITE FRAME**
HP Polypropylene
1/2" I.G.

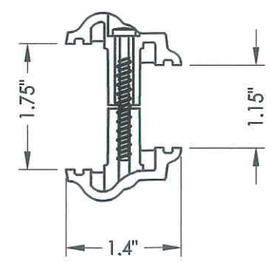

3B **ODL LITE FRAME**
HP Polypropylene
1" I.G.

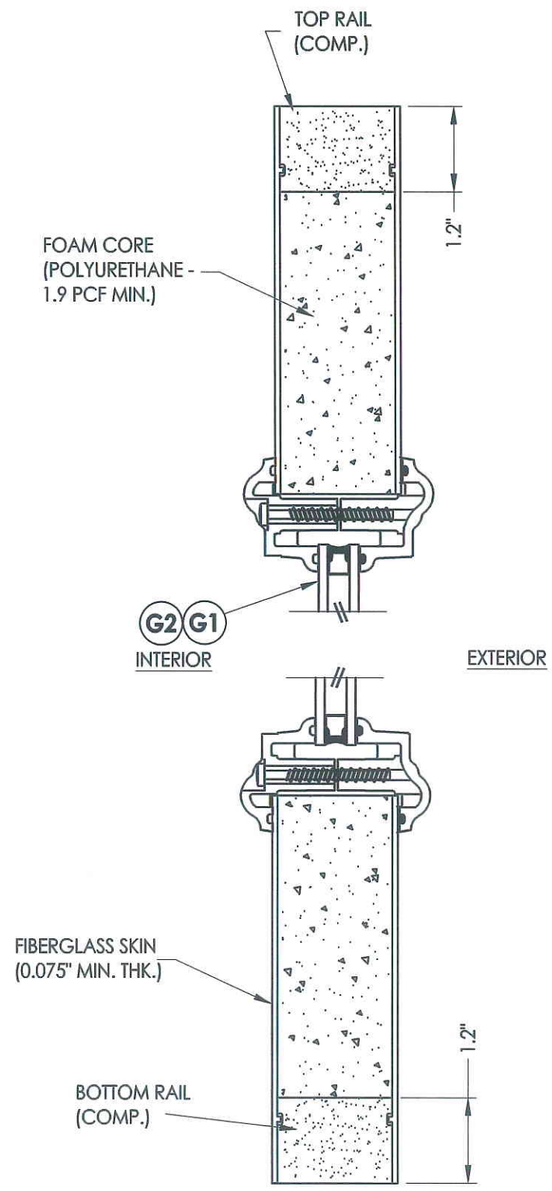

2/3 **VERTICAL CROSS SECTION**

STATE OF TEXAS
LYNDON F. SCHMIDT
104123
LICENSED PROFESSIONAL ENGINEER

Documents Prepared By: Lyndon F. Schmidt, P.E.
TEXAS P.E. #104123

RW BUILDING CONSULTANTS, INC.
P.O. Box 230 Valrico FL. 33595
Phone No.: 813.659.9197

TEXAS BOARD OF PROFESSIONAL ENGINEERS
CERTIFICATE OF REGISTRATION # F-11852

PRODUCT: *PLASTPRO FIBERGLASS DOOR*

PART OR ASSEMBLY: *SIDELITE PANEL DETAILS*

NO.	DATE	REVISIONS	BY

DATE: 1/17/11
SCALE: N.T.S.
DWG. BY: JK
CHK. BY: LFS
DRAWING NO.: TX-4121
SHEET 3 OF 11

© 2011 R.W. BUILDING CONSULTANTS INC.

R:\A - Projects\Project Folders\proj 1501 - 1600\PF 1553\D. RWBC Drawings\1.17.11NEW\TX-4116.dwg, 3.2

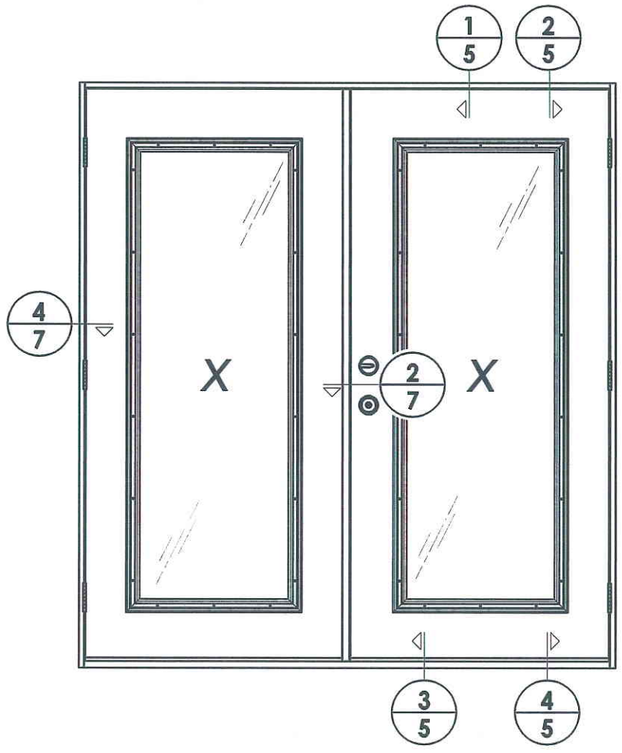

ELEVATION (XX)

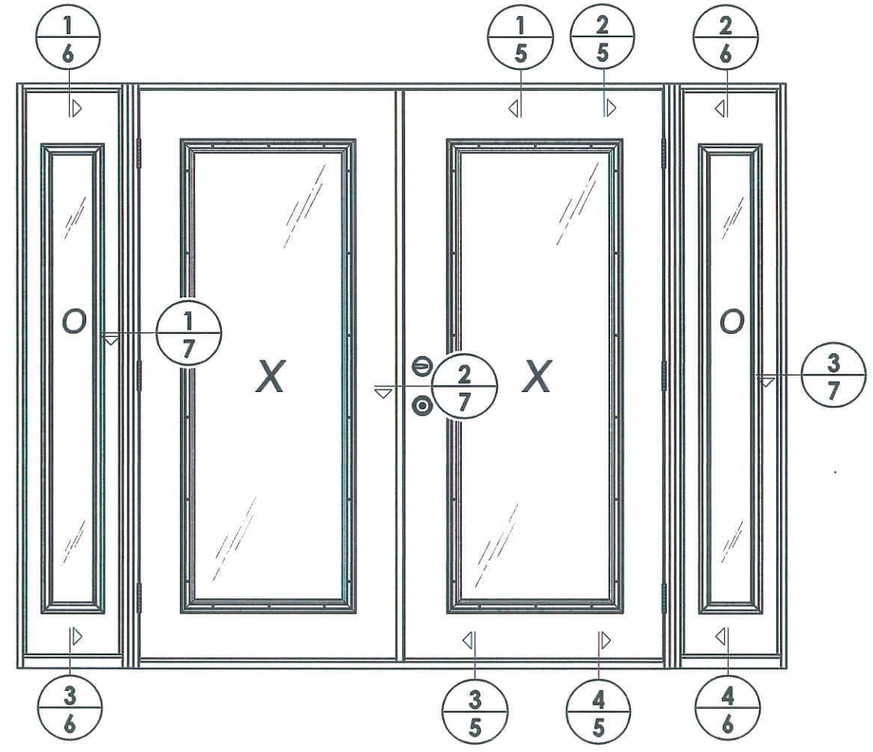

ELEVATION (OXXO)

STATE OF TEXAS
LYNDON F. SCHMIDT
104123
LICENSED PROFESSIONAL ENGINEER
2.1.11

Documents Prepared By: Lyndon F. Schmidt, P.E.
TEXAS P.E. #104123

RW BUILDING CONSULTANTS, INC.
P.O. Box 230 Valrico FL. 33595
Phone No.: 813.659.9197

TEXAS BOARD OF PROFESSIONAL ENGINEERS
CERTIFICATE OF REGISTRATION # F-11852

PRODUCT: PLASTPRO FIBERGLASS DOOR

PART OR ASSEMBLY: ELEVATIONS

NO.	DATE	BY

REVISIONS

DATE: 1/17/11
SCALE: N.T.S.
DWG. BY: JK
CHK. BY: LFS
DRAWING NO.: TX-4121
SHEET 4 OF 11

© 2011 R.W. BUILDING CONSULTANTS INC.

R:\A - Projects\Project Folders\proj 1501 - 1600\PF 1553\D. RWBC Drawings\1.17.11NEW\TX-4116.dwg, 4.2

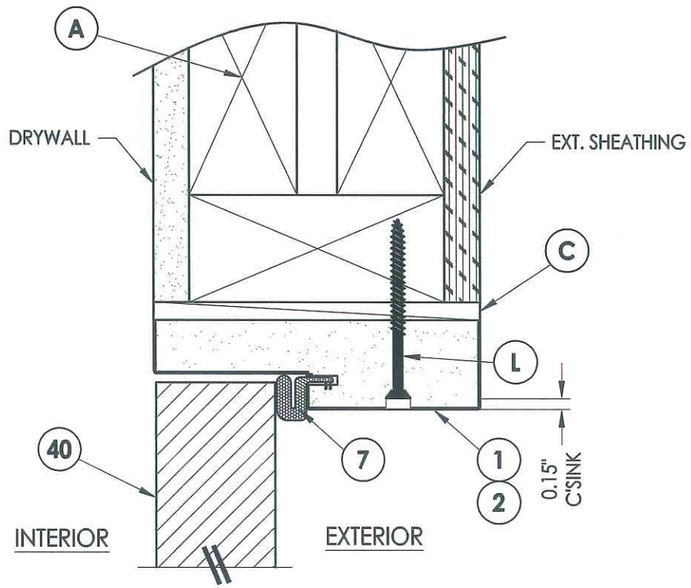

1/5 VERTICAL CROSS SECTION
Inswing shown

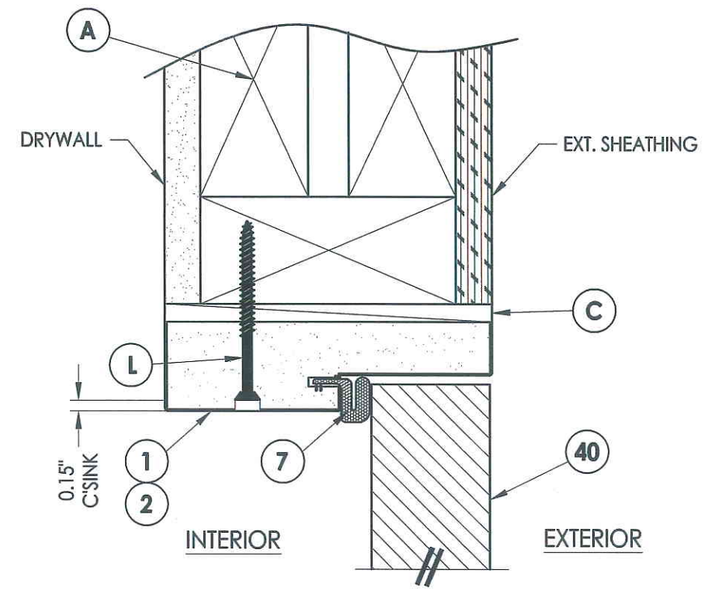

2/5 VERTICAL CROSS SECTION
Outswing shown

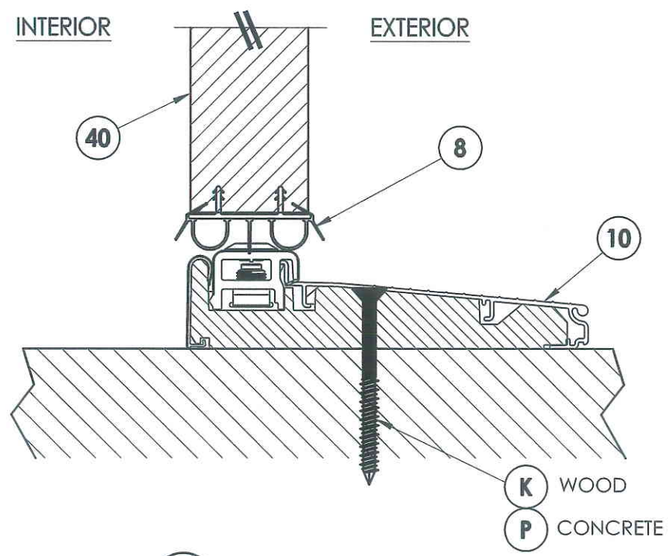

3/5 VERTICAL CROSS SECTION
Inswing shown

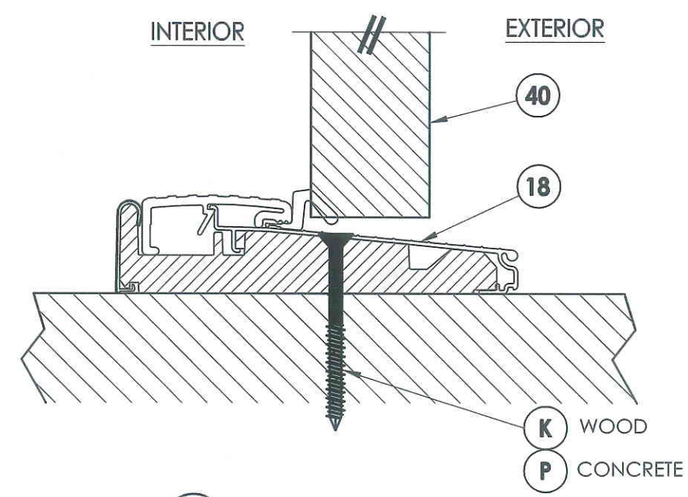

4/5 VERTICAL CROSS SECTION
Outswing shown

STATE OF TEXAS
LYNDON F. SCHMIDT
104123
LICENSED PROFESSIONAL ENGINEER

Documents Prepared By: Lyndon F. Schmidt, P.E.
TEXAS P.E. #104123

RW BUILDING CONSULTANTS, INC.
P.O. Box 230 Valrico FL. 33595
Phone No.: 813.659.9197

TEXAS BOARD OF PROFESSIONAL ENGINEERS
CERTIFICATE OF REGISTRATION # F-11852

PRODUCT: PLASTPRO FIBERGLASS DOOR

PART OR ASSEMBLY: VERTICAL CROSS SECTIONS

NO.	DATE	BY

REVISIONS

DATE: 1/17/11
SCALE: N.T.S.
DWG. BY: JK
CHK. BY: LFS
DRAWING NO.: TX-4121
SHEET 5 OF 11

© 2011 R.W. BUILDING CONSULTANTS INC.

R:\A - Projects\Project Folders\proj 1501 - 1600\PF 1553\D. RWBC Drawings\1.17.11NEW\TX-4116.dwg, 5.2

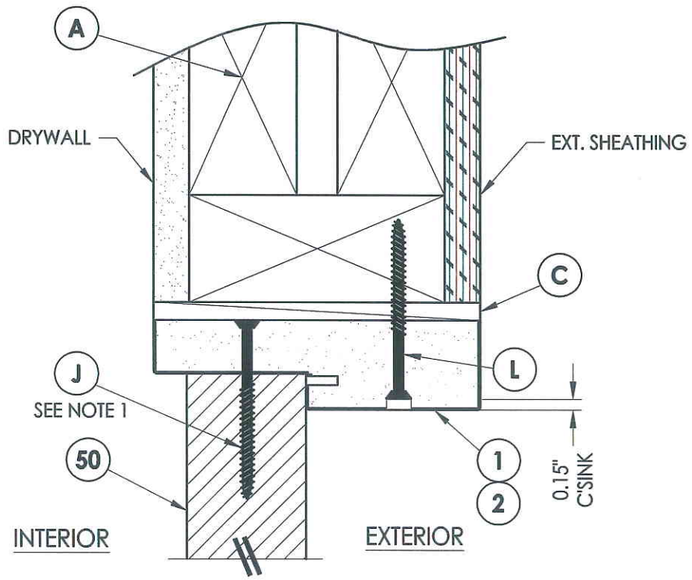

1/6 VERTICAL CROSS SECTION
Inswing shown

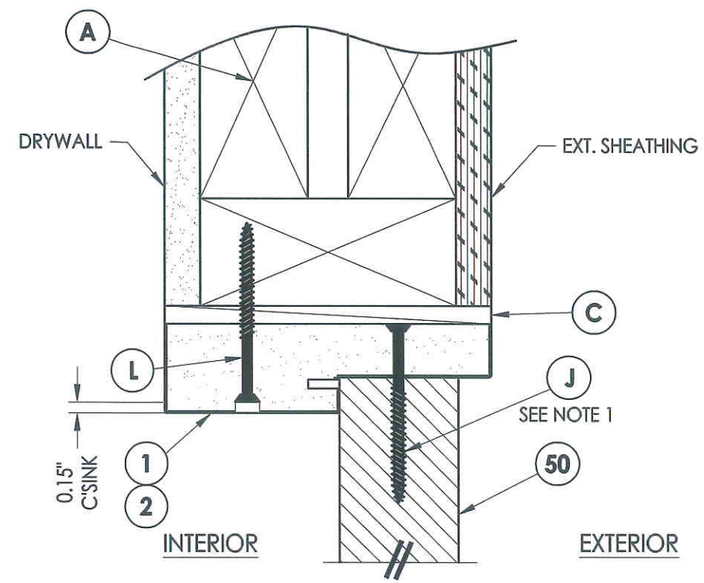

2/6 VERTICAL CROSS SECTION
Outswing shown

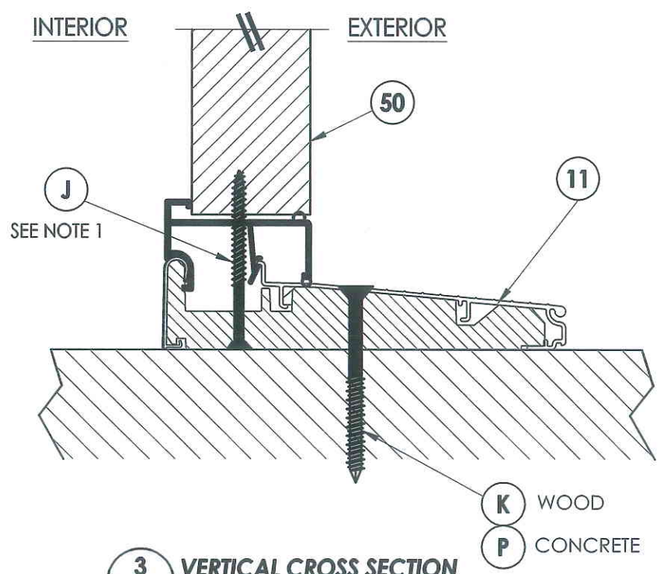

3/6 VERTICAL CROSS SECTION
Inswing shown

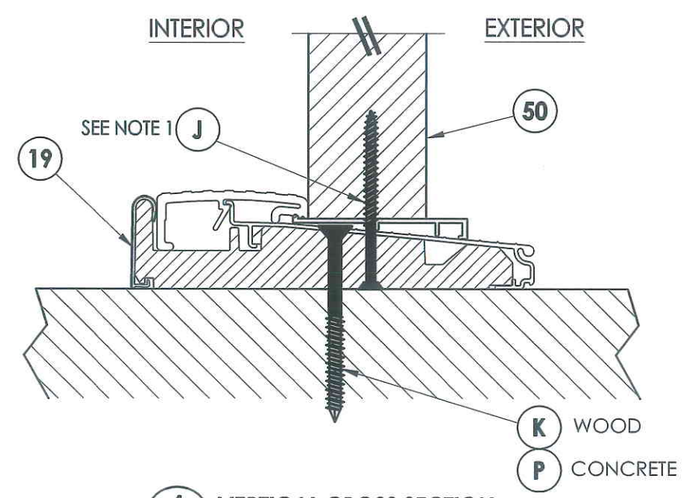

4/6 VERTICAL CROSS SECTION
Outswing shown

NOTE:
1. Spacing for item J: 3.75" from each end.

STATE OF TEXAS
LYNDON F. SCHMIDT
104123
PROFESSIONAL ENGINEER

Documents Prepared By: Lyndon F. Schmidt, P.E.
TEXAS P.E. #104123

RW BUILDING CONSULTANTS, INC.
P.O. Box 230 Valrico FL. 33595
Phone No.: 813.659.9197

TEXAS BOARD OF PROFESSIONAL ENGINEERS
CERTIFICATE OF REGISTRATION # F-11852

PRODUCT: PLASTPRO FIBERGLASS DOOR

PART OR ASSEMBLY: VERTICAL CROSS SECTIONS

NO.	DATE	REVISIONS	BY

DATE: 1/17/11
SCALE: N.T.S.
DWG. BY: JK
CHK. BY: LFS
DRAWING NO.: TX-4121
SHEET 6 OF 11

© 2011 R.W. BUILDING CONSULTANTS INC.

R:\A - Projects\Project Folders\proj 1501 - 1600\PF 1553\D. RWBC Drawings\1.17.11NEW\TX-4116.dwg, 6.2

NOTE:
1. Spacing for item J: 6" from ends and 4 more equally spaced along sidelite (6 total).

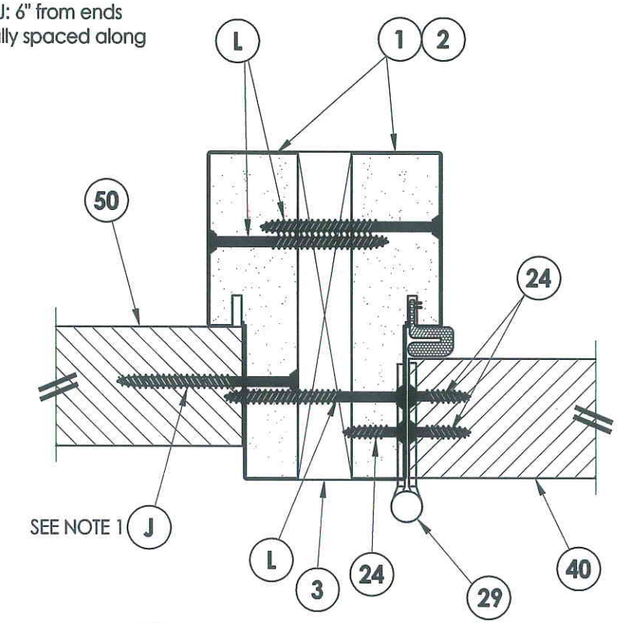

EXTERIOR

INTERIOR

1/7 HORIZONTAL CROSS SECTION
Inswing shown - outswing also approved

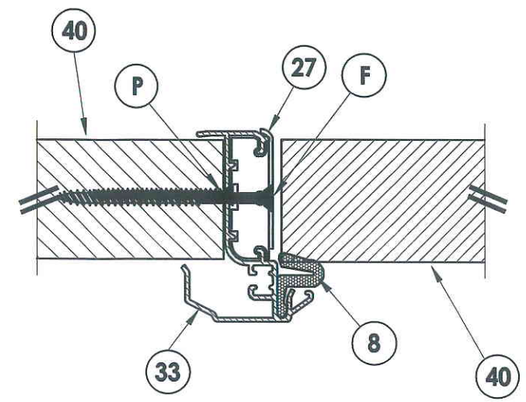

2/7 HORIZONTAL CROSS SECTION
Inswing shown - outswing also approved

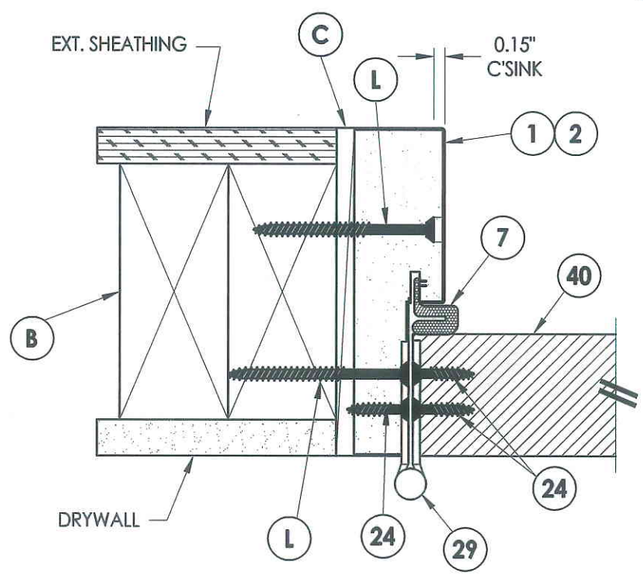

4/7 HORIZONTAL CROSS SECTION
Inswing shown - outswing also approved

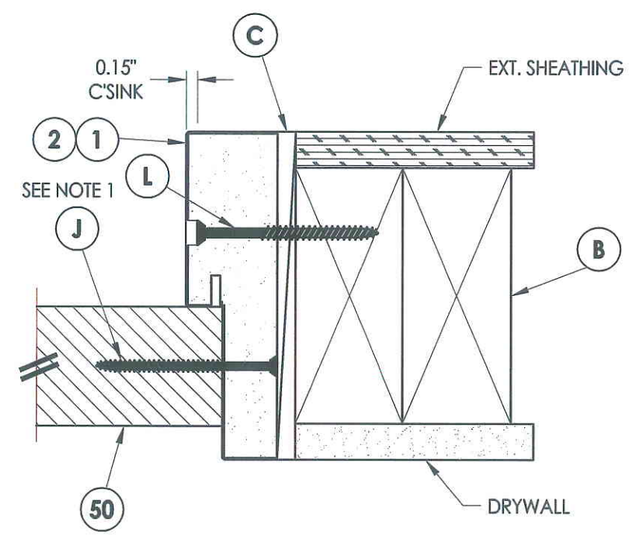

3/7 HORIZONTAL CROSS SECTION
Inswing shown - outswing also approved

STATE OF TEXAS
LYNDON F. SCHMIDT
104123
LICENSED PROFESSIONAL ENGINEER
2-1-11

Documents Prepared By: Lyndon F. Schmidt, P.E.
TEXAS P.E. #104123

RW BUILDING CONSULTANTS, INC.
P.O. Box 230 Valrico FL. 33595
Phone No.: 813.659.9197

TEXAS BOARD OF PROFESSIONAL ENGINEERS
CERTIFICATE OF REGISTRATION # F-11852

PRODUCT: PLASTPRO FIBERGLASS DOOR

PART OR ASSEMBLY: HORIZONTAL CROSS SECTIONS

NO.	DATE	BY

REVISIONS

DATE: 1/17/11
SCALE: N.T.S.
DWG. BY: JK
CHK. BY: LFS
DRAWING NO.: TX-4121
SHEET 7 OF 11

© 2011 R.W. BUILDING CONSULTANTS INC.

R:\A - Projects\Project Folders\proj 1501 - 1600\PF 1553\D. RWBC Drawings\1.17.11NEW\TX-4116.dwg, 7.2

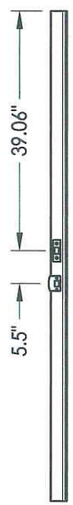

ASTRAGAL STRIKE JAMB

2X FRAMING TO BE DESIGNED BY THE ENGINEER OR ARCHITECT OF RECORD BASED ON WIND LOADS AND THE CLADDING BEING USED.

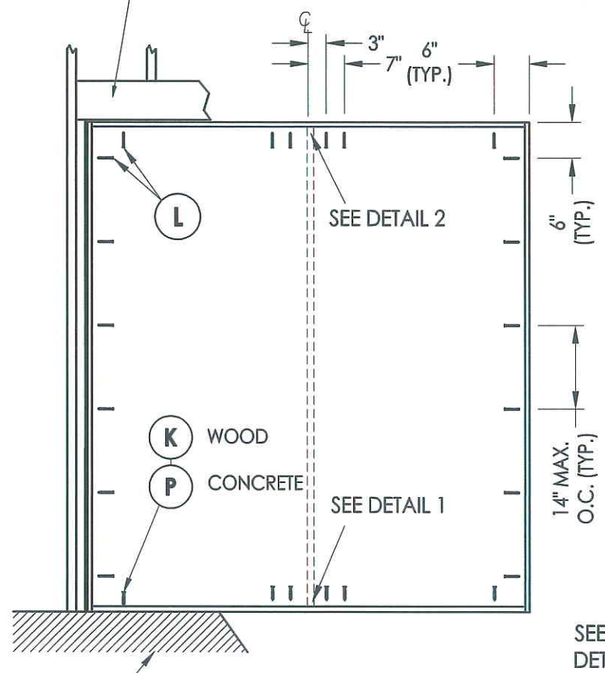

FLOOR SUBSTRATE MATERIAL
CONCRETE (MIN. 3000 PSI)
WOOD (S.G. >= 0.42)

FRAME ANCHORING

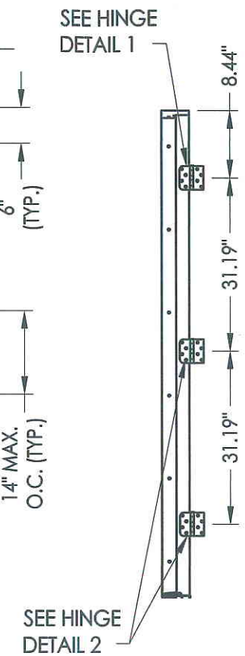

HINGE JAMB

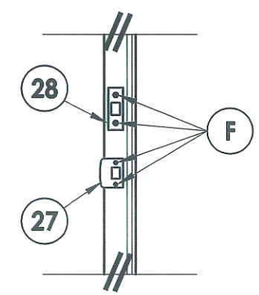

LATCH & DEAD BOLT DETAIL

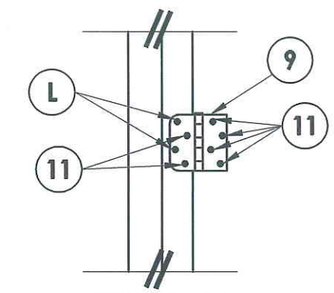

HINGE DETAIL 1

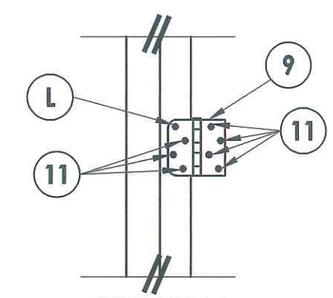

HINGE DETAIL 2

CONCRETE ANCHOR NOTES:

1. *Substitution of equal concrete anchors from a different supplier may have different edge distance and center distance requirements.*
2. *Concrete anchor locations at the corners may be adjusted to maintain the min. edge distance to mortar joints. Concrete anchor locations noted as "MAX. ON CENTER" must be adjusted to maintain the min. edge distance to mortar joints, additional concrete anchors may be required to ensure the "MAX. ON CENTER" dimension are not exceeded.*
3. *Concrete anchor table:*

ANCHOR TYPE	ANCHOR SIZE	MIN. EMBEDMENT	MIN. CLEARANCE TO MASONRY EDGE	MIN. CLEARANCE TO ADJACENT ANCHOR
ITW	1/4"	1-1/4"	2-1/2"	3"
ELCO	1/4"	1-1/4"	1"	4"

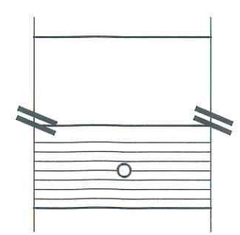

DETAIL 1
Astragal throw bolts at the threshold (Outswing)

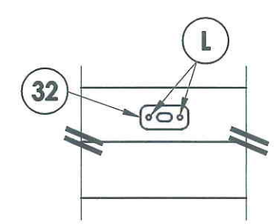

DETAIL 2
Attach astragal throw bolt strike plate to frame as shown

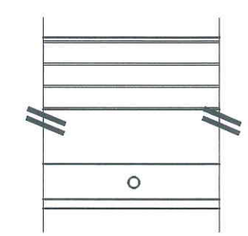

DETAIL 1
Astragal throw bolts at the threshold (Inswing)

STATE OF TEXAS
LYNDON F. SCHMIDT
104123
LICENSED PROFESSIONAL ENGINEER

Documents Prepared By: Lyndon F. Schmidt, P.E.
TEXAS P.E. #104123

RW BUILDING CONSULTANTS, INC.
P.O. Box 230 Valrico FL. 33595
Phone No.: 813.659.9197

TEXAS BOARD OF PROFESSIONAL ENGINEERS
CERTIFICATE OF REGISTRATION # F-11852

PRODUCT: PLASTPRO INC. FIBERGLASS DOOR

PART OR ASSEMBLY: BUCK AND FRAME ANCHORING (XX)

NO.	DATE	REVISIONS	BY

DATE: 1/17/11
SCALE: N.T.S.
DWG. BY: JK
CHK. BY: LFS
DRAWING NO.: TX-4121
SHEET 8 OF 11

© 2011 R.W. BUILDING CONSULTANTS INC.

R:\A - Projects\Project Folders\proj 1501 - 1600\PF 1553\D. RWBC Drawings\1.17.11NEW\TX-4116.dwg, 8.2

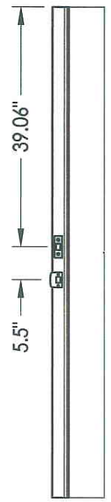

ASTRAGAL STRIKE JAMB

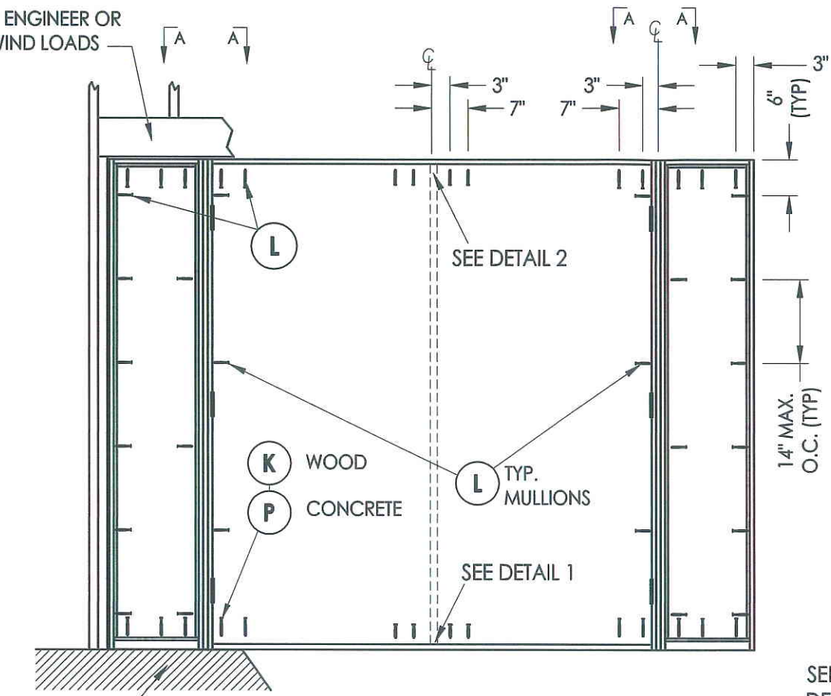

FRAME ANCHORING

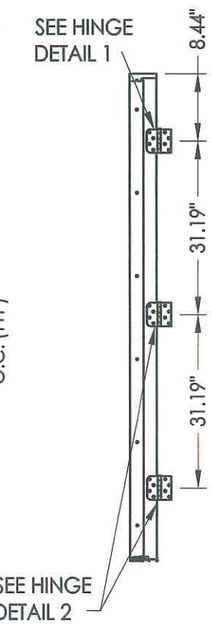

HINGE JAMB

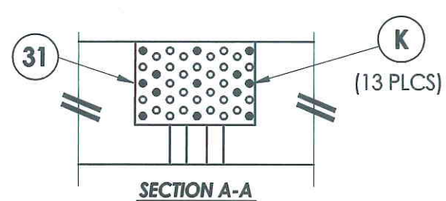

SECTION A-A

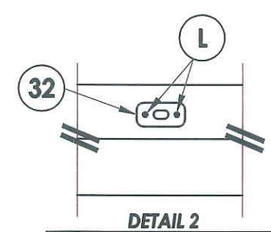

DETAIL 2
Attach astragal throw bolt strike plate to frame as shown

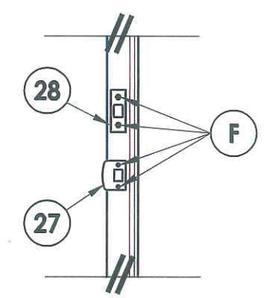

LATCH & DEAD BOLT DETAIL

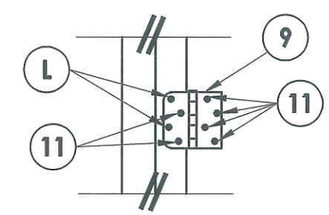

HINGE DETAIL 1

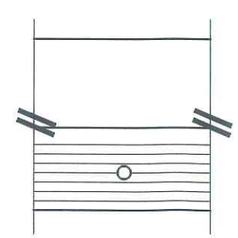

DETAIL 1
Astragal throw bolts at the threshold (Outswing)

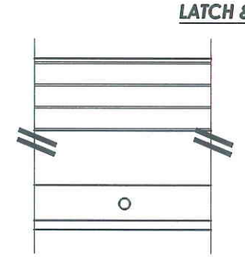

DETAIL 1
Astragal throw bolts at the threshold (Inswing)

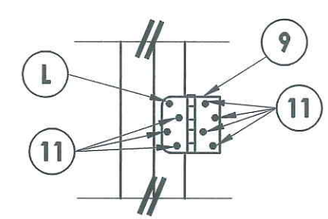

HINGE DETAIL 2

CONCRETE ANCHOR NOTES:

1. *Substitution of equal concrete anchors from a different supplier may have different edge distance and center distance requirements.*
2. *Concrete anchor locations at the corners may be adjusted to maintain the min. edge distance to mortar joints. Concrete anchor locations noted as "MAX. ON CENTER" must be adjusted to maintain the min. edge distance to mortar joints, additional concrete anchors may be required to ensure the "MAX. ON CENTER" dimension are not exceeded.*
3. *Concrete anchor table:*

ANCHOR TYPE	ANCHOR SIZE	MIN. EMBEDMENT	MIN. CLEARANCE TO MASONRY EDGE	MIN. CLEARANCE TO ADJACENT ANCHOR
ITW	1/4"	1-1/4"	2-1/2"	3"
ELCO	1/4"	1-1/4"	1"	4"

Documents Prepared By: Lyndon F. Schmidt, P.E.
TEXAS P.E. #104123

RW BUILDING CONSULTANTS, INC.
P.O. Box 230 Valrico FL. 33595
Phone No.: 813.659.9197

TEXAS BOARD OF PROFESSIONAL ENGINEERS
CERTIFICATE OF REGISTRATION # F-11852

PRODUCT: PLASTPRO FIBERGLASS DOOR

PART OR ASSEMBLY: BUCK AND FRAME ANCHORING (OXXO)

NO.	DATE	REVISIONS	BY

DATE: 1/17/11
SCALE: N.T.S.
DWG. BY: JK
CHK. BY: LFS
DRAWING NO.: TX-4121
SHEET 9 OF 11

© 2011 R.W. BUILDING CONSULTANTS INC.

R:\A - Projects\Project Folders\proj 1501 - 1600\PF 1553\D. RWBC Drawings\1.17.11NEW\TX-4116.dwg, 9.2

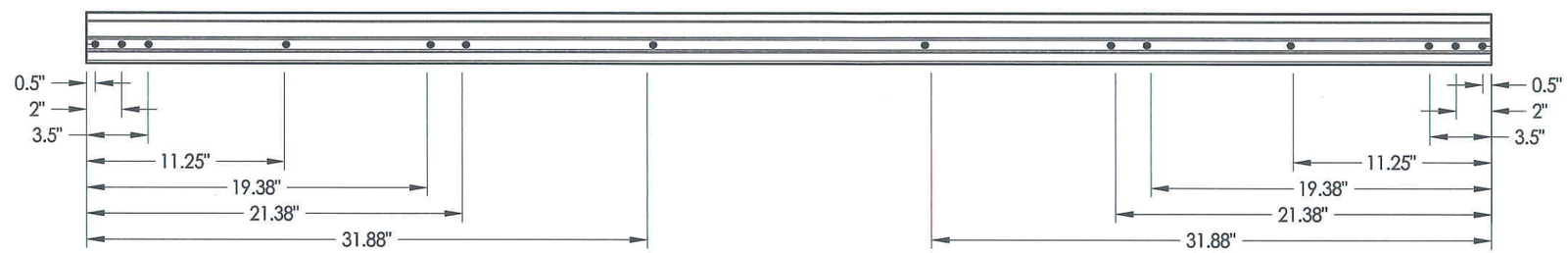

ASTRAGAL SCREW LOCATIONS

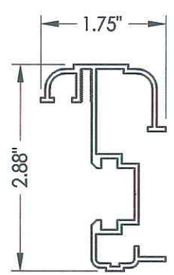

33 **ASTRAGAL**
DLP

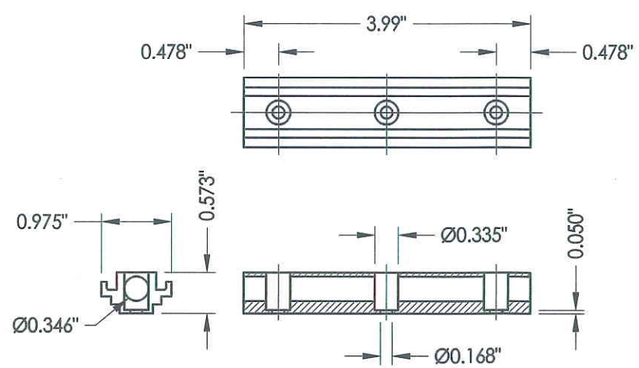

34 **CONCEALED STIFFENER**

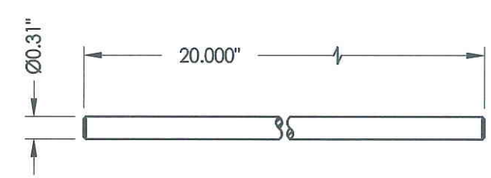

35 **SLIDE BOLT ROD**
Typ. top & bottom
of astragal
top through 1.98"
bottom through 1.98"

STATE OF TEXAS
LYNDON F. SCHMIDT
104123
LICENSED
PROFESSIONAL ENGINEER
2-1-11

Documents Prepared By: Lyndon F. Schmidt, P.E.
TEXAS P.E. #104123

RW BUILDING CONSULTANTS, INC.
P.O. Box 230 Valrico FL. 33595
Phone No.: 813.659.9197

TEXAS BOARD OF PROFESSIONAL ENGINEERS
CERTIFICATE OF REGISTRATION # F-11852

PRODUCT: *PLASTPRO FIBERGLASS DOOR*

PART OR ASSEMBLY: *ASTRAGAL DETAILS*

NO.	DATE	REVISIONS	BY

DATE: 1/17/11
SCALE: N.T.S.
DWG. BY: JK
CHK. BY: LFS
DRAWING NO.: TX-4121
SHEET 10 OF 11

© 2011 R.W. BUILDING CONSULTANTS INC.

R:\A - Projects\Project Folders\proj 1501 - 1600\PF 1553\D. RWBC Drawings\1.17.11NEW\TX-4116.dwg, 10.2

BILL OF MATERIALS

ITEM #	DESCRIPTION	MATERIAL
A	2X HEADER FRAMING SG >= 0.42	WOOD
B	2X BUCK (SG >= 0.55)	WOOD
C	1/4" MAX. SHIM SPACE	-
F	#9 X 3" PFH WOOD SCREW	STEEL
J	#9 X 2-1/2" WOOD SCREW	STEEL
K	#8 X 1-1/4" PFH WOOD SCREW	STEEL
L	#8 X 2-1/2" PFH WOOD SCREW	STEEL
M	#10 X 2-1/2" PFH WOOD SCREW	STEEL
P	1/4" PFH ELCO OR ITW CONCRETE SCREW (1-3/4" MIN. EMB.)	STEEL
1	POLY FIBER JAMB	COMP.
2	WOOD JAMB (FINGER JOINTED PINE)	WOOD
3	ALUM SPACER	ALUM
4	#8 X 1-1/2" PPH SMS	STEEL
5	INT. FRAME	HP POLY
6	EXT. FRAME	HP POLY
7	FORCE 5 WEATHER STRIPPING BY ENDURA	FOAM
8	SWEEP	VINYL
9	4" X 4" BUTT HINGE	ALUMINUM
10	COMPRESSION WEATHER STRIP (QLON)	STEEL
11	#9 X 3/4" PFH WOOD SCREW	STEEL
12	HOMERUN SEALANT	-
13	READISEAL SEALANT	-
27	LATCH STRIKE PLATE	STEEL
28	DEADBOLT STRIKE PLATE	STEEL
31	TIE PLATE	STEEL
32	ASTRAGAL STRIKE PLATE	STEEL
33	EXTRUDED ALUMINUM ASTRAGAL BY DLP	ALUM
34	CONCEALED STIFFENER	ALUM
35	SLIDE BOLT ROD	ALUM
40	DOOR PANEL	-
42	INSWING THRESHOLD w/ SIDELITE ADAPTER	ALUM/COMP
43	OUTSWING THRESHOLD	ALUM/COMP
44	INSWING THRESHOLD	ALUM/COMP
45	OUTSWING THRESHOLD w/ SIDELITE ADAPTER	ALUM/COMP
50	SIDELITE PANEL	-
58	1X REINFORCEMENT (SG >= 0.55)	WOOD

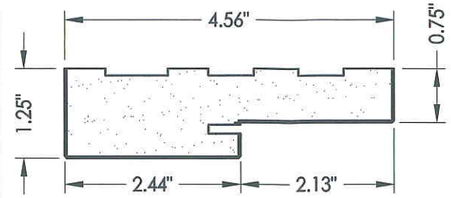

1 POLY FIBER JAMB

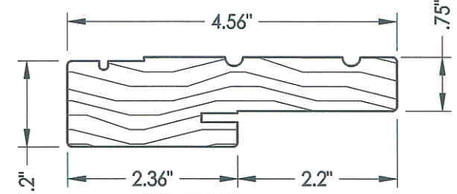

2 WOOD JAMB

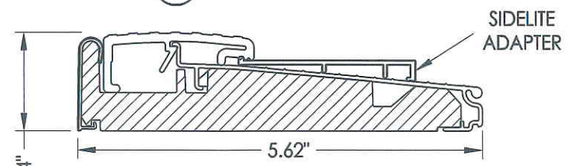

45 OUTSWING THRESHOLD w/ SIDELITE ADAPTER
By Endura

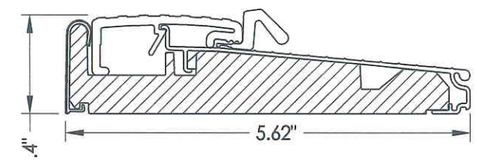

43 OUTSWING THRESHOLD
By Endura

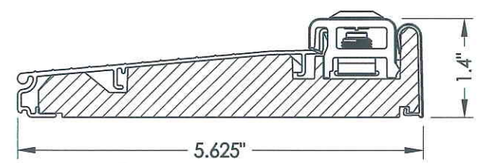

44 INSWING THRESHOLD
By PLASTPRO

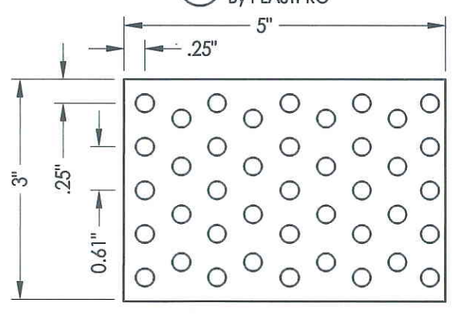

31 TIE PLATE

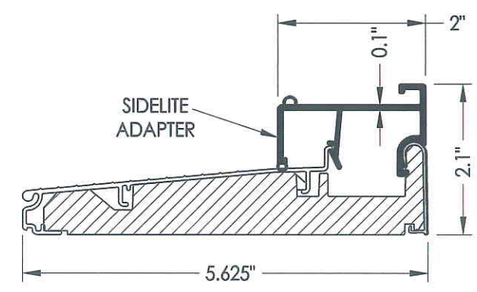

42 INSWING THRESHOLD w/ SIDELITE ADAPTER
By PLASTPRO

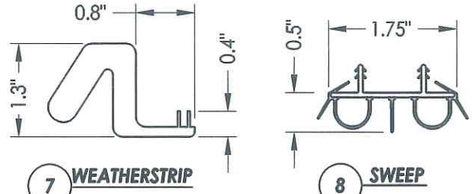

7 WEATHERSTRIP

8 SWEEP

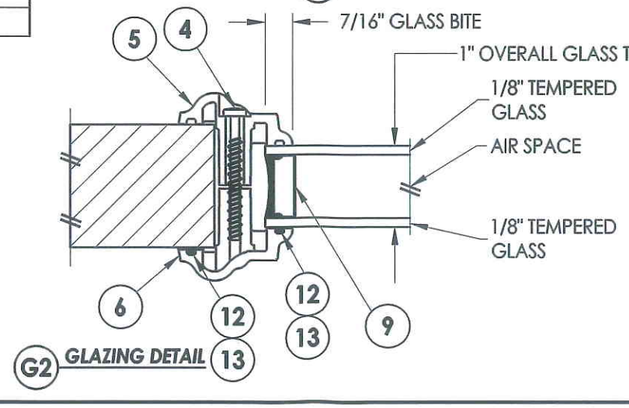

G2 GLAZING DETAIL

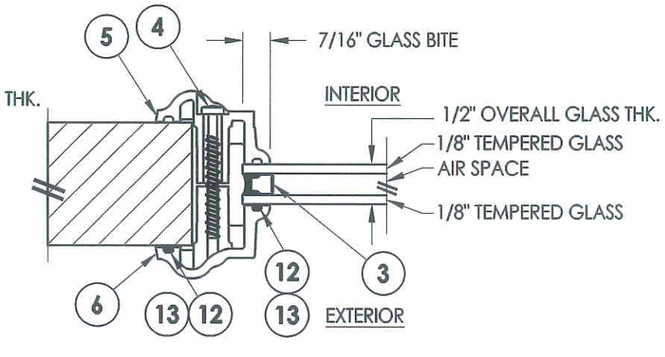

G1 GLAZING DETAIL

STATE OF TEXAS
LYNDON F. SCHMIDT
104123
LICENSED PROFESSIONAL ENGINEER

Documents Prepared By: Lyndon F. Schmidt, P.E.
TEXAS P.E. #104123

RW BUILDING CONSULTANTS, INC.
P.O. Box 230 Valrico FL. 33595
Phone No.: 813.659.9197

TEXAS BOARD OF PROFESSIONAL ENGINEERS
CERTIFICATE OF REGISTRATION # F-11852

PRODUCT: PLASTPRO FIBERGLASS DOOR

PART OR ASSEMBLY: BILL OF MATERIALS, COMPONENTS & GLAZING DETAIL

NO.	DATE	REVISIONS	BY

DATE: 1/17/11
SCALE: N.T.S.
DWG. BY: JK
CHK. BY: LFS
DRAWING NO.: TX-4121
SHEET 11 OF 11

© 2011 R.W. BUILDING CONSULTANTS INC.

R:\A - Projects\Project Folders\proj 1501 - 1600\PF 1553\D. RWBC Drawings\1.17.11NEW\TX-4116.dwg, 11.2