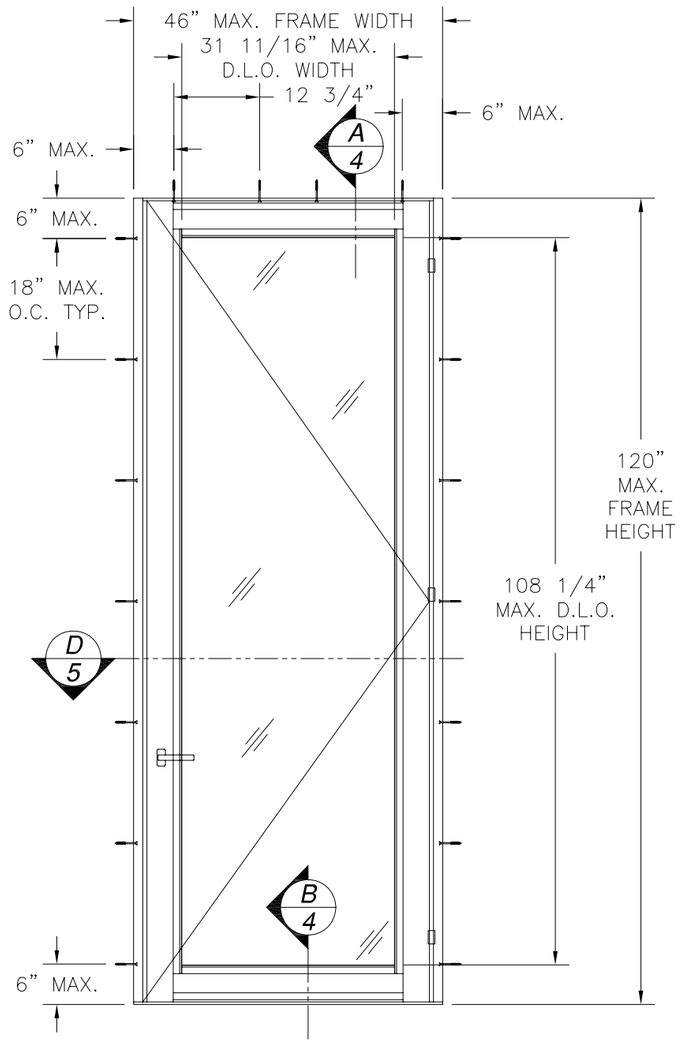

SERIES 9050 THERMALLY BROKEN ALUMINUM
INSWING TERRACE DOOR
WITH STANDARD SILL

STANDARD BOTTOM RAIL SHOWN,
TALL BOTTOM RAIL IS OPTIONAL
EXTERIOR VIEW

DESIGN PRESSURE RATING	*IMPACT RATING*
+100.0 PSF *-120.0 PSF*	*LARGE AND SMALL MISSILE IMPACT*

TABLE OF CONTENTS

SHEET NO.	DESCRIPTION
1 – 2	ELEVATIONS, ANCHORING LAYOUTS AND NOTES
3	BILL OF MATERIALS AND GLAZING OPTIONS
4 – 5	CROSS SECTIONS
4 – 5	CROSS SECTIONS
6 – 13	INSTALLATION DETAILS
14	HARDWARE LAYOUTS
15 – 17	COMPONENTS

REVISIONS

REV	DESCRIPTION	DATE	APPROVED

NOTES:

1) THE PRODUCT SHOWN HEREIN IS DESIGNED AND MANUFACTURED TO COMPLY WITH REQUIREMENTS OF THE 2006 INTERNATIONAL BUILDING CODE AND 2006 INTERNATIONAL RESIDENTIAL CODE WITH TEXAS STATE MODIFICATIONS.
2) WOOD FRAMING AND MASONRY OPENING TO BE DESIGNED AND ANCHORED TO PROPERLY TRANSFER ALL LOADS TO STRUCTURE. FRAMING AND MASONRY OPENING IS THE RESPONSIBILITY OF THE ARCHITECT OR ENGINEER OF RECORD.
3) 1X BUCK OVER MASONRY/CONCRETE IS OPTIONAL. WHERE 1X BUCK IS NOT USED DISSIMILAR MATERIALS MUST BE SEPARATED WITH APPROVED COATING OR MEMBRANE. SELECTION OF COATING OR MEMBRANE IS THE RESPONSIBILITY OF THE ARCHITECT OR ENGINEER OF RECORD.
4) ALLOWABLE STRESS INCREASE OF 1/3 WAS NOT USED IN THE DESIGN OF THE PRODUCT SHOWN HEREIN. WIND LOAD DURATION FACTOR Cd=1.6 WAS USED FOR WOOD ANCHOR CALCULATIONS.
5) FRAME AND PANEL MATERIAL: EXTRUDED THREMALLY BROKEN ALUMINUM 6063–T6 .090" THICK.
6) UNITS MUST BE GLAZED PER ASTM E1300 WITH LARGE MISSILE IMPACT GLASS. SEE SHEET 3 FOR GLAZING OPTIONS.
7) APPROVED IMPACT PROTECTIVE SYSTEM IS NOT REQUIRED FOR THIS PRODUCT IN WIND BORNE DEBRIS REGIONS.
8) SHIM AS REQUIRED AT EACH INSTALLATION ANCHOR WITH LOAD BEARING SHIM. SHIM WHERE SPACE OF 1/16" OR GREATER OCCURS. MAXIMUM ALLOWABLE SHIM STACK TO BE 1/4".
9) FOR ANCHORING INTO CONCRETE/MASONRY USE 1/4" ITW TAPCONS WITH SUFFICIENT LENGTH TO ACHIEVE A 1 1/4" MINIMUM EMBEDMENT INTO SUBSTRATE WITH 2 1/2'' MINIMUM EDGE DISTANCE. LOCATE ANCHORS AS SHOWN IN ELEVATIONS AND INSTALLATION DETAILS.
10) FOR ANCHORING INTO WOOD FRAMING, 2X BUCK OR 2X BACKED 20GA. STEEL FRAMING USE #14 WOOD SCREW WITH SUFFICIENT LENGTH TO ACHIEVE A 1 3/4" MINIMUM EMBEDMENT INTO SUBSTRATE WITH 1" MINIMUM EDGE DISTANCE. LOCATE ANCHORS AS SHOWN IN ELEVATIONS AND INSTALLATION DETAILS.
11) ALL FASTENERS TO BE CORROSION RESISTANT.
12) INSTALLATION ANCHORS SHALL BE INSTALLED IN ACCORDANCE WITH ANCHOR MANUFACTURER'S INSTALLATION INSTRUCTIONS, AND ANCHORS SHALL NOT BE USED IN SUBSTRATES WITH STRENGTHS LESS THAN THE MINIMUM STRENGTH SPECIFIED BELOW:
    A. WOOD – MINIMUM SPECIFIC GRAVITY OF G=0.42
    B. CONCRETE – MINIMUM COMPRESSIVE STRENGTH OF 2,000 PSI.
    C. MASONRY – STRENGTH CONFORMANCE TO ASTM C–90, GRADE N, TYPE 1 (OR GREATER).
    D. STEEL FRAMING – 2X BACKED 20GA., .039" MINIMUM.
13) MAXIMUM PANEL SIZE: 42" x 118 1/2"
14) RIGHT HAND SHOWN. LEFT HAND MODELS ALSO APPROVED.

WinDoor INCORPORATED
7500 AMSTERDAM DRIVE
ORLANDO, FL 32832
Phone: 407.481.8400
Fax: 407.481.0505
www.windoorinc.com

SERIES 9050 THERMALLY BROKEN ALUMINUM
INSWING/OUTSWING TERRACE DOOR – IMPACT
ELEVATION, ANCHORING LAYOUT AND NOTES

DRAWN:	DWG NO.	REV
TJH	08–01153	–

SCALE	DATE	SHEET
NTS	11/10/10	1 OF 17

Luis R. Lomas P.E.
Texas No. 101889

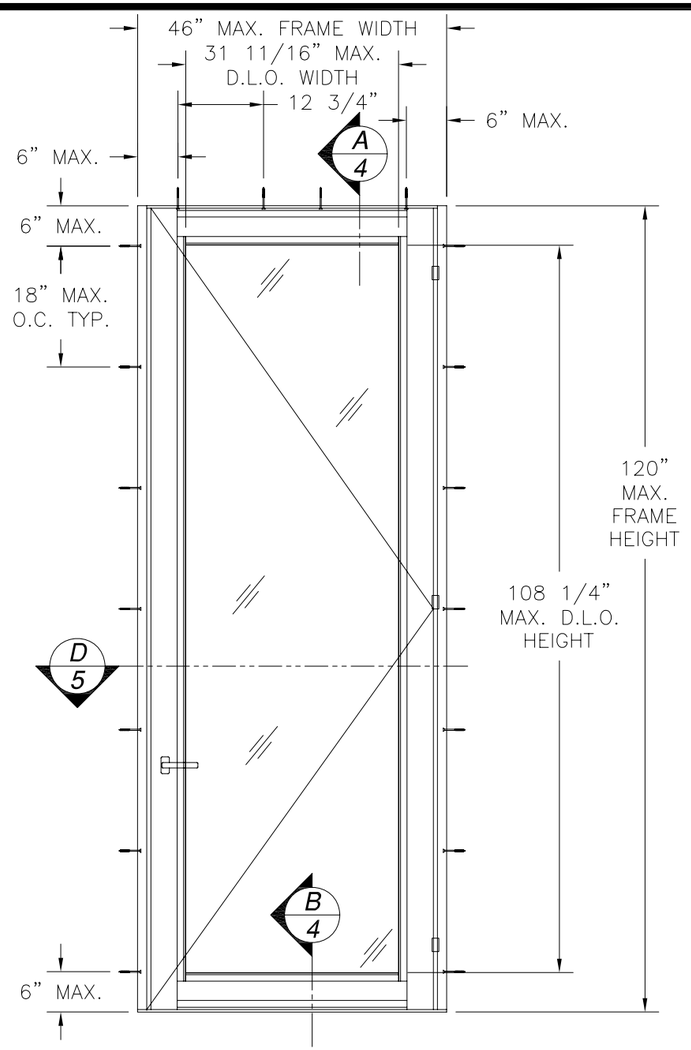

SERIES 9050 THERMALLY BROKEN ALUMINUM OUTSWING TERRACE DOOR WITH STANDARD SILL

STANDARD BOTTOM RAIL SHOWN, TALL BOTTOM RAIL OPTIONAL

EXTERIOR VIEW

DESIGN PRESSURE RATING	IMPACT RATING
+100.0 PSF -120.0 PSF	LARGE AND SMALL MISSILE IMPACT

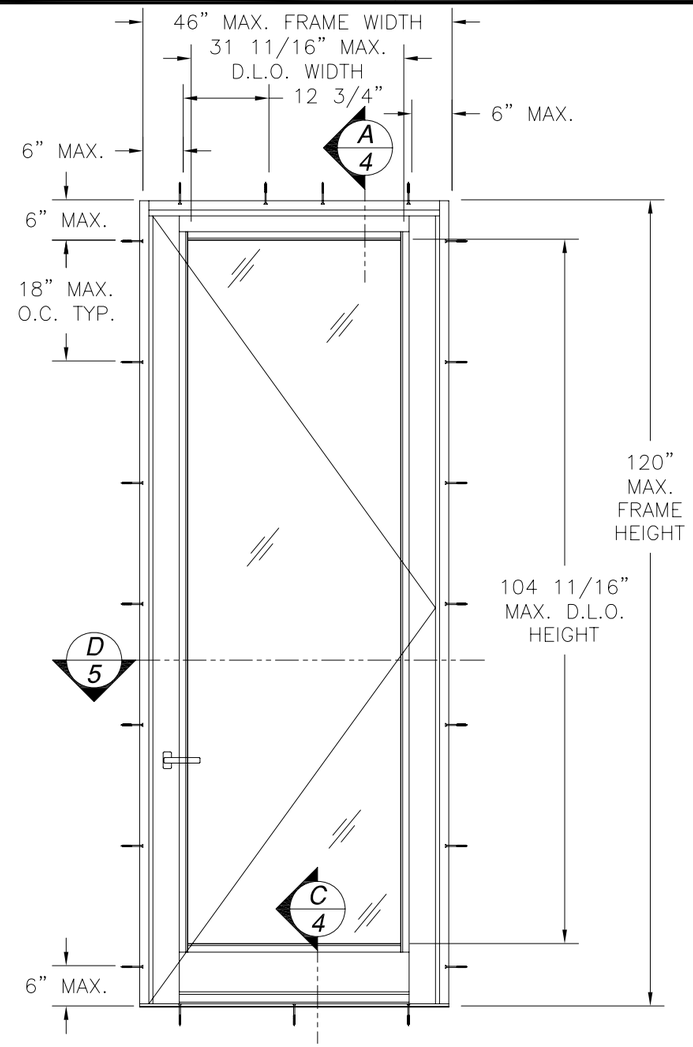

SERIES 9050 THERMALLY BROKEN ALUMINUM INSWING/OUTSWING TERRACE DOOR WITH ADA SILL

EXTERIOR VIEW

DESIGN PRESSURE RATING	IMPACT RATING
+80.0 PSF -110.0 PSF	LARGE AND SMALL MISSILE IMPACT

REVISIONS			
REV	DESCRIPTION	DATE	APPROVED

WinDoor INCORPORATED
7500 AMSTERDAM DRIVE
ORLANDO, FL 32832
Phone: 407.481.8400
Fax: 407.481.0505
www.windoorinc.com

SERIES 9050 THERMALLY BROKEN ALUMINUM INSWING/OUTSWING TERRACE DOOR – IMPACT ELEVATIONS AND ANCHORING LAYOUTS

DRAWN:	DWG NO.	REV
TJH	08-01153	–
SCALE NTS	DATE 11/10/10	SHEET 2 OF 17

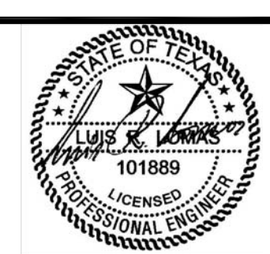

Luis R. Lomas P.E.
Texas No. 101889

REVISIONS			
REV	DESCRIPTION	DATE	APPROVED

PARTS LIST

NO.	PART NUMBER	DESCRIPTION	MANUFACTURER	MATERIAL
1	905A11	FRAME JAMB ASS'Y OUT/INSWING	KEYMARK	ALUMINUM 6063-T6
2	905A12	FRAME HEAD & STANDARD SILL ASS'Y	KEYMARK	ALUMINUM 6063-T6
3	S46079	ADA SILL ASS'Y	KEYMARK	ALUMINUM 6063-T6
4	905A03	STILE ASS'Y OUTSWING	KEYMARK	ALUMINUM 6063-T6
5	905A04	STILE ASS'Y INSWING	KEYMARK	ALUMINUM 6063-T6
6	905A05	TOP & BOTTOM RAIL ASS'Y OUTSWING	KEYMARK	ALUMINUM 6063-T6
7	905A06	TOP & BOTTOM RAIL ASS'Y INSWING	KEYMARK	ALUMINUM 6063-T6
8	905A07	TALL BOTTOM RAIL ASS'Y OUTSWING	KEYMARK	ALUMINUM 6063-T6
9	905A08	TALL BOTTOM RAIL ASS'Y INSWING	KEYMARK	ALUMINUM 6063-T6
10	905A09	ADA BOTTOM RAIL ADAPTER ASS'Y	KEYMARK	ALUMINUM 6063-T6
11	S46080	EURO FRAME GROOVE COVER	KEYMARK	ALUMINUM 6063-T6
12	S46085	JAMB & HEAD COVER PLATE	KEYMARK	ALUMINUM 6063-T6
13	S46086	STANDARD SILL COVER PLATE	KEYMARK	ALUMINUM 6063-T6
14	S46084	GLASS STOP 1.25	KEYMARK	ALUMINUM 6063-T6
15	52105	SPONGE WITH ADHESIVE BACK		EDPM
16	00598N	FLASH XXL DOOR HINGE	GIESSE	
17	00599	HINGE COVER	GIESSE	
18	04650	LEVER ACTIVATED GEAR BOX - 45MM	GIESSE	
19	4637	6131 W/KEY & THUMB TURN	GIESSE	
20	4636	3161 W/ KEY & THUMB TURN	GIESSE	
21	02472	PRIMA COUPLE DOOR HANDLE	GIESSE	
22	1315-MC2	LOCKING PLATES	ADVANTAGE MFG.	
23	1335-1	EUROGROOVE KEEPERS	ADVANTAGE MFG.	
24	04019	CORNER DRIVE	GIESSE	
25	04655	STRIKE PLATE	GIESSE	
26	01362N	ADJUSTABLE STRIKER	GIESSE	
27	03524	CONNECTING ROD	GIESSE	
28	1445	SNUBBER DRIVE	ADVANTAGE MFG.	
29		LMI GLAZING		
30	TP1046	#7 GLAZING VINYL		VINYL
31		#8 x 1" PH SQ. DR. L-POINT		STAINLESS STEEL
32		#8 x 1" PFH SMS SCREW		STAINLESS STEEL
33	131022	#10 x 1 1/4" PH SQ. DR. L-POINT		STAINLESS STEEL
34		#10 x1 1/4" PFH SELF DRILLING		STAINLESS STEEL
35	5-3820-RB-1	STILE & RAIL FLANGE WEATHERSTRIP	LAUREN MFG.	
36	4-2709	TOP & BOTTOM RAIL WEATHERSTRIP	LAUREN MFG.	
37	905VP-22-SEAL	SPONGE SEAL	LAUREN MFG.	EDPM
38	905VX-19	STRUT COVER IS	LAUREN MFG.	EDPM
39	905VX-18	STRUT COVER OS	LAUREN MFG.	EDPM
40	8303-01-00	FLEX COEX BOTTOM SWEEP	TRELLBORG	RIGID PVC

PARTS LIST

NO.	PART NUMBER	DESCRIPTION	MANUFACTURER	MATERIAL
41	TP-448	FILLER STRIP	TEAM PLASTICS	PVC 92 DUROMETER
42		GLASS SHIM 1/4" x 3/4" x 1"		NEOPRENE 80D
43	FG0015011	#3 S OR EQUIVALENT JOINT SEALANT	C.R. LAWRENCE	SILICONE
44	SIKAFAST552	GLAZING COMPOUND	SIKA CORP.	URETHANE
45		#10 x 3/4" PPH SCREW		STAINLESS STEEL
46		#10 x 1 1/2" PPH SCREW		STAINLESS STEEL
47		#10 x 2" FH TEK SCREW		STAINLESS STEEL
48		14mm STRUT	TECHNOFORM US	POLYMIDE 66
49		20mm STRUT	TECHNOFORM US	POLYMIDE 66
50	S46083	GLASS STOP 1.625	KEYMARK	ALUMINUM 6063-T6

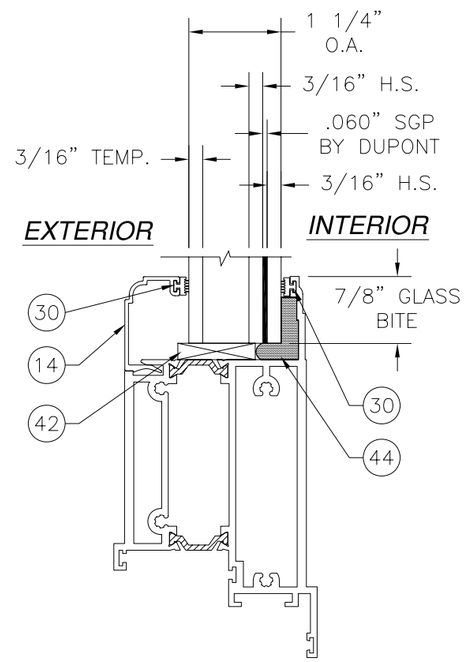

GLAZING A

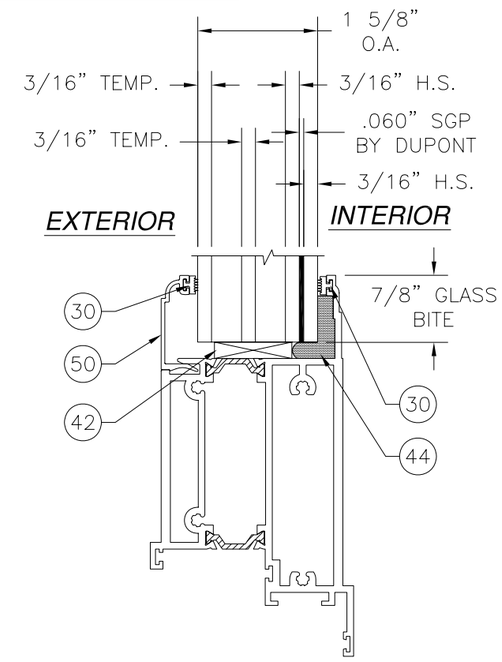

GLAZING B

WinDoor INCORPORATED
7500 AMSTERDAM DRIVE
ORLANDO, FL 32832
Phone: 407.481.8400
Fax: 407.481.0505
www.windoorinc.com

SERIES 9050 THERMALLY BROKEN ALUMINUM INSWING/OUTSWING TERRACE DOOR - IMPACT
BILL OF MATERIALS AND GLAZING DETAILS

DRAWN:	DWG NO.	REV
TJH	08-01153	-

SCALE	DATE	SHEET
NTS	11/10/10	3 OF 17

Luis R. Lomas P.E.
Texas No. 101889

REVISIONS			
REV	DESCRIPTION	DATE	APPROVED

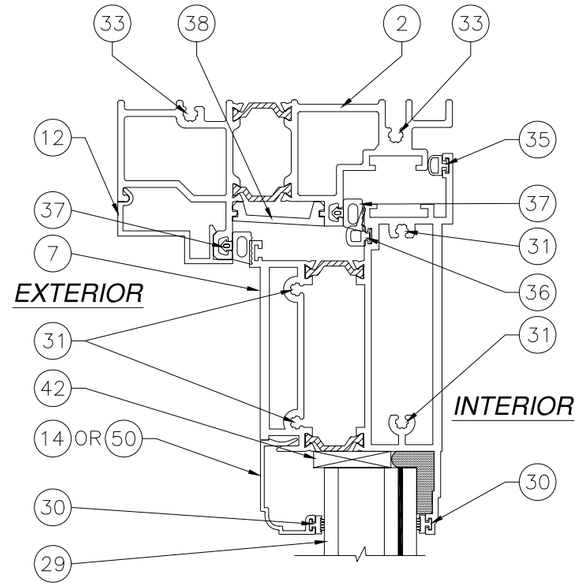

A/4 VERTICAL CROSS SECTION
INSWING UNIT

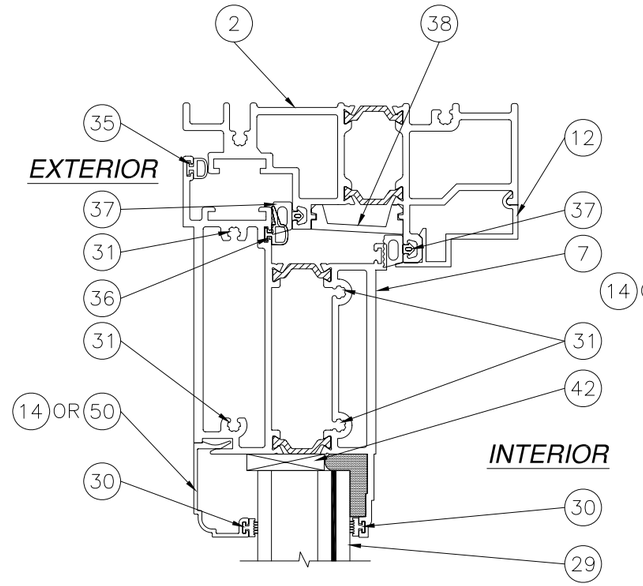

A/4 VERTICAL CROSS SECTION
OUTSWING UNIT

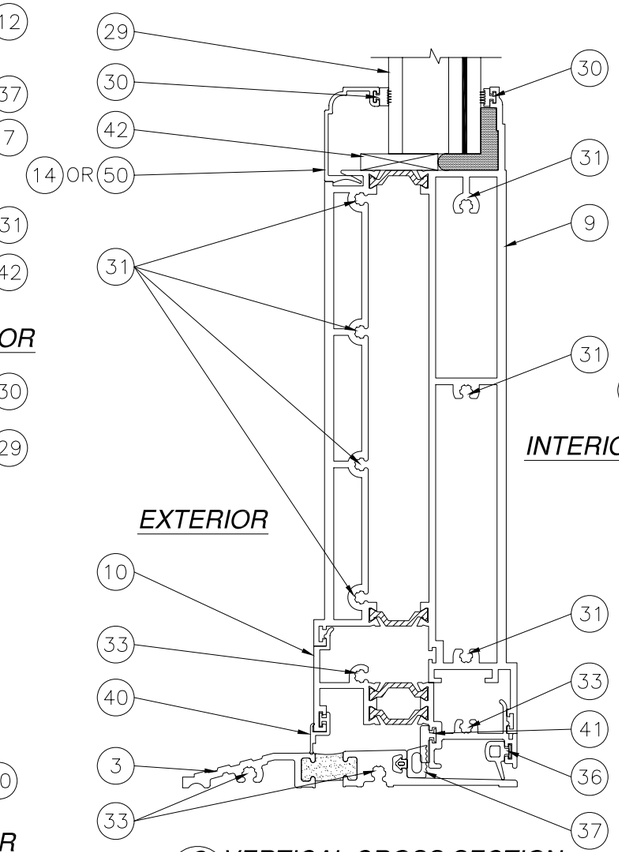

C/4 VERTICAL CROSS SECTION
INSWING UNIT WITH ADA SILL

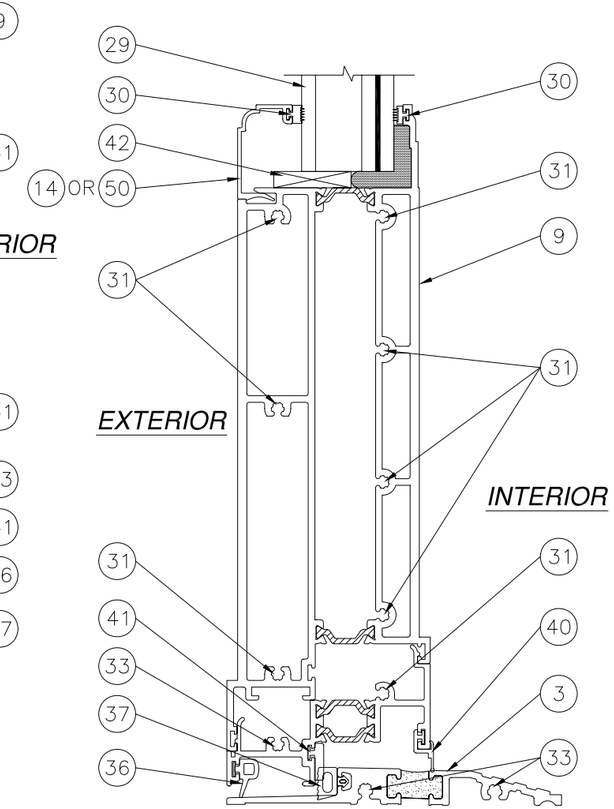

C/4 VERTICAL CROSS SECTION
OUTSWING UNIT WITH ADA SILL

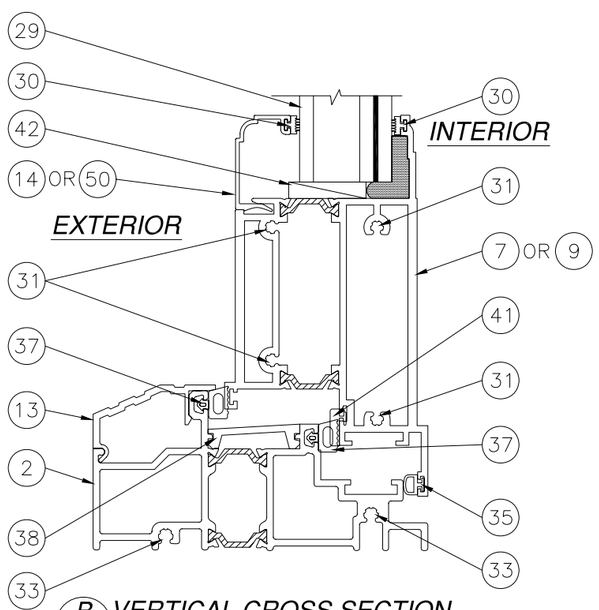

B/4 VERTICAL CROSS SECTION
INSWING UNIT WITH STANDARD SILL
STANDARD BOTTOM RAIL SHOWN,
TALL BOTTOM RAIL OPTIONAL

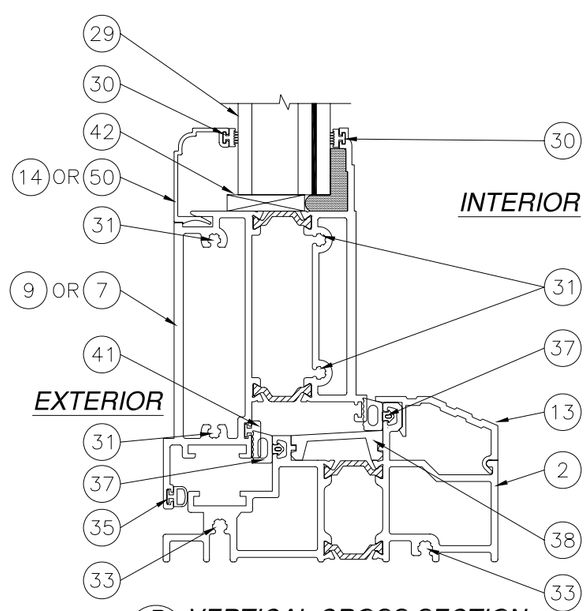

B/4 VERTICAL CROSS SECTION
OUTSWING UNIT WITH STANDARD SILL
STANDARD BOTTOM RAIL SHOWN,
TALL BOTTOM RAIL OPTIONAL

WinDoor INCORPORATED
7500 AMSTERDAM DRIVE
ORLANDO, FL 32832
Phone: 407.481.8400
Fax: 407.481.0505
www.windoorinc.com

SERIES 9050 THERMALLY BROKEN ALUMINUM
INSWING/OUTSWING TERRACE DOOR – IMPACT
VERTICAL CROSS SECTINS

DRAWN:	DWG NO.	REV
TJH	08-01153	–

SCALE	DATE	SHEET
NTS	11/10/10	4 OF 17

STATE OF TEXAS
LUIS R. LOMAS
101889
LICENSED
PROFESSIONAL ENGINEER

Luis R. Lomas P.E.
Texas No. 101889

REVISIONS			
REV	DESCRIPTION	DATE	APPROVED

FRAME CONSTRUCTION:
FRAME CORNERS ARE COPED AND BUTTED. JAMBS ARE ATTACHED TO HEAD, STANDARD SILL AND ADA SILL USING (2) #10 x 1 1/4" PH SQUARE DRIVE LEAD POINT SS SCREWS AT EACH CORNER.

PANEL CONSTRUCTION:
STANDARD BOTTOM RAIL IS ATTACHED TO STILES WITH (4) #8 x 1" PH SQUARE DRIVE LEAD POINT SS SCREWS, (2) AT INTERIOR EXTRUSION AND (2) AT EXTERIOR EXTRUSION.

TALL BOTTOM RAIL IS ATTACHED TO STILES WITH (7) #8 x 1" PH SQUARE DRIVE LEAD POINT SS SCREWS, (4) AT INTERIOR EXTRUSION AND (3) AT EXTERIOR EXTRUSION.

TOP RAIL IS ATTACHED TO STILES WITH (4) #8 x 1" PH SQUARE DRIVE LEAD POINT SS SCREWS, (2) AT INTERIOR EXTRUSION AND (2) AT EXTERIOR EXTRUSION.

WHEN ADA SILL IS USED BOTTOM RAIL IS FITTED WITH ADA SILL ADAPTER. SILL ADAPTER IS SNAP FIT TO BOTTOM RAIL AND ATTACHED TO STILES WITH (2) #8 x 1" PH SQUARE DRIVE LEAD POINT SS SCREWS.

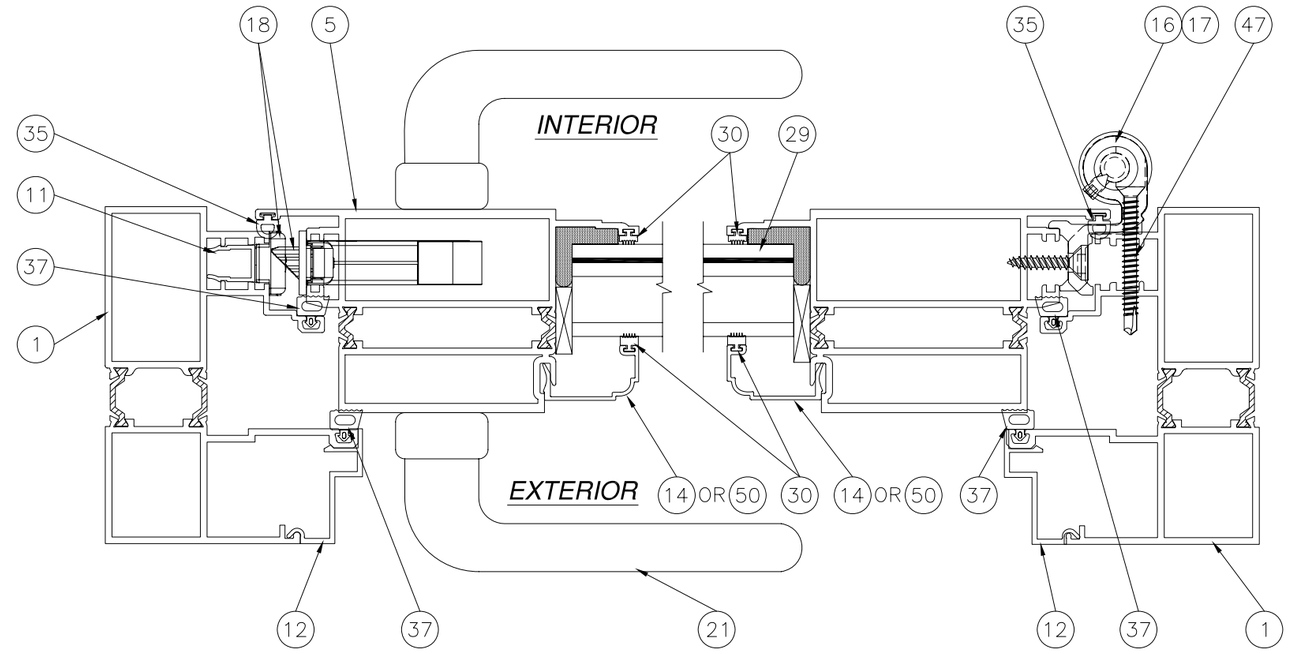

D/5 HORIZONTAL CROSS SECTION
INSWING UNIT

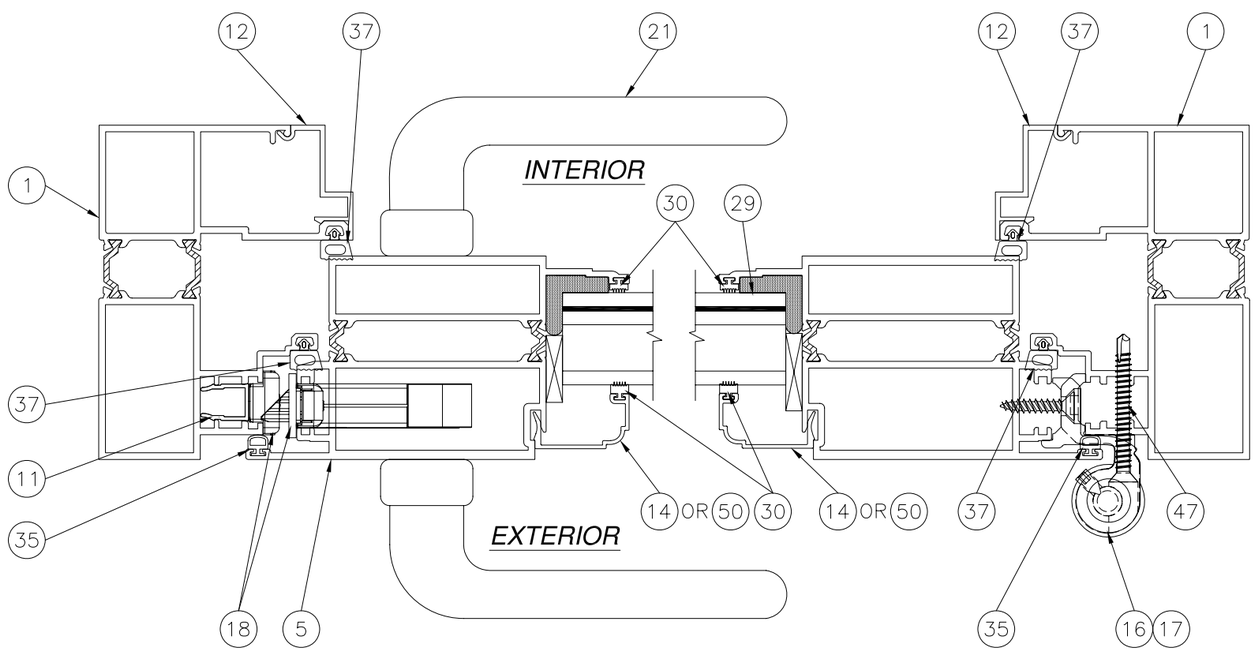

D/5 HORIZONTAL CROSS SECTION
OUTSWING UNIT

WinDoor INCORPORATED
7500 AMSTERDAM DRIVE
ORLANDO, FL 32832
Phone: 407.481.8400
Fax: 407.481.0505
www.windoorinc.com

SERIES 9050 THERMALLY BROKEN ALUMINUM INSWING/OUTSWING TERRACE DOOR – IMPACT HORIZONTAL CROSS SECTIONS

DRAWN:	DWG NO.	REV
TJH	08-01153	–
SCALE NTS	DATE 11/10/10	SHEET 5 OF 17

STATE OF TEXAS
LUIS R. LOMAS
101889
LICENSED
PROFESSIONAL ENGINEER

Luis R. Lomas P.E.
Texas No. 101889

REVISIONS			
REV	DESCRIPTION	DATE	APPROVED

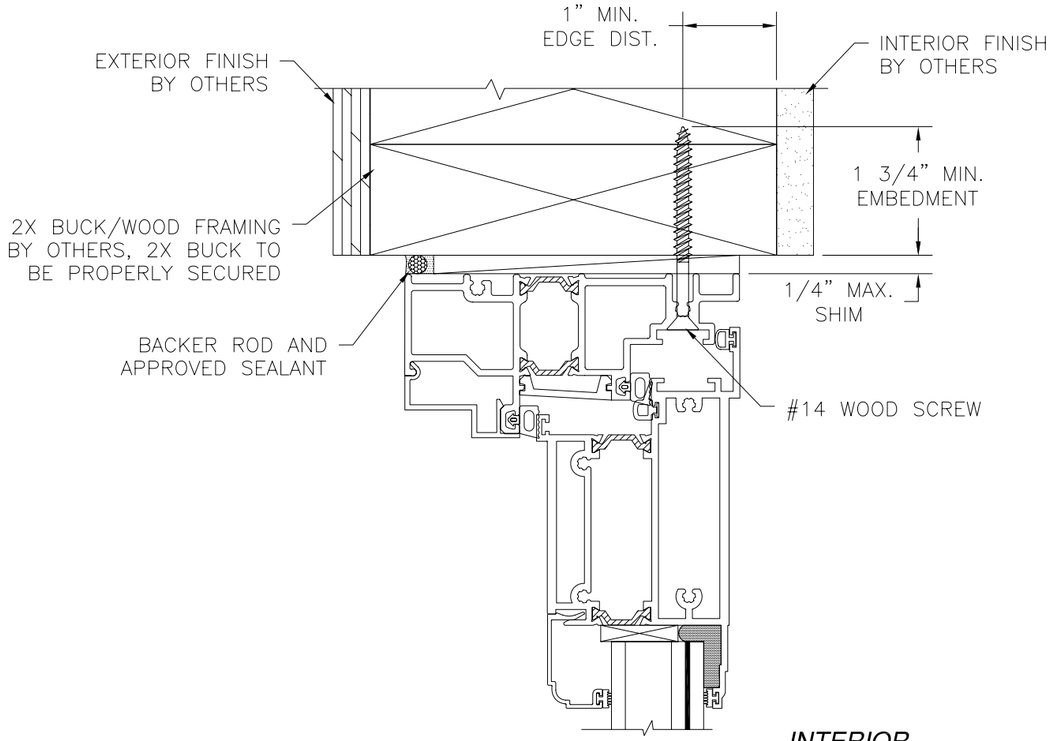

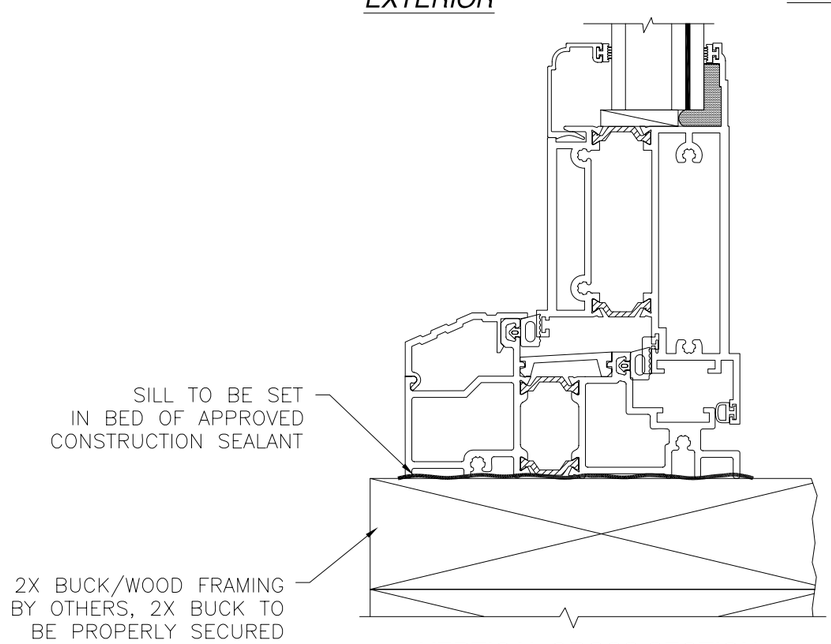

VERTICAL CROSS SECTION

2X BUCK/WOOD FRAMING INSTALLATION
INSWING UNIT WITH STANDARD SILL
STANDARD BOTTOM RAIL SHOWN, TALL
BOTTOM ALSO APPROVED

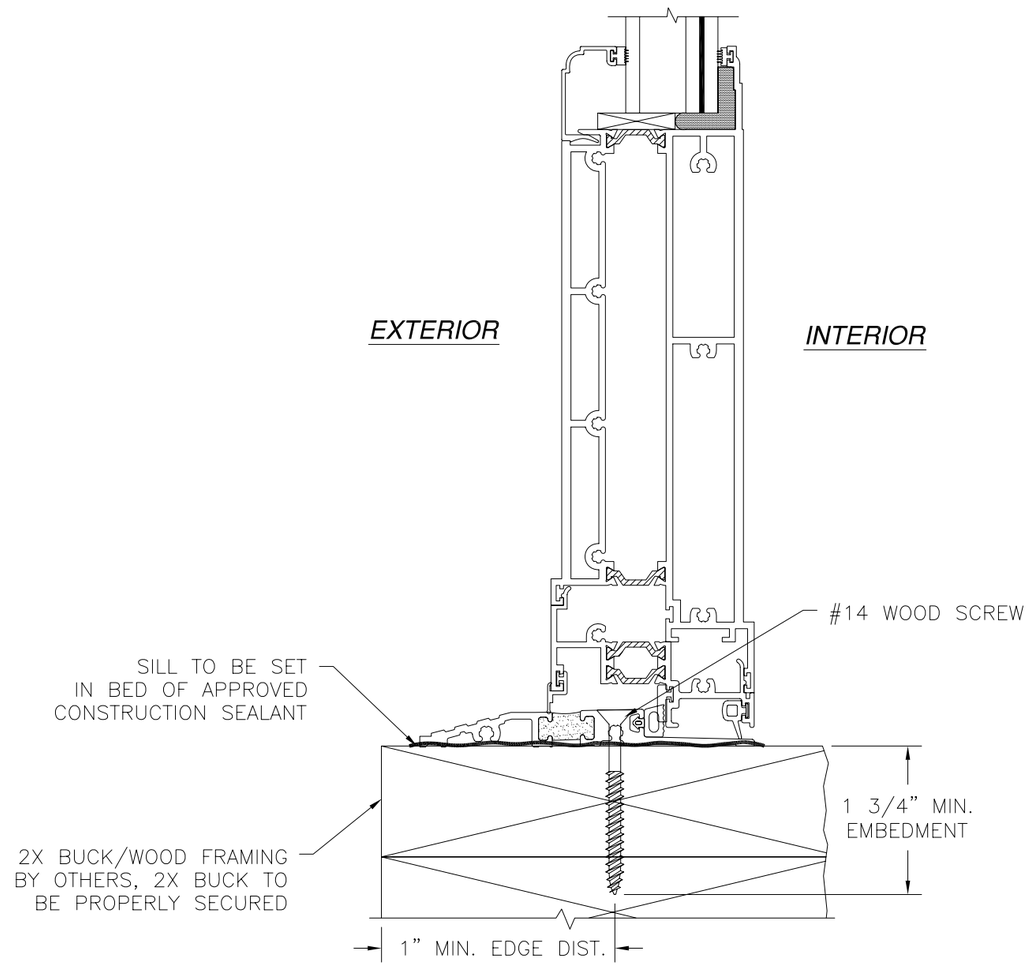

VERTICAL CROSS SECTION

2X BUCK/WOOD FRAMING INSTALLATION
INSWING UNIT WITH ADA SILL
AND TALL BOTTOM RAIL

WinDoor INCORPORATED
7500 AMSTERDAM DRIVE
ORLANDO, FL 32832
Phone: 407.481.8400
Fax: 407.481.0505
www.windoorinc.com

SERIES 9050 THERMALLY BROKEN ALUMINUM
INSWING/OUTSWING TERRACE DOOR – IMPACT
INSWING INSTALLATION DETAILS

DRAWN:	DWG NO.	REV
TJH	08–01153	–
SCALE NTS	DATE 11/10/10	SHEET 6 OF 17

STATE OF TEXAS
LUIS R. LOMAS
101889
LICENSED
PROFESSIONAL ENGINEER

Luis R. Lomas P.E.
Texas No. 101889

REVISIONS			
REV	DESCRIPTION	DATE	APPROVED

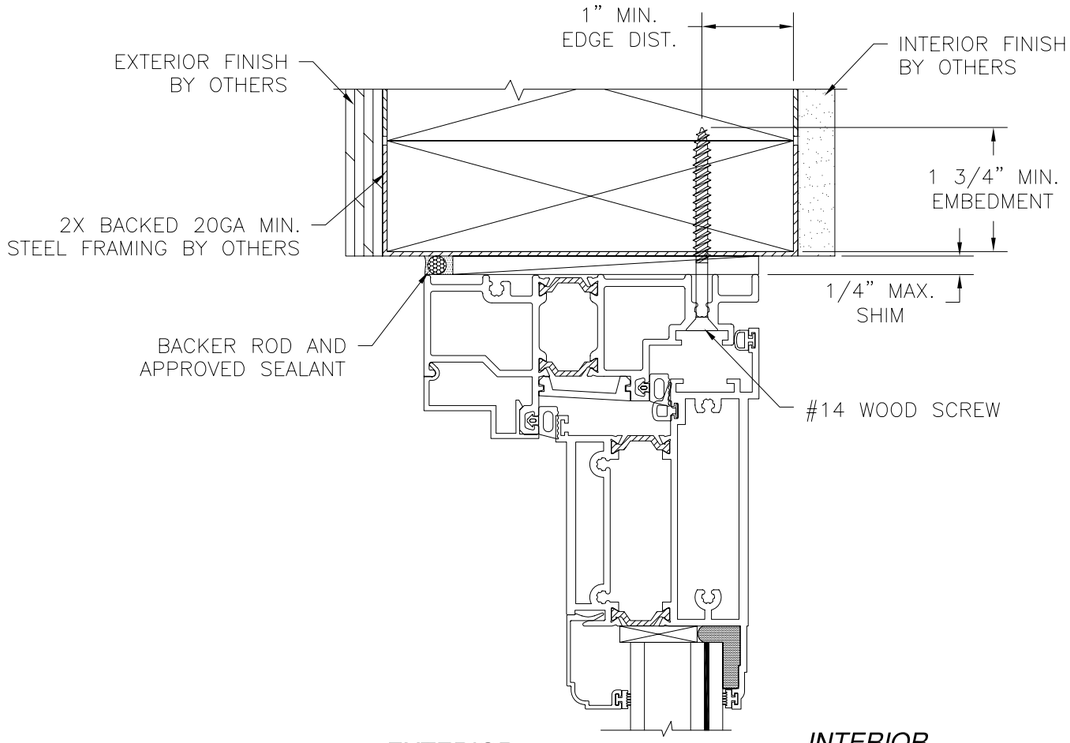

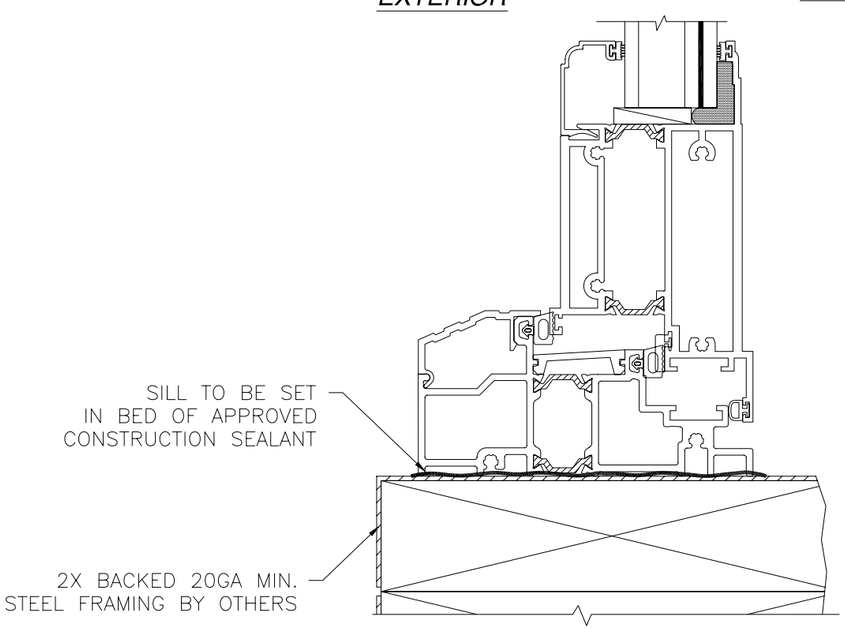

VERTICAL CROSS SECTION

2X BACKED STEEL FRAMING INSTALLATION
INSWING UNIT WITH STANDARD SILL
STANDARD BOTTOM RAIL SHOWN, TALL
BOTTOM ALSO APPROVED

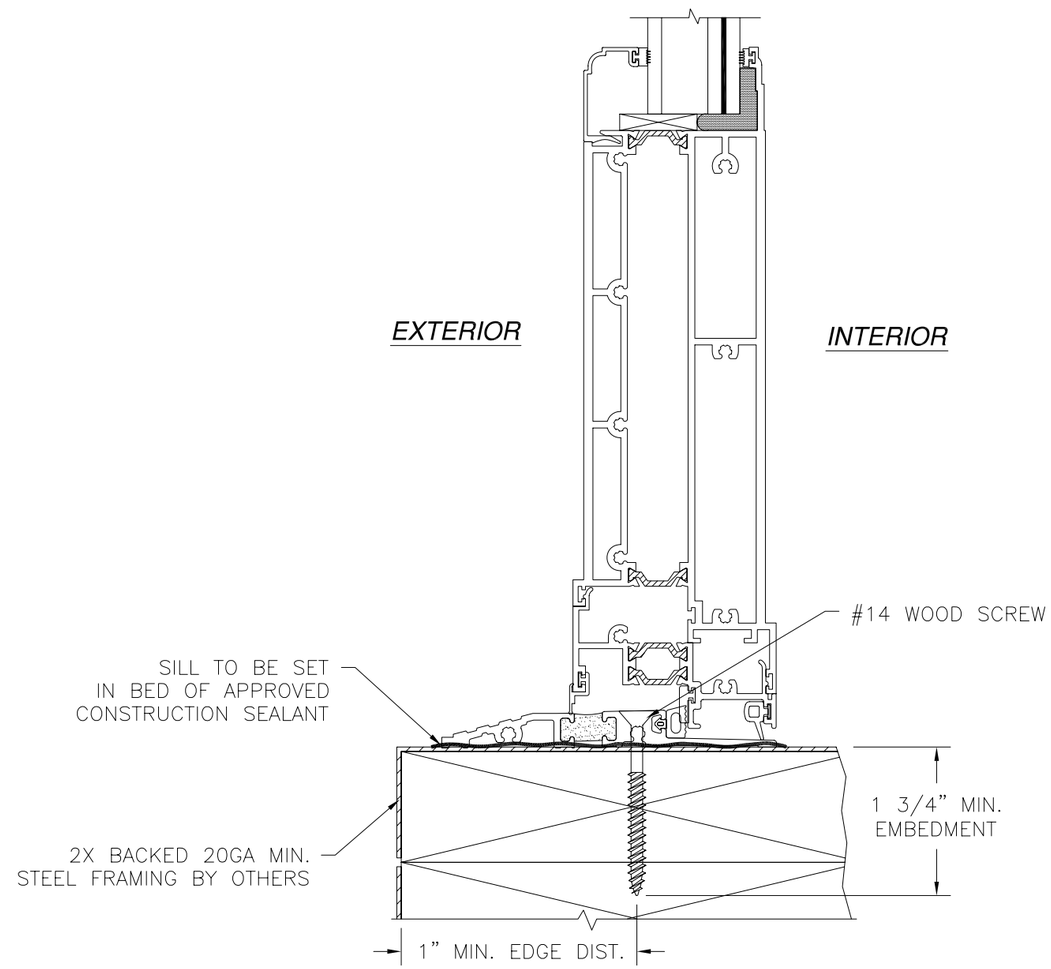

VERTICAL CROSS SECTION

2X BACKED STEEL FRAMING INSTALLATION
INSWING UNIT WITH ADA SILL
AND TALL BOTTOM RAIL

WinDoor INCORPORATED
7500 AMSTERDAM DRIVE
ORLANDO, FL 32832
Phone: 407.481.8400
Fax: 407.481.0505
www.windoorinc.com

SERIES 9050 THERMALLY BROKEN ALUMINUM
INSWING/OUTSWING TERRACE DOOR – IMPACT
INSTALLATION DETAILS

DRAWN:	DWG NO.	REV
TJH	08–01153	–

SCALE	DATE	SHEET
NTS	11/10/10	7 OF 17

STATE OF TEXAS
LUIS R. LOMAS
101889
LICENSED
PROFESSIONAL ENGINEER

Luis R. Lomas P.E.
Texas No. 101889

REVISIONS			
REV	DESCRIPTION	DATE	APPROVED

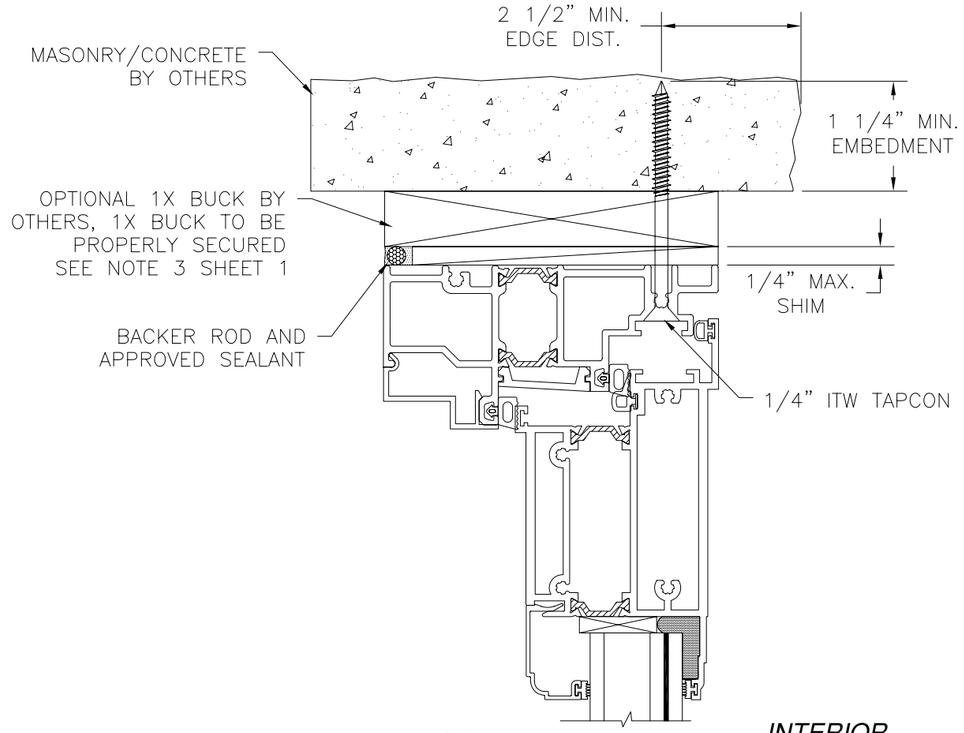

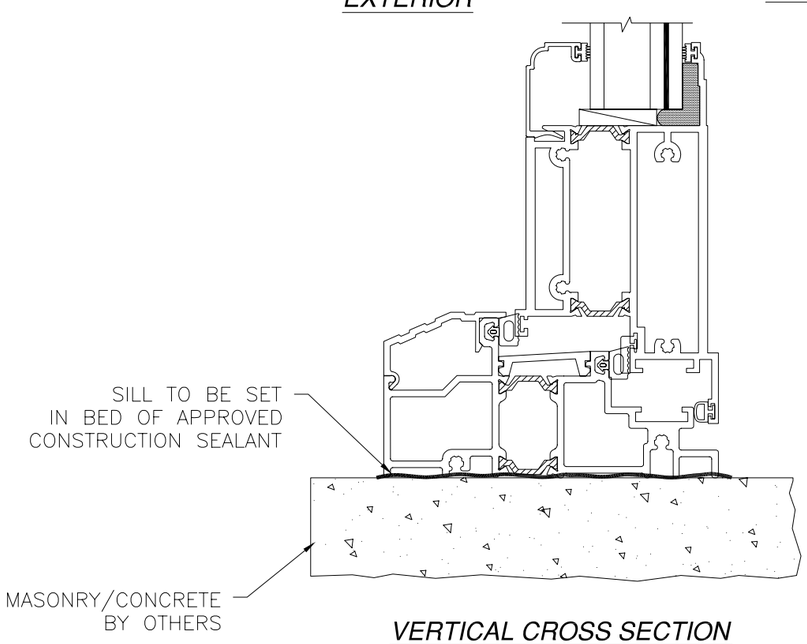

VERTICAL CROSS SECTION

MASONRY/CONCRETE INSTALLATION
INSWING UNIT WITH STANDARD SILL
STANDARD BOTTOM RAIL SHOWN, TALL
BOTTOM ALSO APPROVED

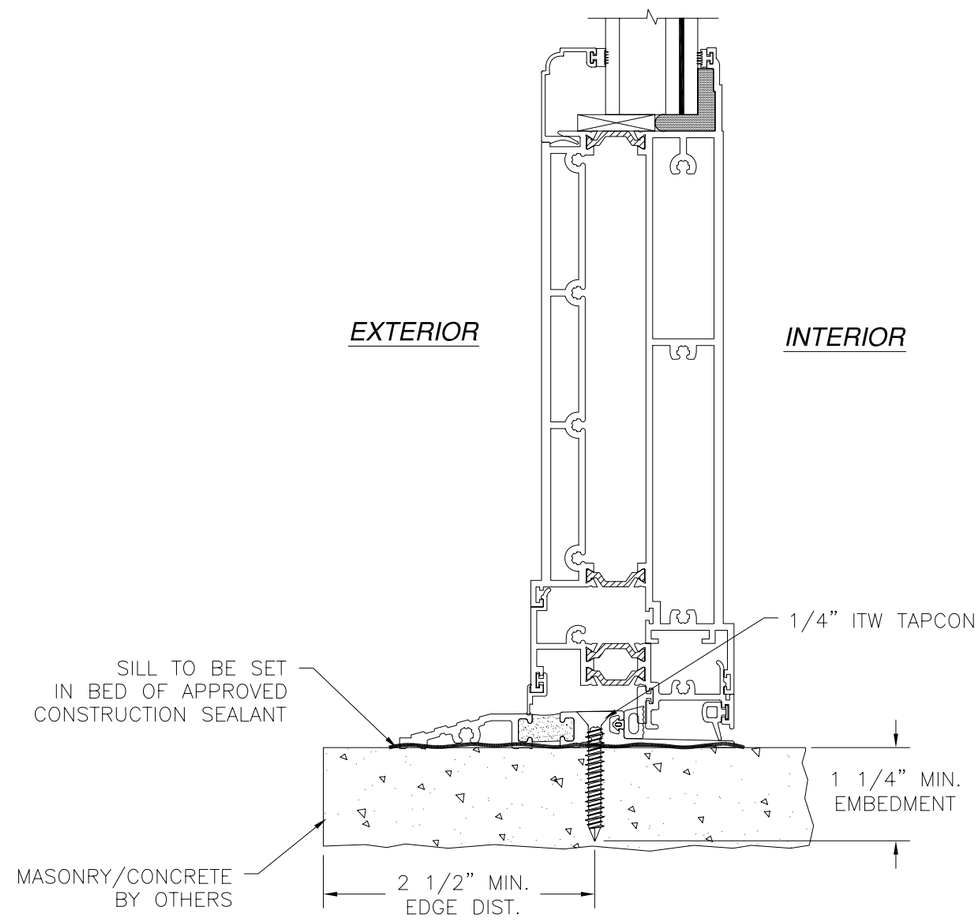

VERTICAL CROSS SECTION

MASONRY/CONCRETE INSTALLATION
INSWING UNIT WITH ADA SILL
AND TALL BOTTOM RAIL

WinDoor INCORPORATED
7500 AMSTERDAM DRIVE
ORLANDO, FL 32832
Phone: 407.481.8400
Fax: 407.481.0505
www.windoorinc.com

SERIES 9050 THERMALLY BROKEN ALUMINUM
INSWING/OUTSWING TERRACE DOOR – IMPACT
INSWING INSTALLATION DETAILS

DRAWN:	DWG NO.	REV
TJH	08-01153	–
SCALE NTS	DATE 11/10/10	SHEET 8 OF 17

Luis R. Lomas P.E.
Texas No. 101889

REVISIONS			
REV	DESCRIPTION	DATE	APPROVED

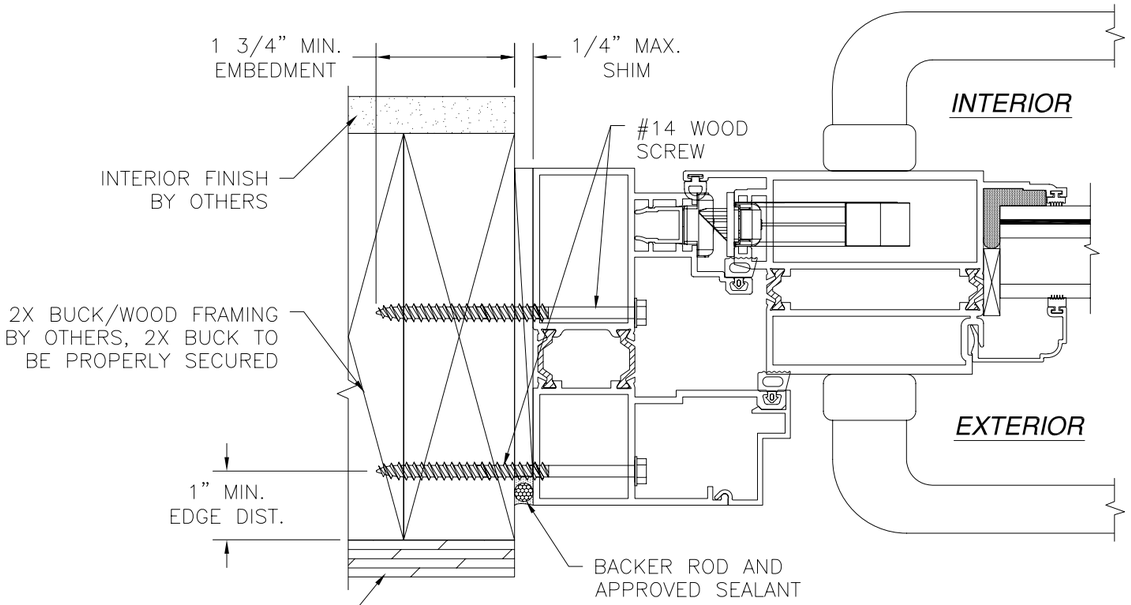

HORIZONTAL CROSS SECTION

2X BUCK/WOOD FRAMING INSTALLATION
INSWING UNIT, STRIKE JAMB SHOWN
HINGE JAMB SIMILAR

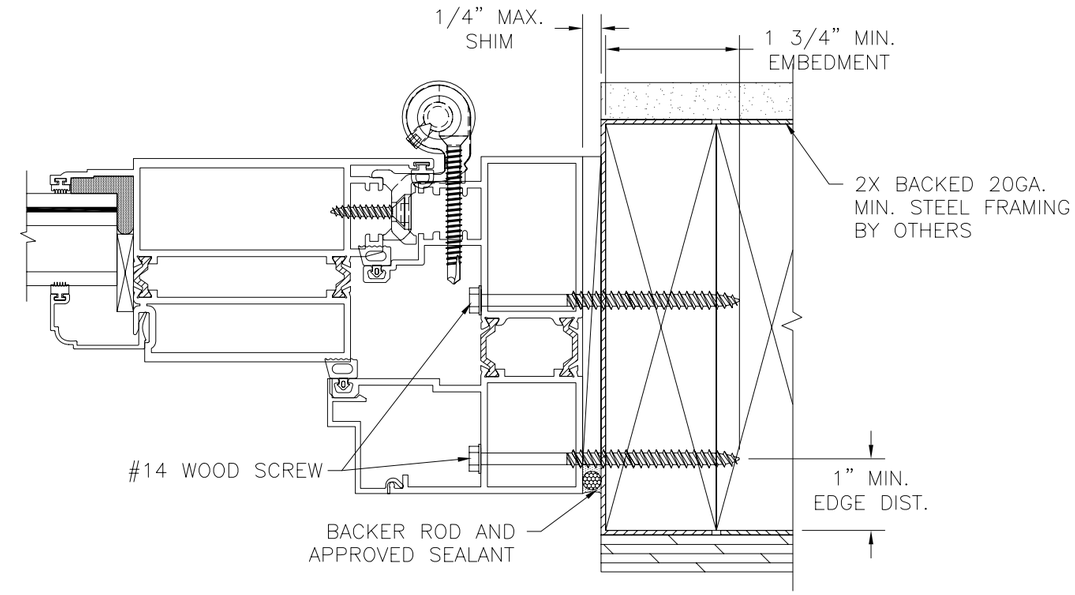

HORIZONTAL CROSS SECTION

2X BACKED STEEL FRAMING INSTALLATION
INSWING UNIT, HINGE JAMB SHOWN
STRIKE JAMB SIMILAR

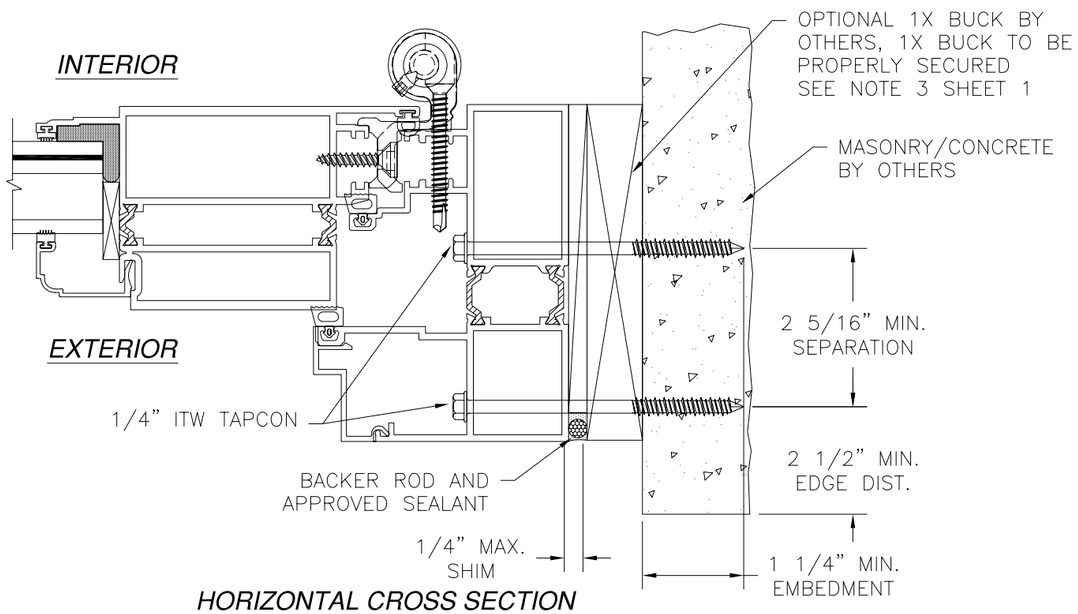

HORIZONTAL CROSS SECTION

MASONRY/CONCRETE INSTALLATION
INSWING UNIT, HINGE JAMB SHOWN
STRIKE JAMB SIMILAR

WinDoor INCORPORATED
7500 AMSTERDAM DRIVE
ORLANDO, FL 32832
Phone: 407.481.8400
Fax: 407.481.0505
www.windoorinc.com

SERIES 9050 THERMALLY BROKEN ALUMINUM
INSWING/OUTSWING TERRACE DOOR – IMPACT
INSWING INSTALLATION DETAILS

DRAWN:	DWG NO.	REV
TJH	08-01153	–
SCALE NTS / DATE 11/10/10	SHEET 9 OF 17	

STATE OF TEXAS
LUIS R. LOMAS
101889
LICENSED
PROFESSIONAL ENGINEER

Luis R. Lomas P.E.
Texas No. 101889

REVISIONS			
REV	DESCRIPTION	DATE	APPROVED

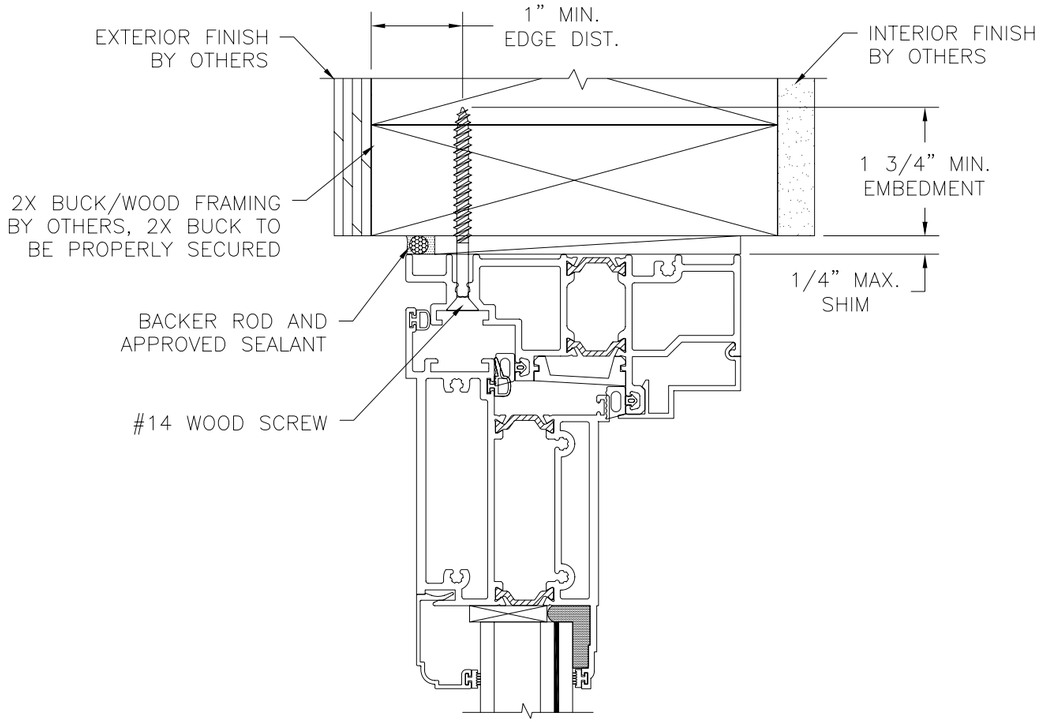

EXTERIOR INTERIOR

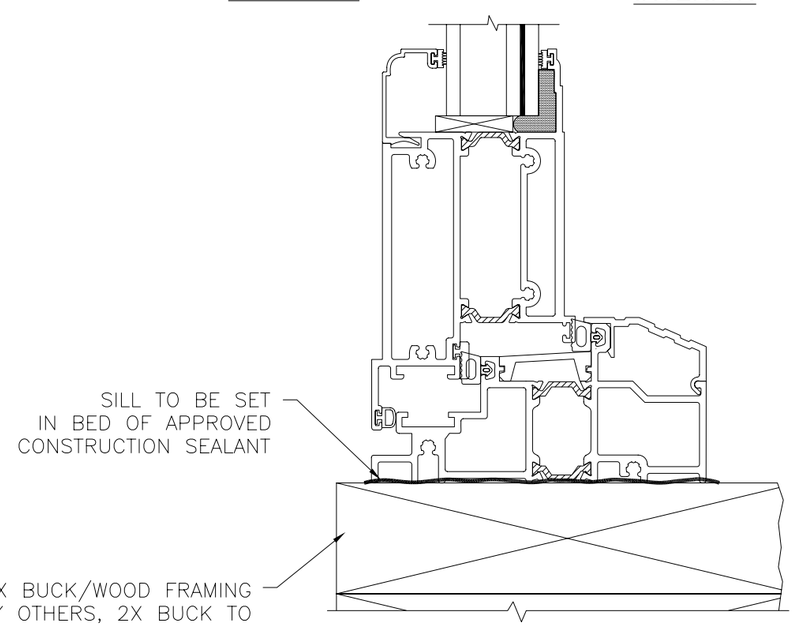

VERTICAL CROSS SECTION

2X BUCK/WOOD FRAMING INSTALLATION
OUTSWING UNIT WITH STANDARD SILL
STANDARD BOTTOM RAIL SHOWN, TALL
BOTTOM ALSO APPROVED

EXTERIOR INTERIOR

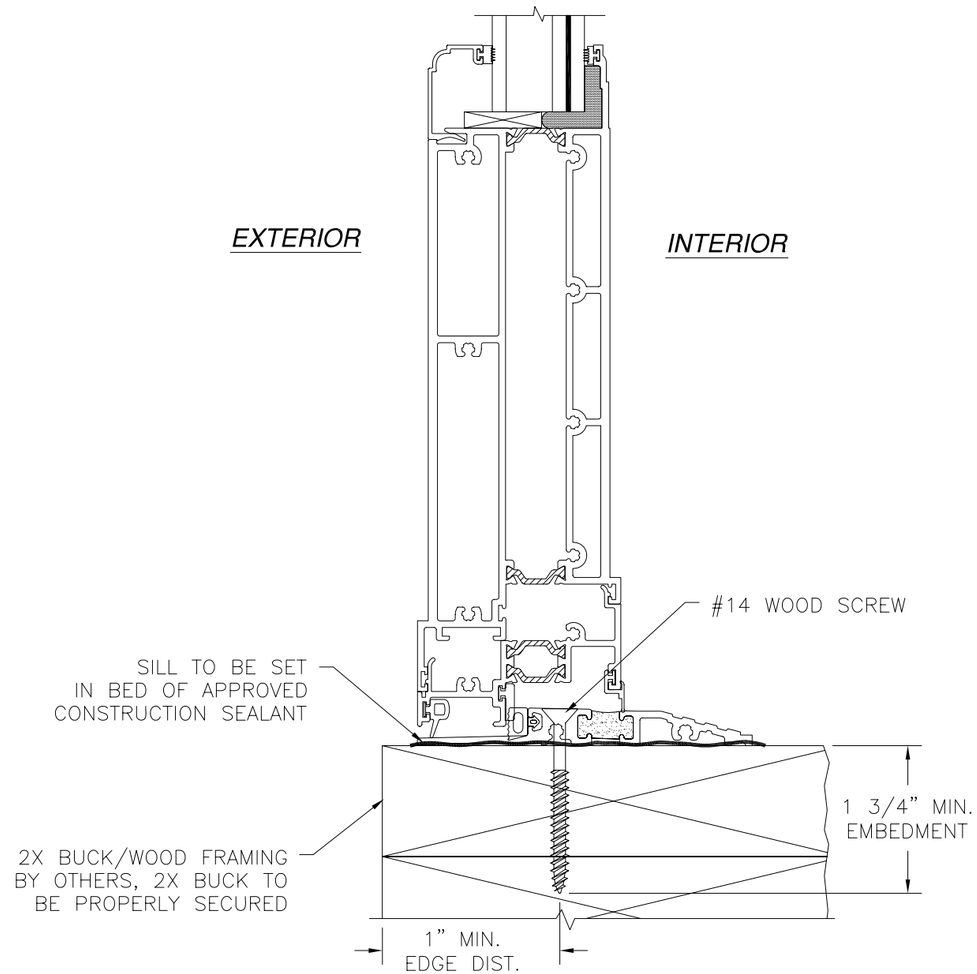

VERTICAL CROSS SECTION

2X BUCK/WOOD FRAMING INSTALLATION
OUTSWING UNIT WITH ADA SILL
AND TALL BOTTOM RAIL

WinDoor INCORPORATED
7500 AMSTERDAM DRIVE
ORLANDO, FL 32832
Phone: 407.481.8400
Fax: 407.481.0505
www.windoorinc.com

SERIES 9050 THERMALLY BROKEN ALUMINUM
INSWING/OUTSWING TERRACE DOOR – IMPACT
OUTSWING INSTALLATION DETAILS

DRAWN:	DWG NO.	REV
TJH	08–01153	–

SCALE	DATE	SHEET
NTS	11/10/10	10 OF 17

STATE OF TEXAS
LUIS R. LOMAS
101889
LICENSED
PROFESSIONAL ENGINEER

Luis R. Lomas P.E.
Texas No. 101889

REVISIONS			
REV	DESCRIPTION	DATE	APPROVED

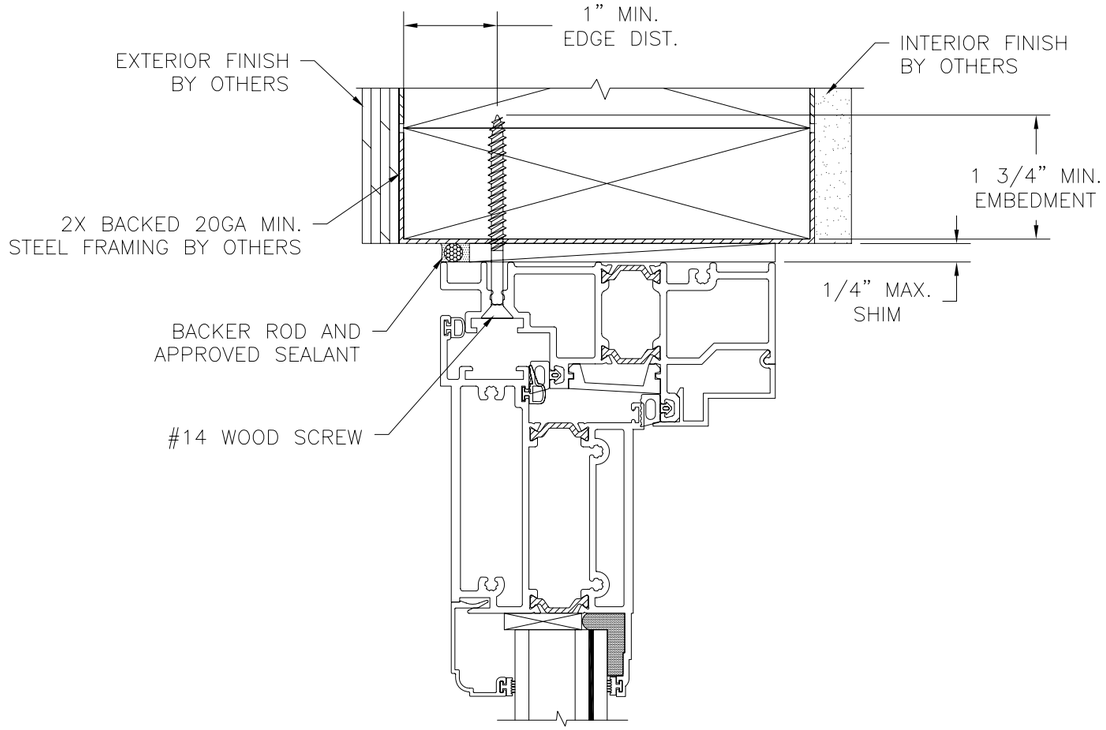

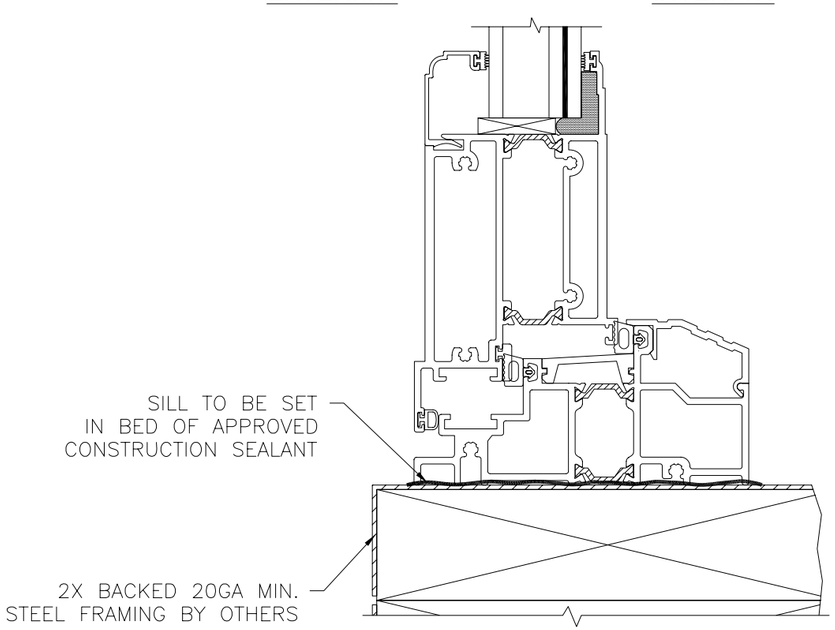

VERTICAL CROSS SECTION

2X BACKED STEEL FRAMING INSTALLATION
OUTSWING UNIT WITH STANDARD SILL
STANDARD BOTTOM RAIL SHOWN, TALL
BOTTOM ALSO APPROVED

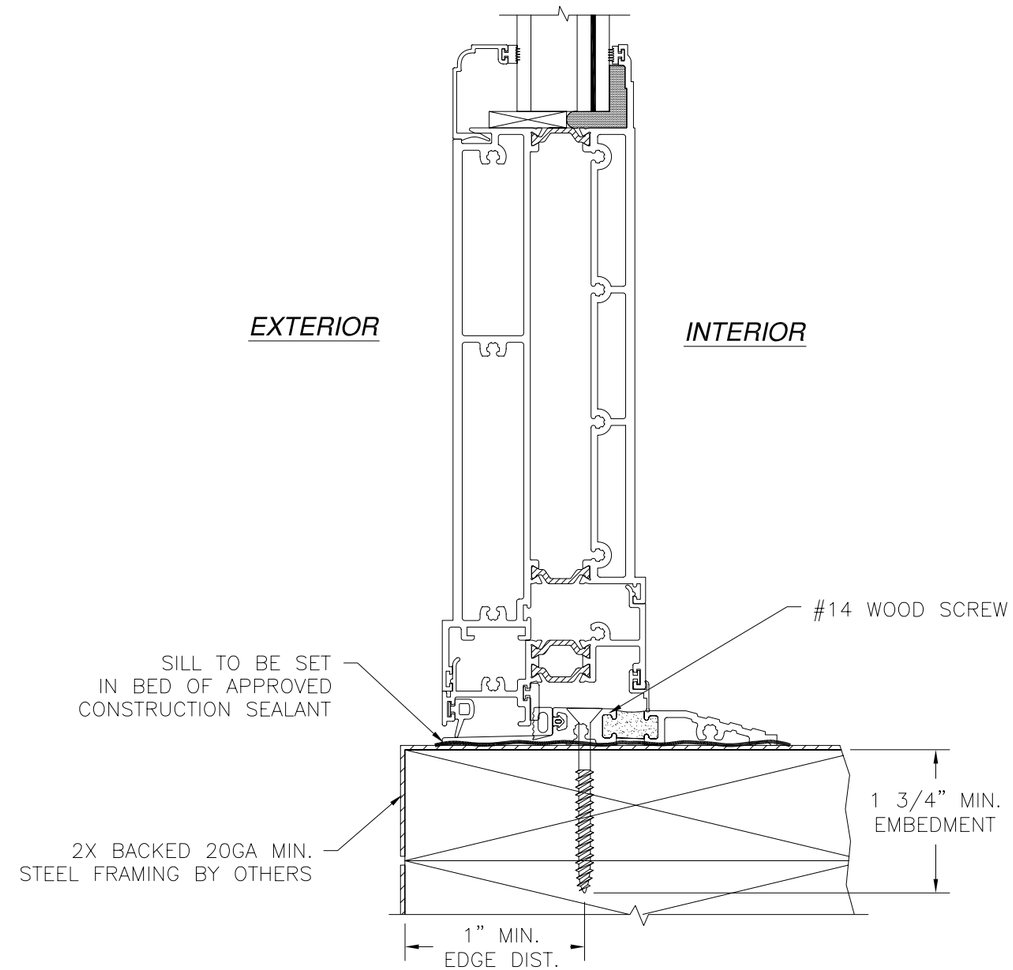

VERTICAL CROSS SECTION

2X BACKED STEEL FRAMING INSTALLATION
OUTSWING UNIT WITH ADA SILL
AND TALL BOTTOM RAIL

WinDoor INCORPORATED
7500 AMSTERDAM DRIVE
ORLANDO, FL 32832
Phone: 407.481.8400
Fax: 407.481.0505
www.windoorinc.com

SERIES 9050 THERMALLY BROKEN ALUMINUM
INSWING/OUTSWING TERRACE DOOR – IMPACT
OUTSWING INSTALLATION DETAILS

DRAWN:	DWG NO.	REV
TJH	08–01153	–

SCALE	DATE	SHEET
NTS	11/10/10	11 OF 17

STATE OF TEXAS
LUIS R. LOMAS
101889
LICENSED
PROFESSIONAL ENGINEER

Luis R. Lomas P.E.
Texas No. 101889

REVISIONS			
REV	DESCRIPTION	DATE	APPROVED

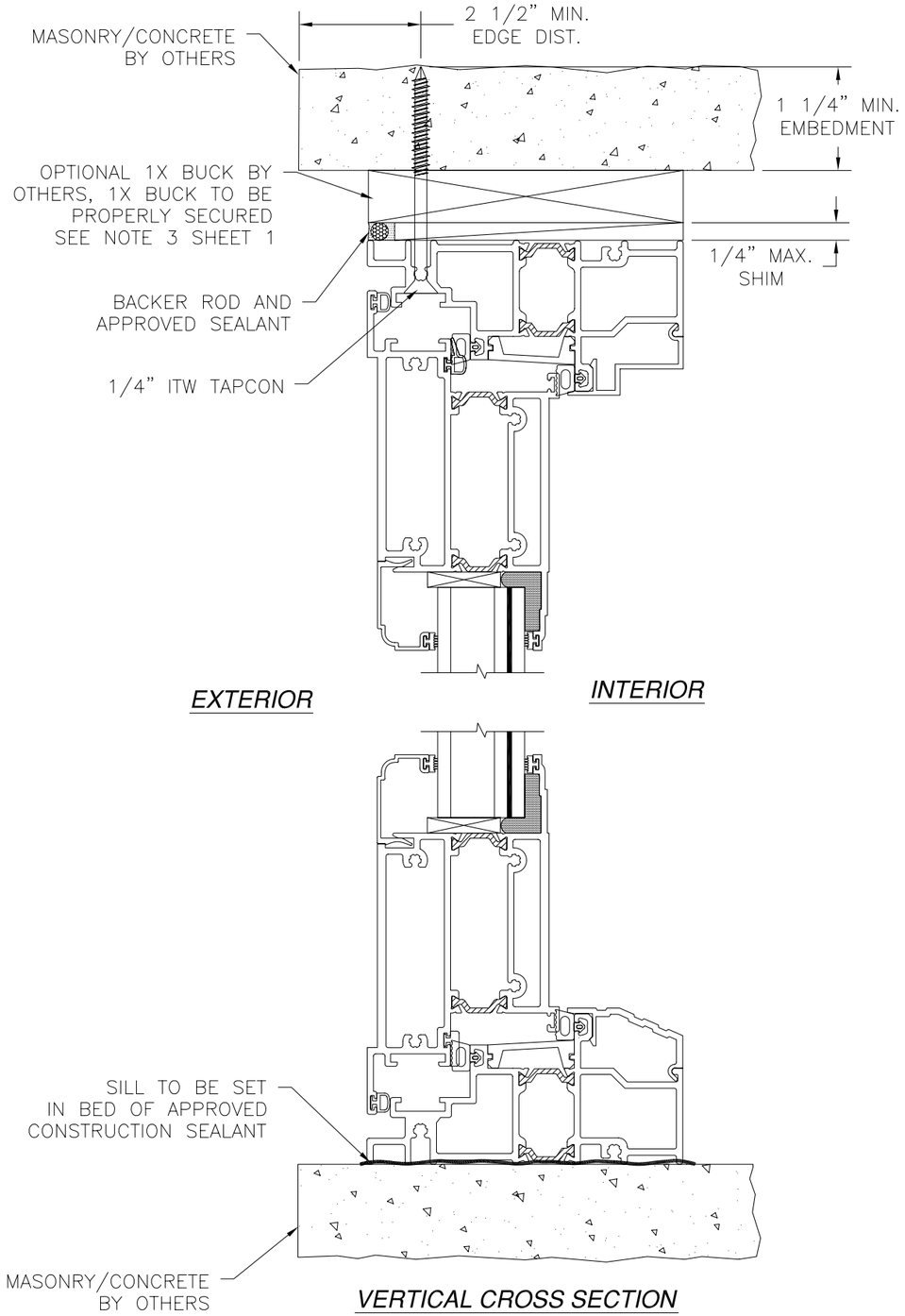

VERTICAL CROSS SECTION

MASONRY/CONCRETE INSTALLATION
OUTSWING UNIT WITH STANDARD SILL
STANDARD BOTTOM RAIL SHOWN, TALL BOTTOM ALSO APPROVED

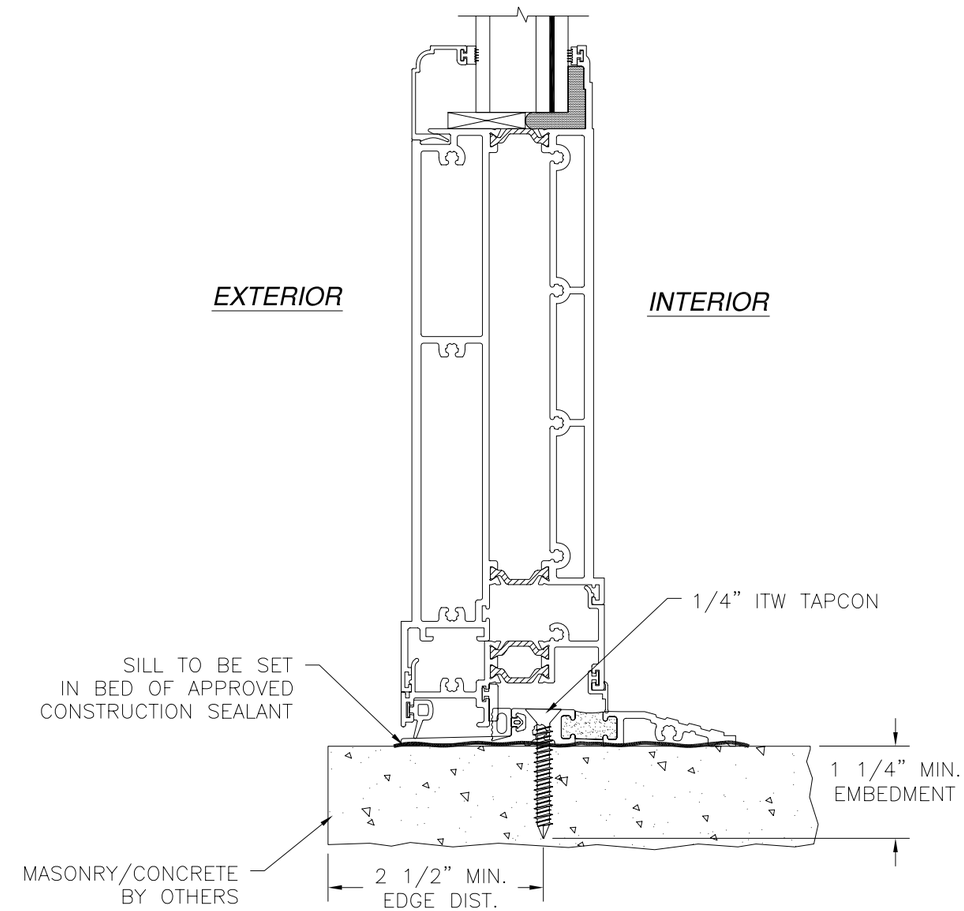

VERTICAL CROSS SECTION

MASONRY/CONCRETE INSTALLATION
OUTSWING UNIT WITH ADA SILL
AND TALL BOTTOM RAIL

WinDoor INCORPORATED
7500 AMSTERDAM DRIVE
ORLANDO, FL 32832
Phone: 407.481.8400
Fax: 407.481.0505
www.windoorinc.com

SERIES 9050 THERMALLY BROKEN ALUMINUM INSWING/OUTSWING TERRACE DOOR – IMPACT OUTSWING INSTALLATION DETAILS

DRAWN:	DWG NO.	REV
TJH	08-01153	–
SCALE NTS	DATE 11/10/10	SHEET 12 OF 17

STATE OF TEXAS
LUIS R. LOMAS
101889
LICENSED
PROFESSIONAL ENGINEER

Luis R. Lomas P.E.
Texas No. 101889

REVISIONS			
REV	DESCRIPTION	DATE	APPROVED

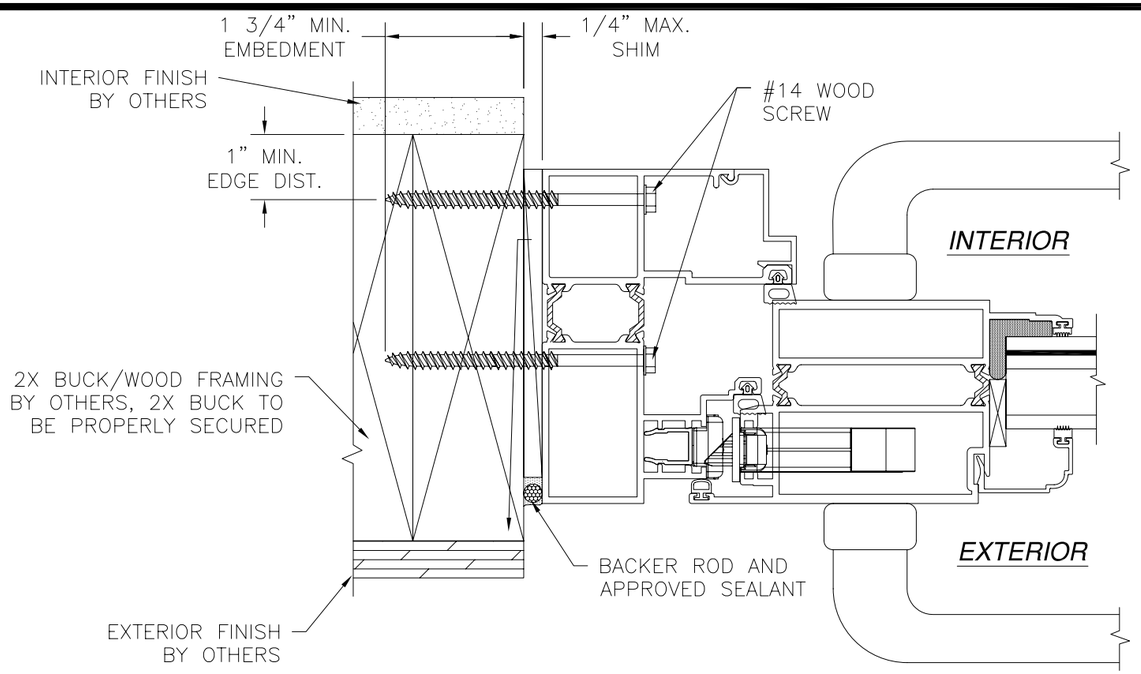

HORIZONTAL CROSS SECTION

2X BUCK/WOOD FRAMING INSTALLATION
OUTSWING UNIT, STRIKE JAMB SHOWN
HINGE JAMB SIMILAR

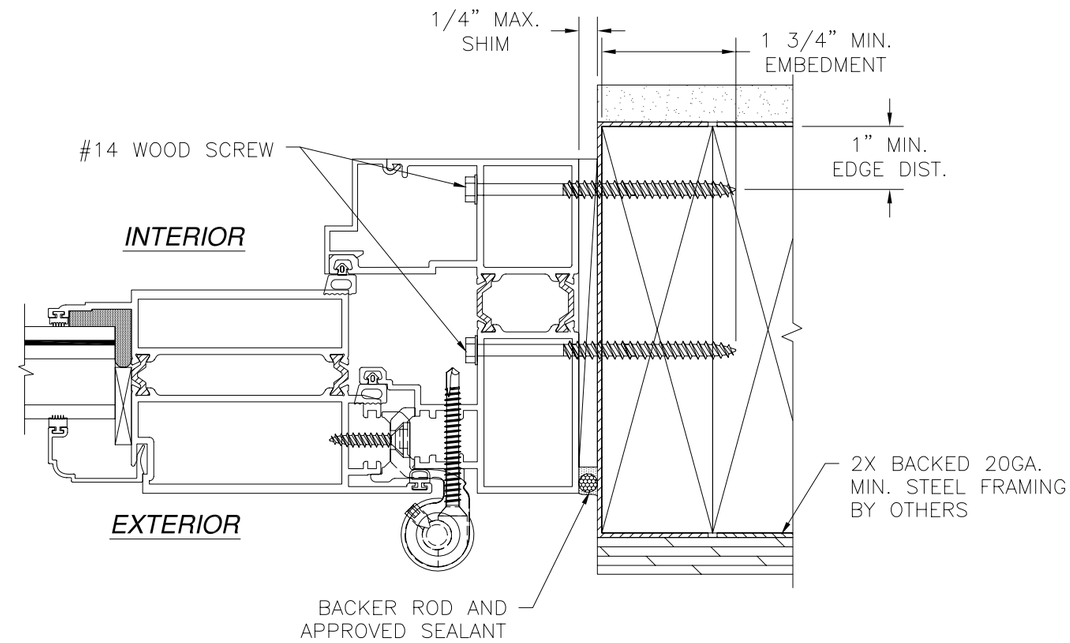

HORIZONTAL CROSS SECTION

2X BACKED STEEL FRAMING INSTALLATION
OUTSWING UNIT, HINGE JAMB SHOWN
STRIKE JAMB SIMILAR

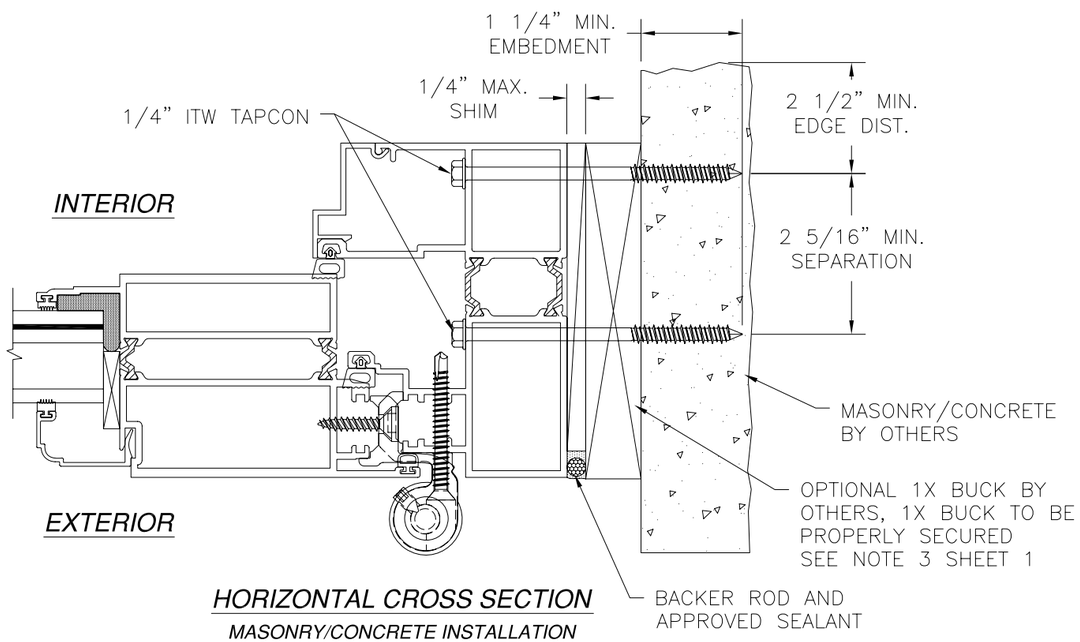

HORIZONTAL CROSS SECTION

MASONRY/CONCRETE INSTALLATION
OUTSWING UNIT, HINGE JAMB SHOWN
STRIKE JAMB SIMILAR

WinDoor INCORPORATED
7500 AMSTERDAM DRIVE
ORLANDO, FL 32832
Phone: 407.481.8400
Fax: 407.481.0505
www.windoorinc.com

SERIES 9050 THERMALLY BROKEN ALUMINUM
INSWING/OUTSWING TERRACE DOOR – IMPACT
OUTSWING INSTALLATION DETAILS

DRAWN:	DWG NO.	REV
TJH	08–01153	–
SCALE NTS / DATE 11/10/10	SHEET 13 OF 17	

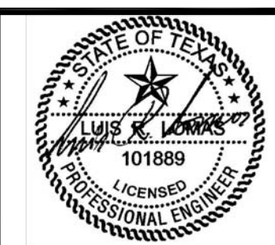

Luis R. Lomas P.E.
Texas No. 101889

REVISIONS			
REV	DESCRIPTION	DATE	APPROVED

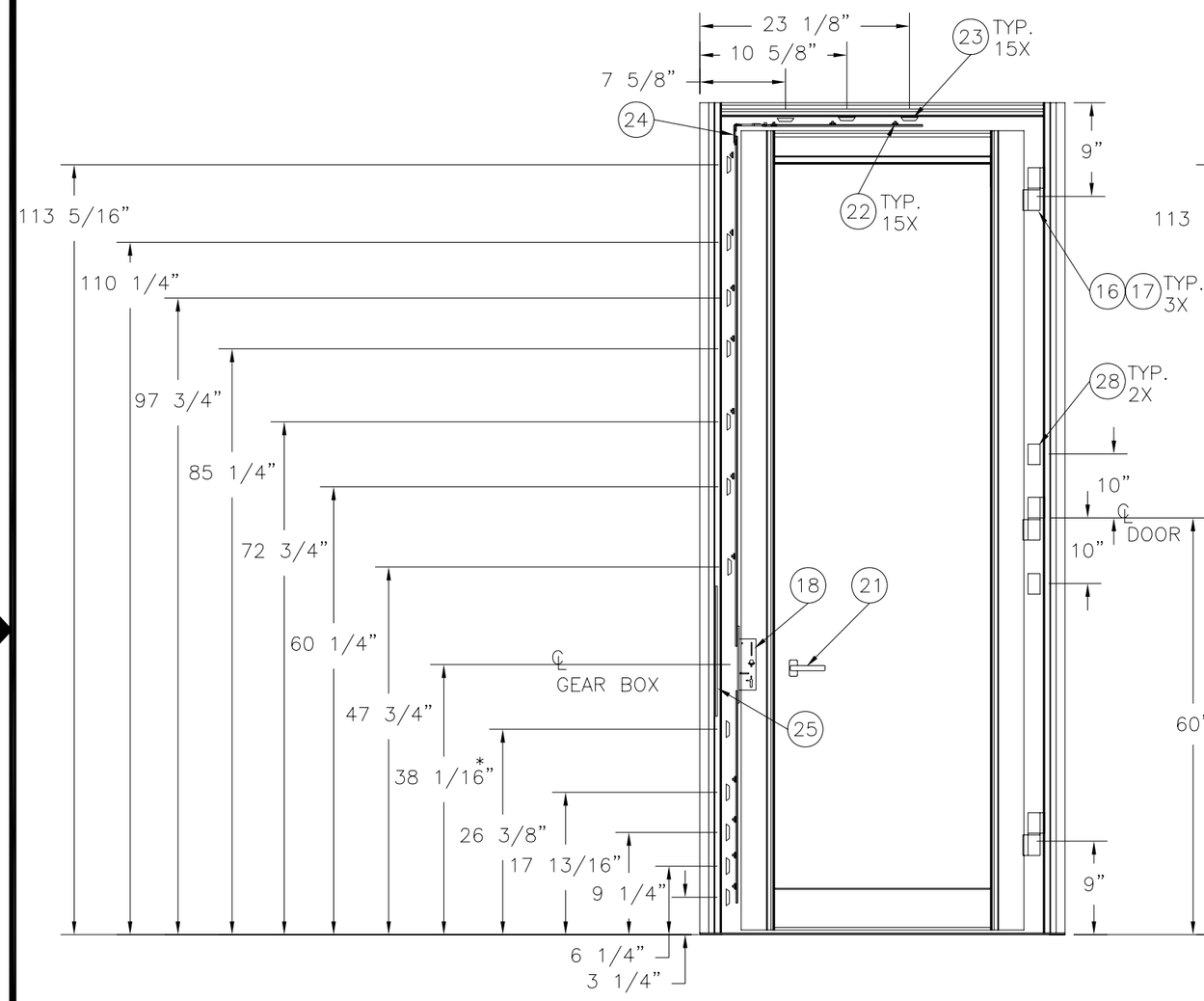

SERIES 9050 THERMALLY BROKEN ALUMINUM INSWING/OUTSWING TERRACE DOOR WITH ADA SILL

EXTERIOR VIEW

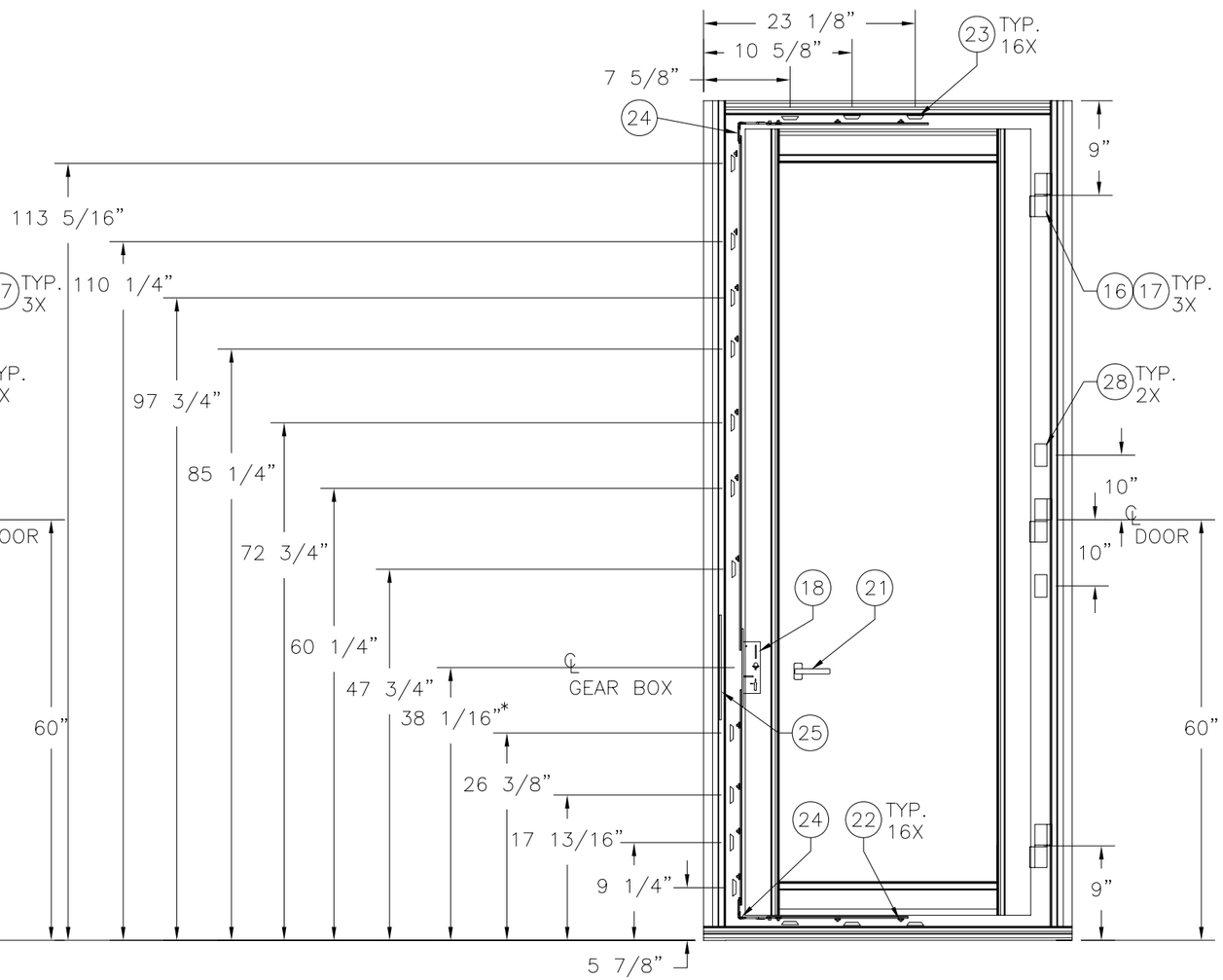

SERIES 9050 THERMALLY BROKEN ALUMINUM INSWING/OUTSWING TERRACE DOOR WITH STANDARD SILL

EXTERIOR VIEW

NOTE:
DIMENSIONS MARKED WITH * ARE CENTER OF LEVER ACTIVATED GEAR BOX. ALL OTHER DIMENSIONS ARE CENTER OF KEEPERS.

WinDoor INCORPORATED
7500 AMSTERDAM DRIVE
ORLANDO, FL 32832
Phone: 407.481.8400
Fax: 407.481.0505
www.windoorinc.com

SERIES 9050 THERMALLY BROKEN ALUMINUM INSWING/OUTSWING TERRACE DOOR – IMPACT HARDWARE LAYOUTS

DRAWN:	DWG NO.	REV
TJH	08–01153	–
SCALE NTS	DATE 11/10/10	SHEET 14 OF 17

Luis R. Lomas P.E.
Texas No. 101889

REVISIONS			
REV	DESCRIPTION	DATE	APPROVED

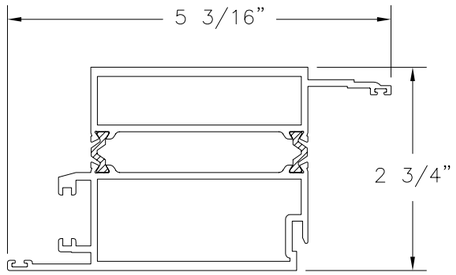

4 STILE ASSEMBLY OUTSWING

EXTRUDED ALUMINUM 6063-T6 .090" THICK

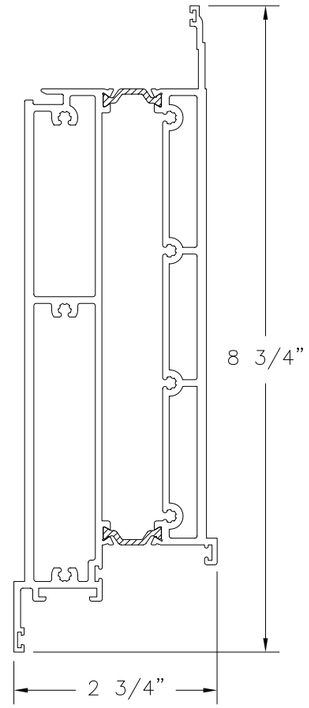

8 TALL BOTTOM RAIL ASSEMBLY OUTSWING

EXTRUDED ALUMINUM 6063-T6 .090" THICK

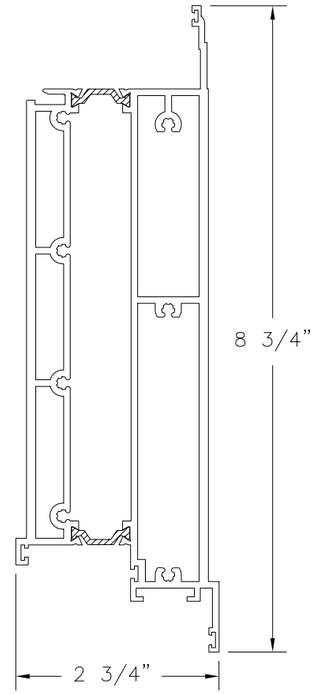

9 TALL BOTTOM RAIL ASSEMBLY INSWING

EXTRUDED ALUMINUM 6063-T6 .090" THICK

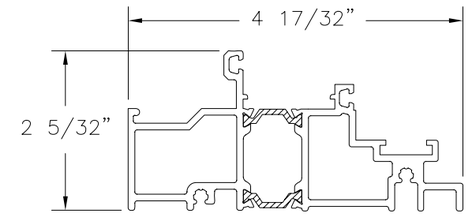

2 FRAME HEAD & STANDARD SILL ASSEMBLY

EXTRUDED ALUMINUM 6063-T6 .090" THICK

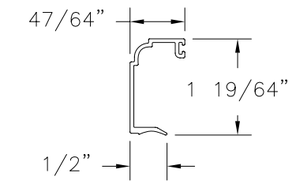

14 GLASS STOP 1.25"

EXTRUDED ALUMINUM 6063-T6 .050" THICK

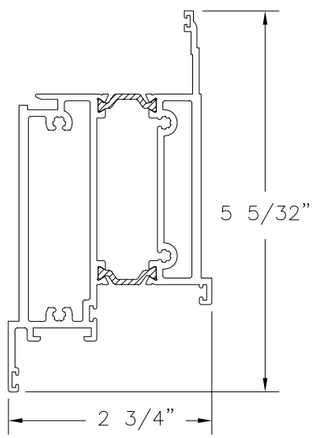

6 TOP & BOTTOM RAIL ASSEMBLY OUTSWING

EXTRUDED ALUMINUM 6063-T6 .090" THICK

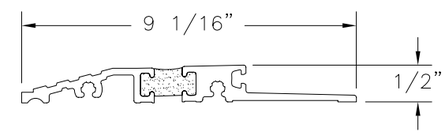

3 ADA SILL ASSEMBLY

EXTRUDED ALUMINUM 6063-T6 .090" THICK
WITH POUR AND DEBRIDGE THERMAL BREAK

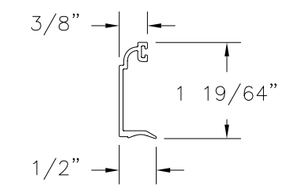

50 GLASS STOP 1.625"

EXTRUDED ALUMINUM 6063-T6 .050" THICK

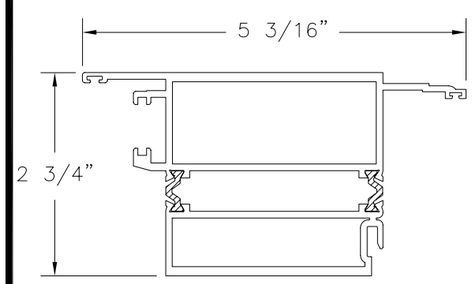

5 STILE ASSEMBLY INSWING

EXTRUDED ALUMINUM 6063-T6 .090" THICK

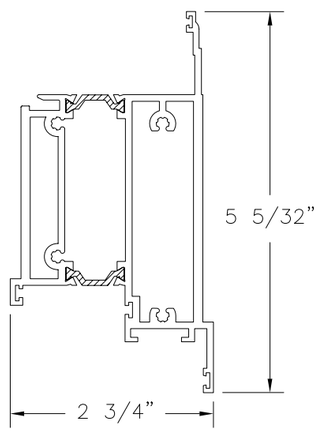

7 TOP & BOTTOM RAIL ASSEMBLY INSWING

EXTRUDED ALUMINUM 6063-T6 .090" THICK

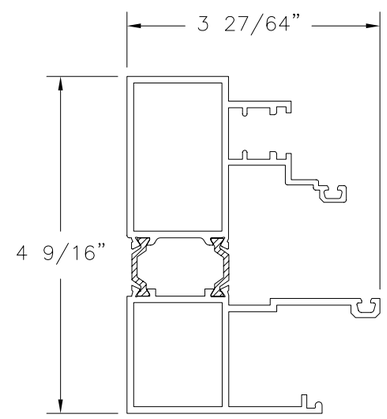

1 FRAME JAMB ASSEMBLY OUT/INSWING

EXTRUDED ALUMINUM 6063-T6 .090" THICK

WinDoor INCORPORATED

7500 AMSTERDAM DRIVE
ORLANDO, FL 32832
Phone: 407.481.8400
Fax: 407.481.0505
www.windoorinc.com

SERIES 9050 THERMALLY BROKEN ALUMINUM INSWING/OUTSWING TERRACE DOOR – IMPACT COMPONENTS

DRAWN: TJH	DWG NO. 08–01153	REV –
SCALE NTS	DATE 11/10/10	SHEET 15 OF 17

STATE OF TEXAS
LUIS R. LOMAS
101889
LICENSED
PROFESSIONAL ENGINEER

Luis R. Lomas P.E.
Texas No. 101889

REVISIONS			
REV	DESCRIPTION	DATE	APPROVED

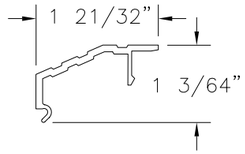

(13) STANDARD SILL COVER PLATE
EXTRUDED ALUMINUM 6063-T6 .090" THICK

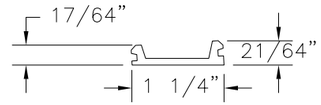

(38) STRUT COVER IS
EXTRUDED ALUMINUM 6063-T6 .090" THICK

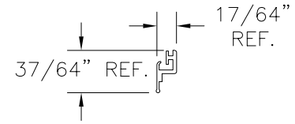

(40) FLEX COEX BOTTOM SWEEP
RIGID PVC .050" THICK

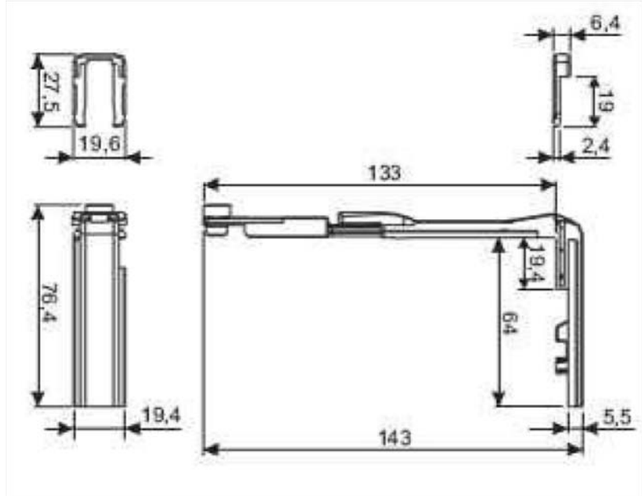

(24) CORNER DRIVE

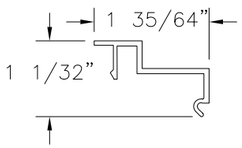

(12) JAMB & HEAD COVER PLATE
EXTRUDED ALUMINUM 6063-T6 .070" THICK

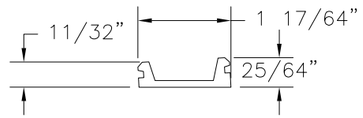

(39) STRUT COVER 0S
EXTRUDED ALUMINUM 6063-T6 .090" THICK

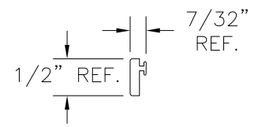

(41) FILLER STRIP
PVC 92 DUROMETER

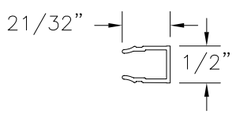

(11) EURO FRAME GROOVE COVER
EXTRUDED ALUMINUM 6063-T6 .050" THICK

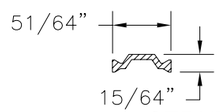

(49) 20mm STRUT
POLYMIDE 66

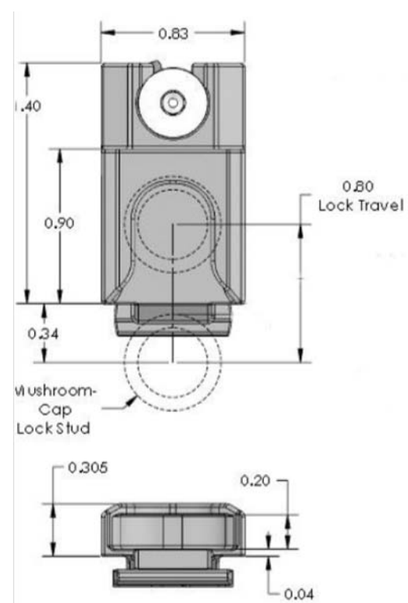

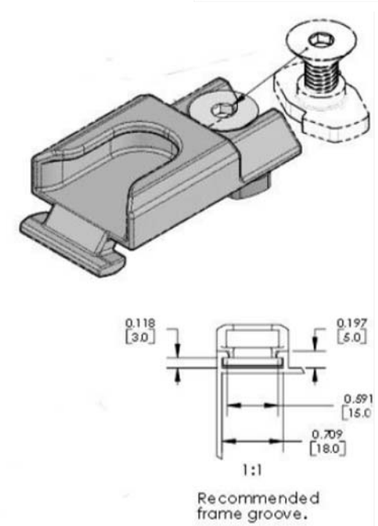

(23) EUROGROOVE KEEPERS

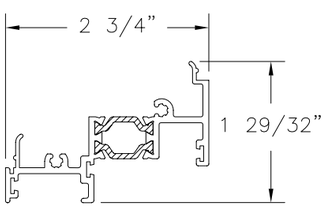

(10) ADA BOTTOM RAIL ADAPTOR ASSEMBLY
EXTRUDED ALUMINUM 6063-T6 .080" THICK

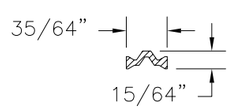

(48) 14mm STRUT
POLYMIDE 66

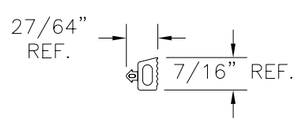

(37) SPONGE SEAL
EDPM

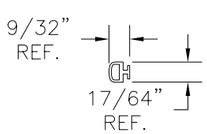

(35) STILE & RAIL FLANGE WEATHERSTRIP

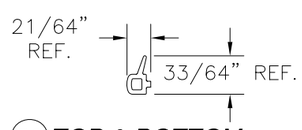

(36) TOP & BOTTOM RAIL WEATHERSTRIP

WinDoor INCORPORATED
7500 AMSTERDAM DRIVE
ORLANDO, FL 32832
Phone: 407.481.8400
Fax: 407.481.0505
www.windoorinc.com

SERIES 9050 THERMALLY BROKEN ALUMINUM INSWING/OUTSWING TERRACE DOOR – IMPACT COMPONENTS

DRAWN:	DWG NO.	REV
TJH	08–01153	–
SCALE NTS	DATE 11/10/10	SHEET 16 OF 17

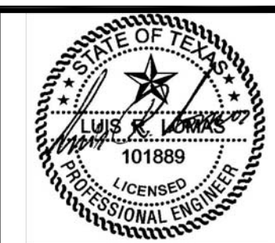

Luis R. Lomas P.E.
Texas No. 101889

REVISIONS			
REV	DESCRIPTION	DATE	APPROVED

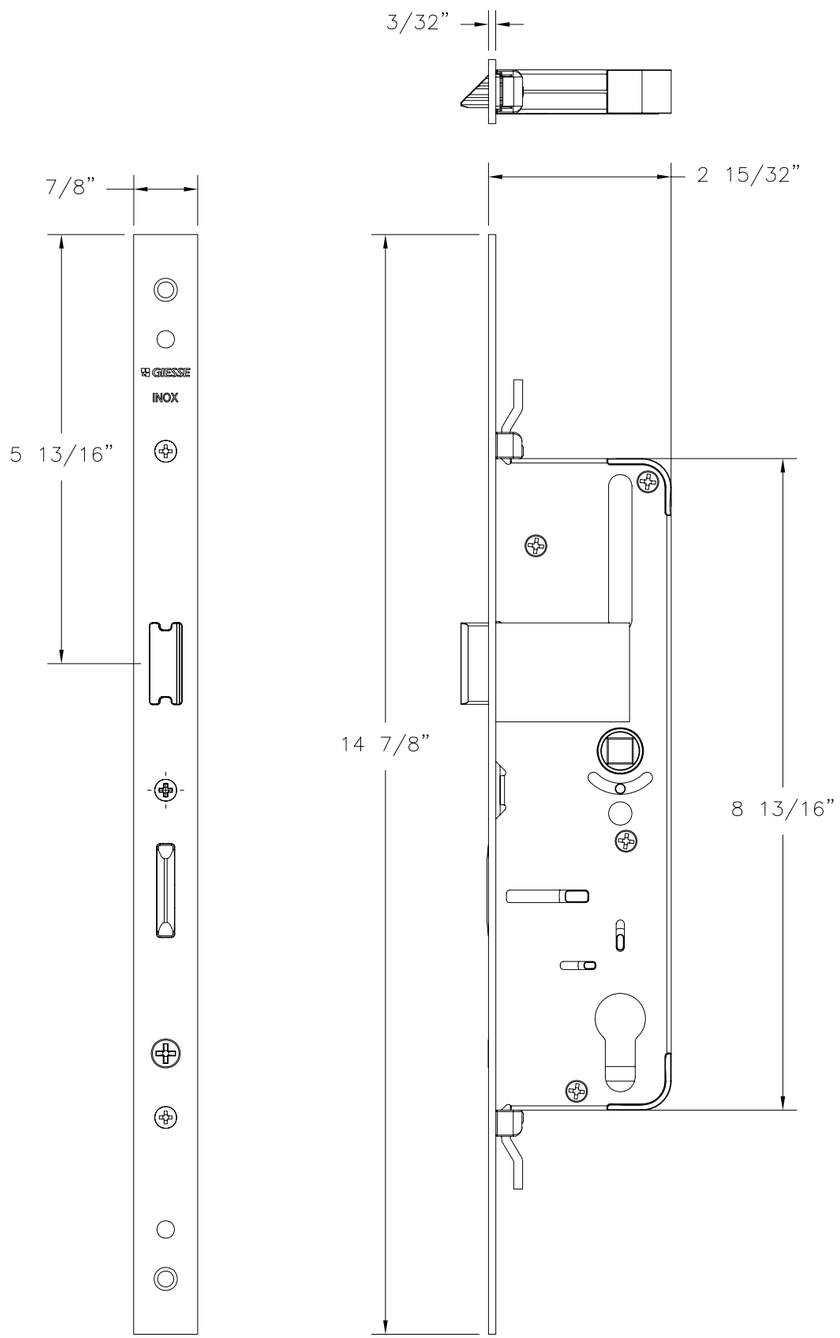

18 LEVEL ACTIVATED GEAR BOX

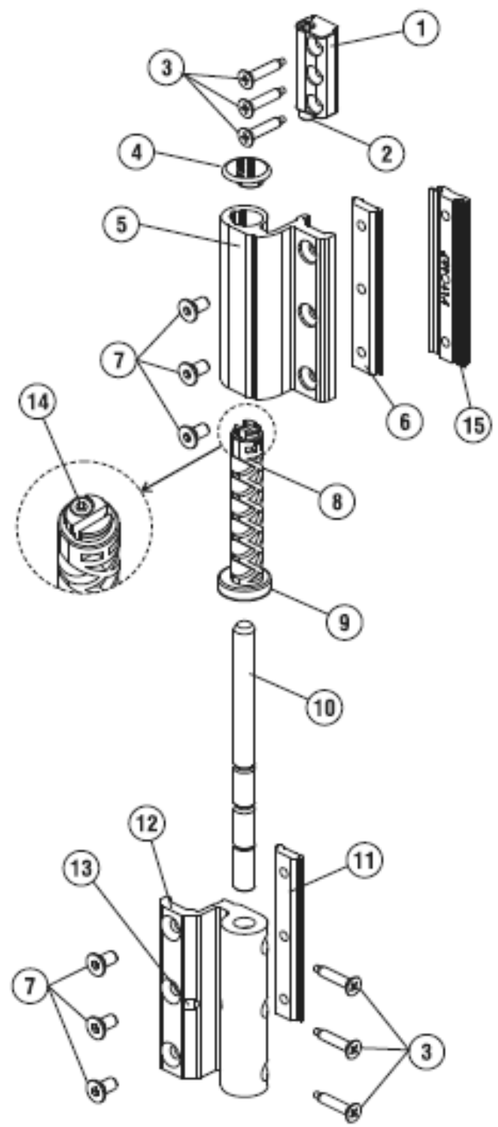

16 FLASH XXL DOOR HINGE

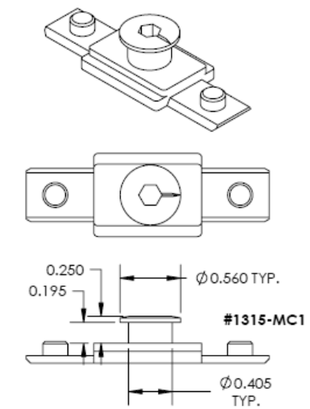

22 LOCKING PLATES

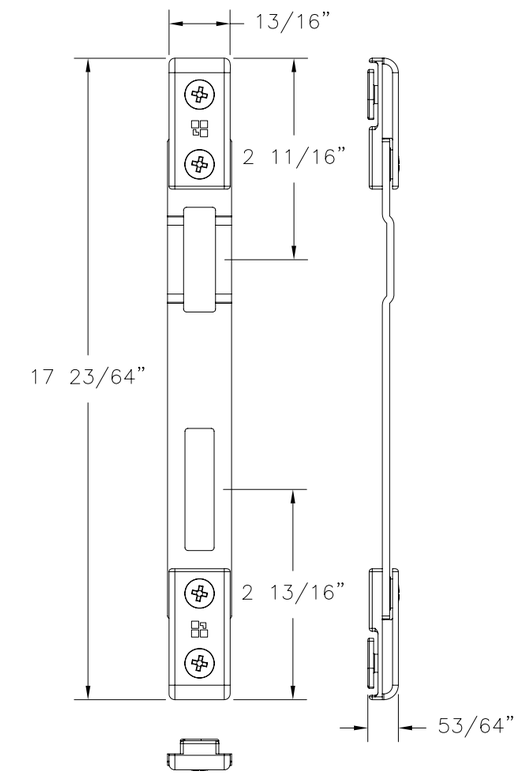

18 STRIKE PLATE

FLUSH XXL DOOR HINGE B.O.M.

1. HEIGHT ADJUSTMENT PLATE
2. GRUB SCREW FOR WING RAISING
3. #10 x 2" TEK SCREW
4. CAP
5. FM HINGE PART
6. FIXING PLATE FOR FM HINGE
7. FIXING SCREWS M6 x 12
8. ECCENTRIC BUSHING
9. BEARING
10. PIN
11. PLATE FOR MX HINGE FIXING
12. MX HINGE PART
13. GRUB SCREW FOR PIN LOCKING
14. GRUB SCREW FOR BUSHING BLOCKING
15. PRELOAD PLATE

WinDoor INCORPORATED
7500 AMSTERDAM DRIVE
ORLANDO, FL 32832
Phone: 407.481.8400
Fax: 407.481.0505
www.windoorinc.com

SERIES 9050 THERMALLY BROKEN ALUMINUM INSWING/OUTSWING TERRACE DOOR – IMPACT COMPONENTS

DRAWN:	DWG NO.	REV
TJH	08-01153	–

SCALE	DATE	SHEET
NTS	11/10/10	17 OF 17

Luis R. Lomas P.E.
Texas No. 101889