plastpro

5200 W. CENTURY BLVD.
LOS ANGELES, CA 90045

OPAQUE FIBERGLASS SINGLE DOOR
FIRE RATED
INSWING / OUTSWING
"IMPACT"

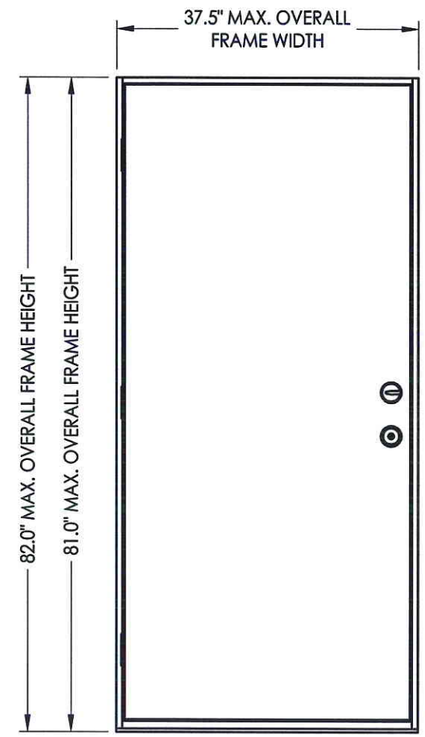

EVALUATED FOR USE IN THE STATE OF TEXAS

The Fiberglass Door described herein complies with the 2006 International Residential Code (IRC), Sections R301 & R613 and the 2006 International Building Code (IBC), Sections 1405.12, 1609, 1714.5, 2403 and 2404 (including Texas revisions) subject to the following conditions:

1. Anchors shall be as listed and spaced as shown in the details. Anchor embedment to base material shall be beyond wall dressing or stucco.
2. This system has been tested and evaluated as a large missile impact protective system for installation in the Seaward, Inland I and Inland II areas. This product meets missile level "D" as defined in ASTM E 1996.
3. Allowable design pressure requirements must be equal to or less than the design pressure rating shown in the design pressure chart, sheet 1 of this drawing.
4. Conditions not covered by this drawing are subject to further engineering analysis.
5. Note: Fire rating is not part of this approval and it is the responsibility of the Design Professional to verify adequacy of this product to meet Texas State requirements for fire ratings.

TABLE OF CONTENTS

SHEET#	DESCRIPTION
1	Typical elevations, design pressures & general notes
2	Door panel details
3	Vertical cross sections
4	Horizontal cross section
5	Frame anchoring
6	Bill of materials and components

CONFIGURATION	MAX. FRAME DIMENSION	DESIGN PRESSURE (PSF) INSWING		DESIGN PRESSURE (PSF) OUTSWING	
		POSITIVE	NEGATIVE	POSITIVE	NEGATIVE
X	37.5" x 82.0"	+75.0	-75.0	+75.0	-75.0

STATE OF TEXAS
LYNDON F. SCHMIDT
104123
LICENSED PROFESSIONAL ENGINEER
11-13-14

Documents Prepared By: Lyndon F. Schmidt, P.E.
TEXAS P.E. #104123
R/W BUILDING CONSULTANTS, INC.
P.O. Box 230 Valrico FL. 33595
Phone No.: 813.659.9197
TEXAS BOARD OF PROFESSIONAL ENGINEERS
CERTIFICATE OF REGISTRATION # F-11852

PRODUCT: PLASTPRO FIBERGLASS DOOR

PART OR ASSEMBLY: TYPICAL ELEVATIONS, DESIGN PRESSURES & GENERAL NOTES

NO.	DATE	REVISIONS	BY

DATE: 11/11/14
SCALE: N.T.S.
DWG. BY: JK
CHK. BY: LFS
DRAWING NO.: TX-4476
SHEET 1 OF 6

© 2014 R.W. BUILDING CONSULTANTS INC.

R:\Clients\Plastpro, Inc PERMANENT\TDI\TDI - DR 463 X Sgl Opaque Fire Door\Drawings\Current\TX-4476.dwg, TX-4476

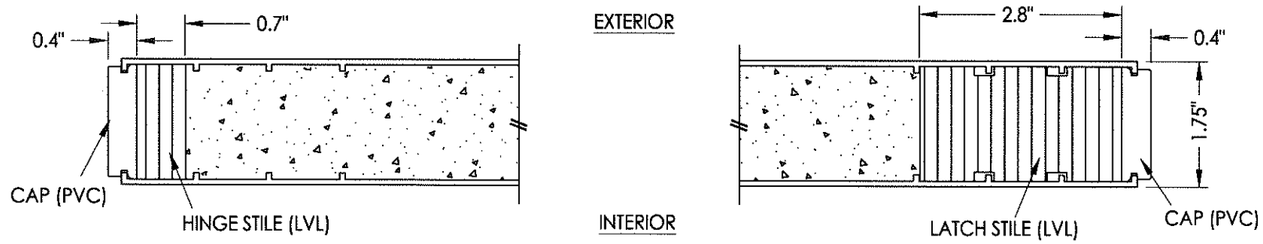

1/2 **HORIZONTAL CROSS SECTION**

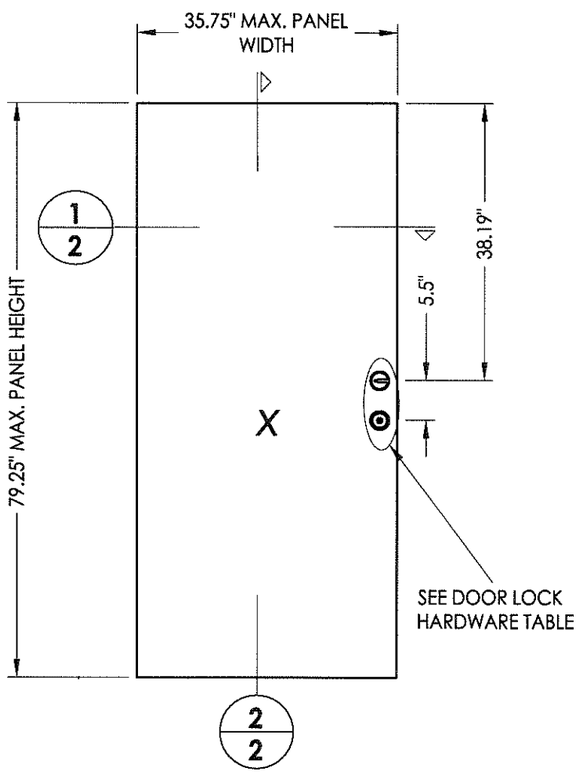

40 **PLASTPRO DOOR PANEL**

DOOR LOCK HARDWARE TABLE	
MANUFACTURER	MODEL
KWIKSET	KNOB: KWIKSET SERIES (400) DEADBOLT: KWIKSET SERIES (660)
SCHLAGE	HANDLE SET: "F" SERIES (F10) DEADBOLT: "B" SERIES (B60N)

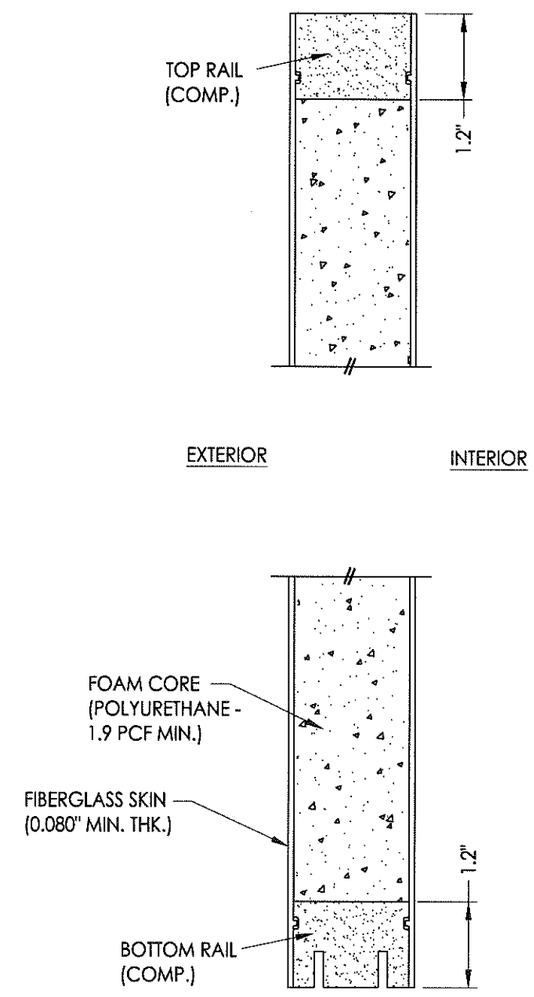

2/2 **VERTICAL CROSS SECTION**

STATE OF TEXAS
LYNDON F. SCHMIDT
104123
LICENSED
PROFESSIONAL ENGINEER
11-13-14

Documents Prepared By: Lyndon F. Schmidt, P.E.
TEXAS P.E. #104123

RW BUILDING CONSULTANTS, INC.
P.O. Box 230 Valrico FL 33595
Phone No.: 813.659.9197

TEXAS BOARD OF PROFESSIONAL ENGINEERS
CERTIFICATE OF REGISTRATION # F-11852

PRODUCT: PLASTPRO INC. FIBERGLASS DOOR

PART OR ASSEMBLY: DOOR PANEL DETAILS

NO.	DATE	REVISIONS	BY

DATE: 11/11/14
SCALE: N.T.S.
DWG. BY: JK
CHK. BY: LFS
DRAWING NO.: TX-4476
SHEET 2 OF 6

© 2014 R.W. BUILDING CONSULTANTS INC.

R:\Clients\Plastpro, Inc PERMANENT\TDI\TDI - DR 463 X Sgl Opaque Fire Door\Drawings\Current\TX-4476.dwg, 1-2

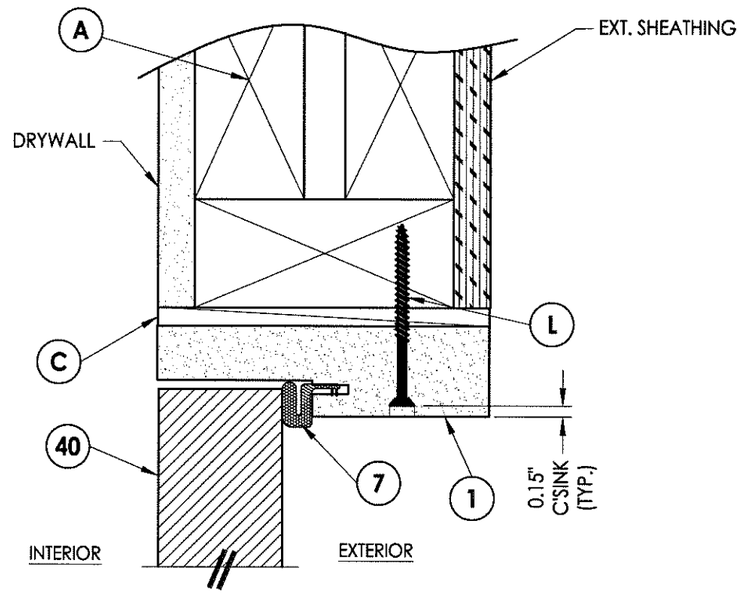

1/3 **VERTICAL CROSS SECTION**
Inswing shown (Outswing similar)

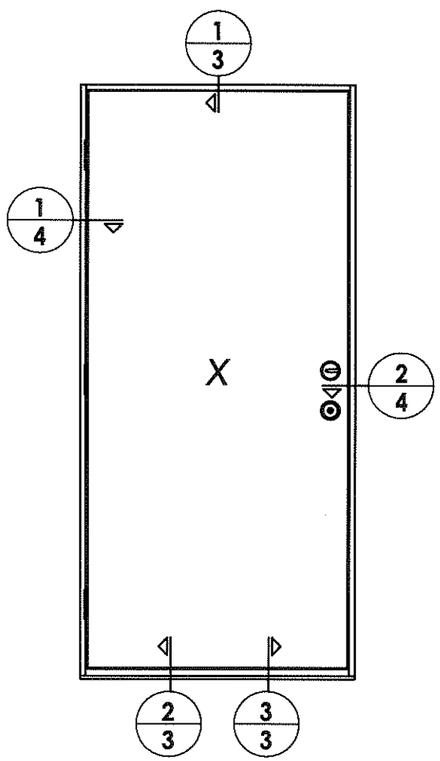

ELEVATION (X)

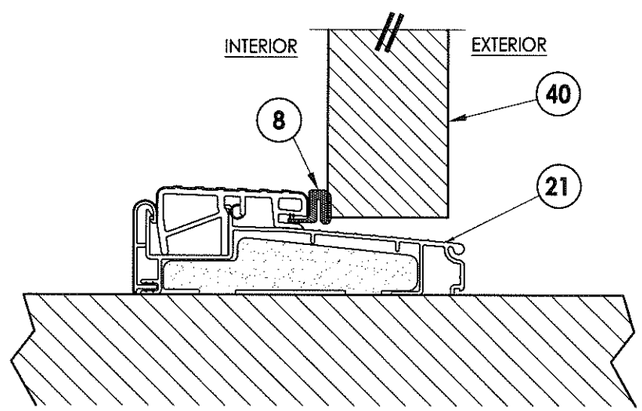

2/3 **VERTICAL CROSS SECTION**
Outswing configuration

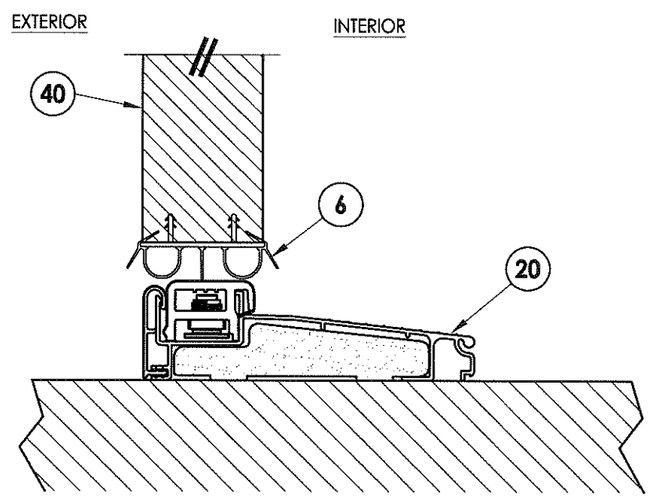

3/3 **VERTICAL CROSS SECTION**
Inswing configuration

STATE OF TEXAS
LYNDON F. SCHMIDT
104123
LICENSED
PROFESSIONAL ENGINEER
11-13-14

Documents Prepared By: Lyndon F. Schmidt, P.E.
TEXAS P.E. #104123
RW BUILDING CONSULTANTS, INC.
P.O. Box 230 Valrico FL 33595
Phone No.: 813.859.9197
TEXAS BOARD OF PROFESSIONAL ENGINEERS
CERTIFICATE OF REGISTRATION # F-11852

PRODUCT: PLASTPRO FIBERGLASS DOOR

PART OR ASSEMBLY: VERTICAL CROSS SECTIONS

NO.	DATE	REVISIONS	BY

DATE: 11/11/14
SCALE: N.T.S.
DWG. BY: JK
CHK. BY: LFS
DRAWING NO.: TX-4476
SHEET 3 OF 6

© 2014 R.W. BUILDING CONSULTANTS INC.

R:\Clients\Plastpro, Inc PERMANENT\TDI\TDI - DR 463 X Sgl Opaque Fire Door\Drawings\Current\TX-4476.dwg, 1-3

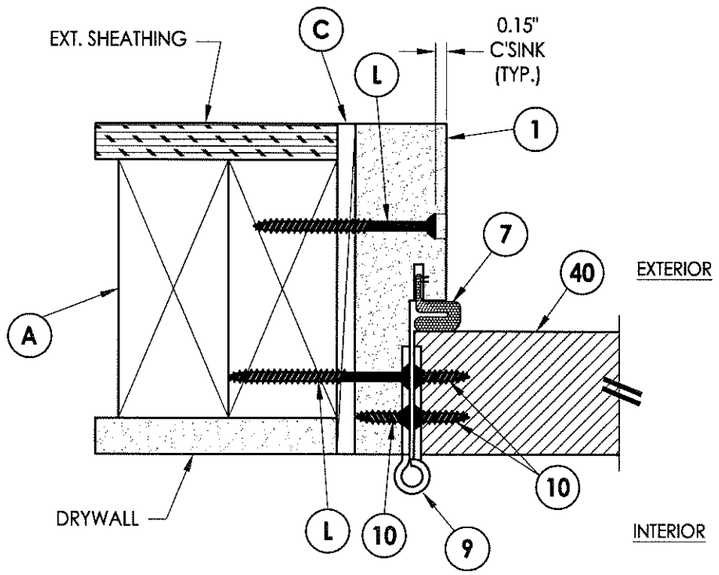

1/4 **HORIZONTAL CROSS SECTION**
Inswing shown (Outswing similar)

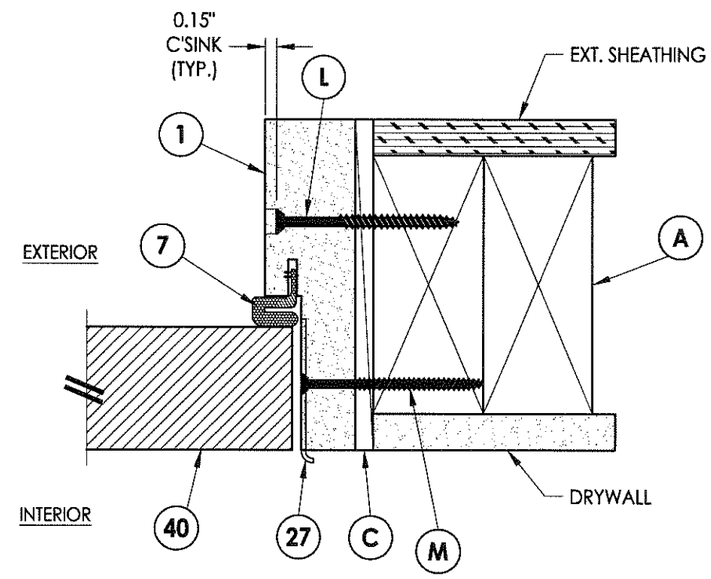

2/4 **HORIZONTAL CROSS SECTION**
Inswing shown (Outswing similar)

STATE OF TEXAS
LYNDON F. SCHMIDT
104123
LICENSED
PROFESSIONAL ENGINEER
11-13-14

Documents Prepared By: Lyndon F. Schmidt, P.E.
TEXAS P.E. #104123

RW BUILDING CONSULTANTS, INC.
P.O. Box 230 Valrico FL, 33595
Phone No.: 813.659.9197

TEXAS BOARD OF PROFESSIONAL ENGINEERS
CERTIFICATE OF REGISTRATION # F-11852

PRODUCT: PLASTPRO FIBERGLASS DOOR

PART OR ASSEMBLY: HORIZONTAL CROSS SECTIONS

NO.	DATE	REVISIONS	BY

DATE: 11/11/14
SCALE: N.T.S.
DWG. BY: JK
CHK. BY: LFS
DRAWING NO.: TX-4476
SHEET 4 OF 6

© 2014 R.W. BUILDING CONSULTANTS INC.

R:\Clients\Plastpro, Inc PERMANENT\TDI\TDI - DR 463 X Sgl Opaque Fire Door\Drawings\Current\TX-4476.dwg, 1-4

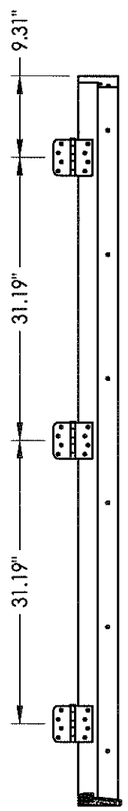

HINGE JAMB

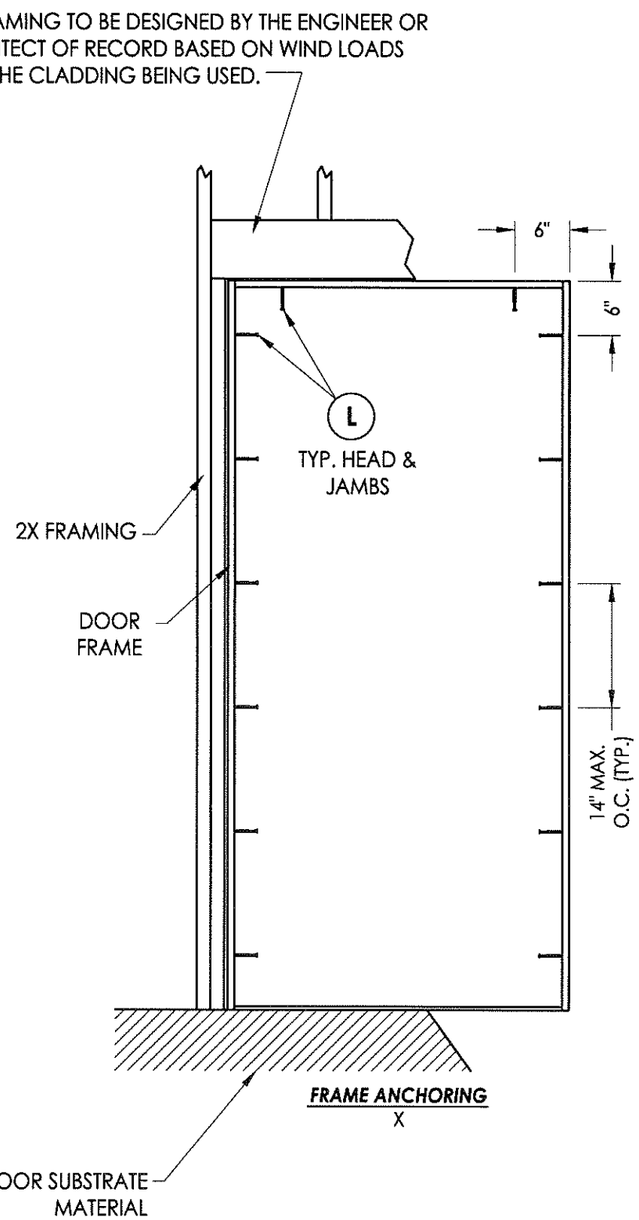

FRAME ANCHORING
X

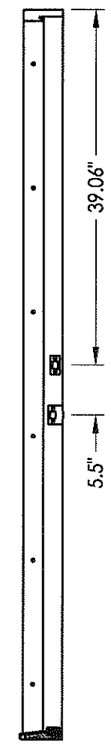

STRIKE JAMB

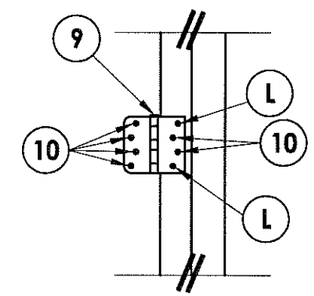

HINGE DETAIL

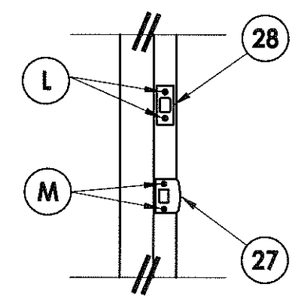

LATCH & DEADBOLT DETAIL

STATE OF TEXAS
LYNDON F. SCHMIDT
104123
LICENSED
PROFESSIONAL ENGINEER

11-13-14

Documents Prepared By: Lyndon F. Schmidt, P.E.
TEXAS P.E. #104123

RW BUILDING CONSULTANTS, INC.
P.O. Box 230 Valrico FL. 33595
Phone No.: 813.659.9197

TEXAS BOARD OF PROFESSIONAL ENGINEERS
CERTIFICATE OF REGISTRATION # F-11852

PRODUCT: PLASTPRO FIBERGLASS DOOR

PART OR ASSEMBLY: FRAME ANCHORING

NO.	DATE	REVISIONS	BY

DATE: 11/11/14
SCALE: N.T.S.
DWG. BY: JK
CHK. BY: LFS
DRAWING NO.: TX-4476
SHEET 5 OF 6

© 2014 R.W. BUILDING CONSULTANTS INC.

R:\Clients\Plastpro, Inc PERMANENT\TDI\TDI - DR 463 X Sgl Opaque Fire Door\Drawings\Current\TX-4476.dwg, 1-5

BILL OF MATERIALS		
ITEM #	DESCRIPTION	MATERIAL
A	2X FRAMING (SG >= 0.42)	WOOD
C	1/4" MAX. SHIM SPACE	-
L	#10 X 2-1/2" PFH WOOD SCREW (1.15" MIN. EMB.)	STEEL
M	#8 X 2-1/2" PFH WOOD SCREW	STEEL
1	POLY FIBER JAMB	COMP.
6	DOOR SWEEP	PVC
7	WEATHERSTRIP (Q-LON)	FOAM
8	WEATHERSTRIP (ENDURA FORCE 5)	FOAM
10	#10 x 1" PFH WOOD SCREW	STEEL
11	4" X 4" HINGE	STEEL
20	INSWING THRESHOLD	ALUM/COMP
21	OUTSWING THRESHOLD	ALUM/COMP
27	LATCH STRIKE PLATE	STEEL
28	DEADBOLT STRIKE PLATE	STEEL
40	DOOR PANEL	-

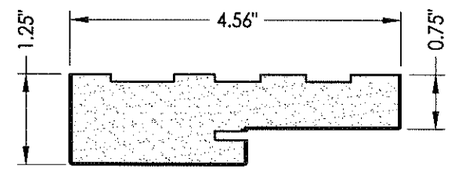

1 **HEAD & SIDE JAMBS**
Poly Fiber

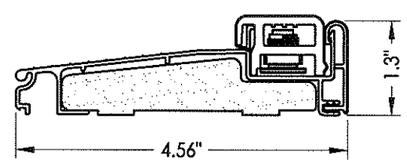

20 **INSWING THRESHOLD**
Endura (Z-Series)

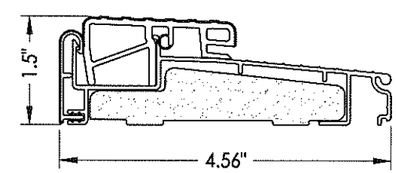

21 **OUTSWING THRESHOLD**
Endura (Z-Series)

NOTE:
1. 6-9/16" jamb (PF) may be substituted for a 4-9/16" jamb as needed.

STATE OF TEXAS
LYNDON F. SCHMIDT
104123
LICENSED PROFESSIONAL ENGINEER

11-13-14

Documents Prepared By: Lyndon F. Schmidt, P.E.
TEXAS P.E. #104123

RW BUILDING CONSULTANTS, INC.
P.O. Box 230 Valrico FL. 33595
Phone No.: 813.659.9197

TEXAS BOARD OF PROFESSIONAL ENGINEERS
CERTIFICATE OF REGISTRATION # F-11852

PRODUCT: PLASTPRO FIBERGLASS DOOR

PART OR ASSEMBLY: COMPONENTS, MULTI-POINT LOCK DETAILS & B.O.M.

NO.	DATE	REVISIONS	BY

DATE: 11/11/14
SCALE: N.T.S.
DWG. BY: JK
CHK. BY: LFS
DRAWING NO.: TX-4476
SHEET 6 OF 6

© 2014 R.W. BUILDING CONSULTANTS INC.

R:\Clients\Plastpro, Inc PERMANENT\TDI\TDI - DR 463 X Sgl Opaque Fire Door\Drawings\Current\TX-4476.dwg, 1-6