plastpro

5200 W. CENTURY BLVD.
LOS ANGELES, CA 90045

GLAZED FIBERGLASS DOUBLE DOOR
w/ or w/o SIDELITES
INSWING / OUTSWING
"NON-IMPACT"

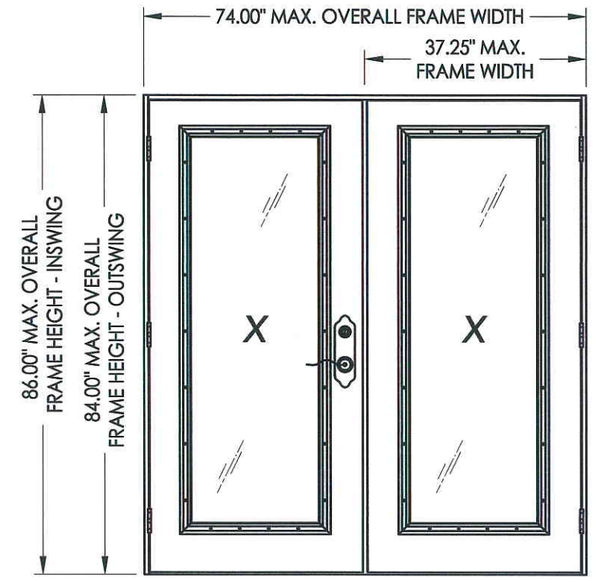

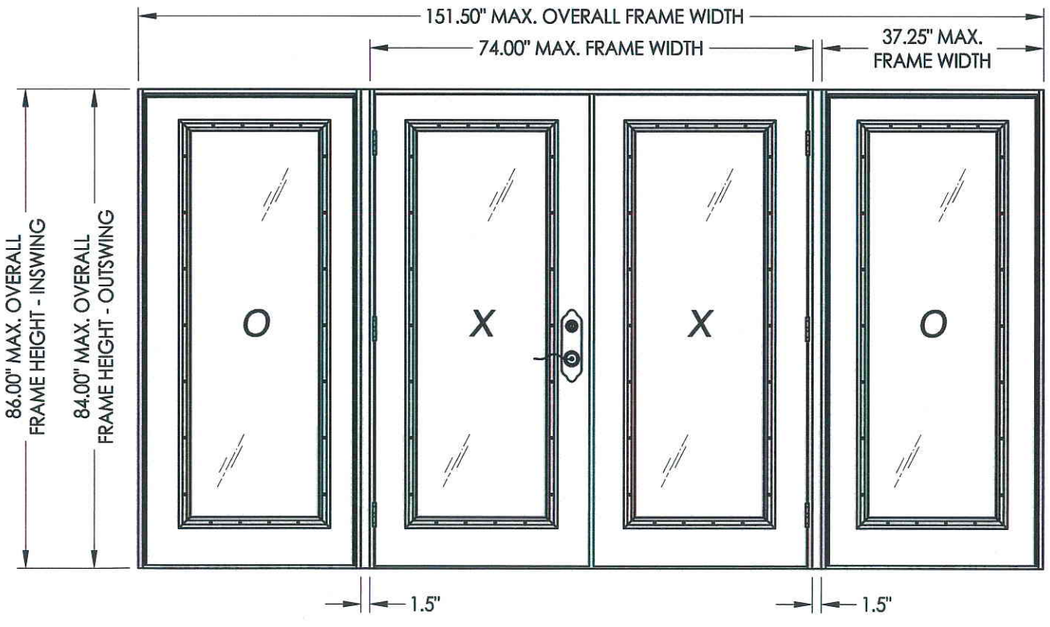

EVALUATED FOR USE IN THE STATE OF TEXAS

The Plastpro Fiberglass Door described herein complies with the 2006 International Residential Code (IRC), Sections R301 & R613 and the 2006 International Building Code (IBC), Sections 1405.12, 1609, 1714.5, 2403 and 2404 (including Texas revisions) subject to the following conditions:

1. Anchors shall be as listed and spaced as shown in the details. Anchor embedment to base material shall be beyond wall dressing or stucco.
2. When used in areas requiring wind-borne debris protection this product is required to be protected with an impact resistant covering that complies with Section R301.2.1.2 of the IRC and Section 1609.1.2 of the IBC.
3. Allowable design pressure requirements must be equal to or less than the design pressure rating shown in the design pressure chart, sheet 1 of this drawing.
4. Conditions not covered by this drawing are subject to further engineering analysis.

SUPPORTING DOCUMENTS & EVIDENCE

1. Testing per AAMA/WDMA/CSA 101/I.S.2/A440-05:
   Testing Evaluation Laboratories, Inc. test report(s) #: TEL 01390241.
2. Calculations (Anchoring and Glass load resistance report ASTM E1300-04) prepared by Lyndon F. Schmidt, P.E.
3. Certificate of Participation issued by the National Accreditation and Management Institute, Inc., certifying that Plastpro is manufacturing products within a Quality Assurance program.

TABLE OF CONTENTS

SHEET #	DESCRIPTION
1	Typical elevations, design pressures & general notes
2	Door panel & glazing details
3	Sidelite panel & glazing details
4	Elevations
5	Horizontal cross sections
6	Vertical cross sections
7	Frame anchoring
8	Frame anchoring
9	Astragal & multi-point lock details
10	Components
11	Bill of materials

CONFIGURATION	MAX. FRAME DIMENSION	MAX. D.L.O. DIMENSION	GLASS TYPE	DESIGN PRESSURE (PSF) INSWING		DESIGN PRESSURE (PSF) OUTSWING	
				POSITIVE	NEGATIVE	POSITIVE	NEGATIVE
XX	74.00" x 86.00"	21.00" x 62.50"	G1	+45.0	-45.0	+45.0	-45.0
OXXO	151.50" x 86.00"	21.00" x 62.50"		+45.0	-45.0	+45.0	-45.0

STATE OF TEXAS ★★★ LYNDON F. SCHMIDT 104123 LICENSED PROFESSIONAL ENGINEER 4-14-10

Documents Prepared By: Lyndon F. Schmidt, P.E.
TEXAS P.E. #104123
RW BUILDING CONSULTANTS, INC.
P.O. Box 230 Valrico FL. 33595
Phone No.: 813.659.9197
TEXAS BOARD OF PROFESSIONAL ENGINEERS
CERTIFICATE OF REGISTRATION # F-11852

PRODUCT: PLASTPRO FIBERGLASS DOOR

PART OR ASSEMBLY: TYPICAL ELEVATION, DESIGN PRESSURES & GENERAL NOTES

NO.	DATE	BY
REVISIONS		

DATE: 03/25/10
SCALE: N.T.S.
DWG. BY: AL
CHK. BY: LFS
DRAWING NO.: TX-4061
SHEET 1 OF 11

© 2010 R.W. BUILDING CONSULTANTS INC.

R:\A - Projects\Project Folders\proj 1501 - 1600\PF 1512\D. RWBC Drawings\TEXAS 2010\TX 7-0 FG NI.dwg, TX-4061

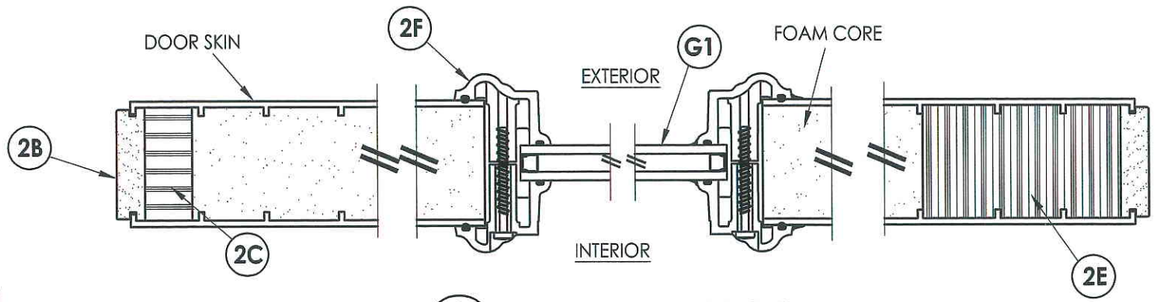

1/2 HORIZONTAL CROSS SECTION

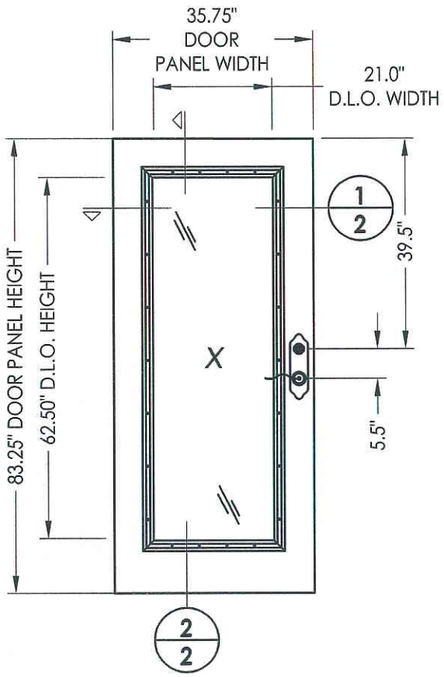

40 DOOR PANEL

FIBERGLASS DOOR SKIN: MIN. 0.075" THK. (Fy = 11063 PSI MIN.)
CORE MATERIAL: POLYURETHANE FOAM (BASF, MIN. 1.9 PCF DENSITY)

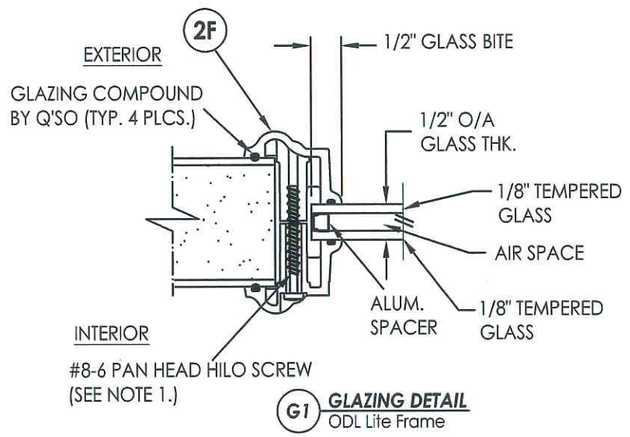

G1 GLAZING DETAIL
ODL Lite Frame

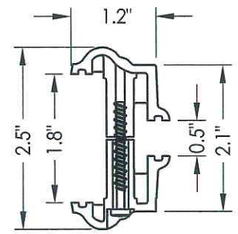

2F PLASTIC LIP LITE FRAME
ODL

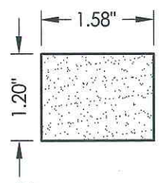

2A TOP RAIL
Cellular PVC

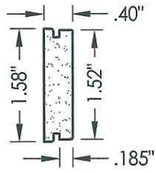

2B LATCH & HINGE STILE
Cellular PVC

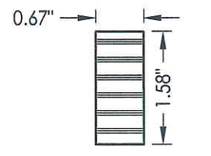

2C HINGE STILE
LVL Reinforcement

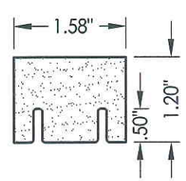

2D BOTTOM RAIL
Cellular PVC

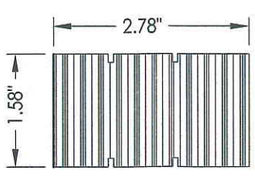

2E LATCH STILE
LVL Reinforcement

NOTE:
1. Spacing for lite frame screws is as follows:
   Sides: 6.5" from corners and 10.0" o.c. thereafter
   Top & Bottom: 4.5" from corners and 6.5" o.c. therafter

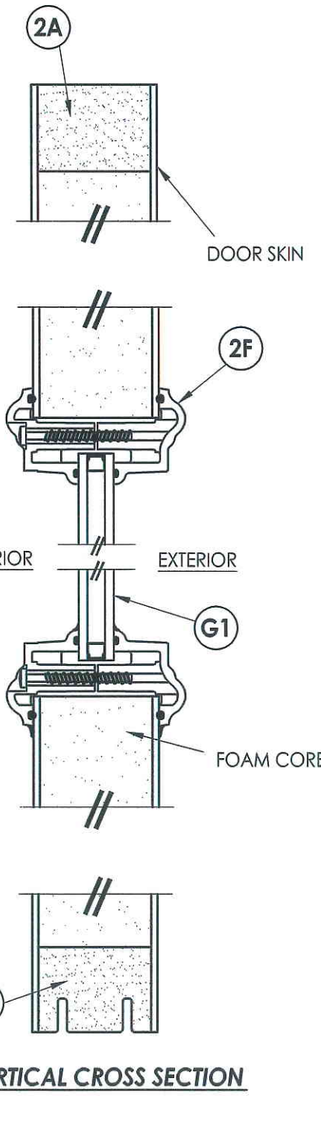

2/2 VERTICAL CROSS SECTION

STATE OF TEXAS
LYNDON F. SCHMIDT
104123
LICENSED PROFESSIONAL ENGINEER
4-14-10

Documents Prepared By: Lyndon F. Schmidt, P.E.
TEXAS P.E. #104123

RW BUILDING CONSULTANTS, INC.
P.O. Box 230 Valrico FL. 33595
Phone No.: 813.659.9197

TEXAS BOARD OF PROFESSIONAL ENGINEERS
CERTIFICATE OF REGISTRATION # F-11852

PRODUCT: *PLASTPRO FIBERGLASS DOOR*

PART OR ASSEMBLY: *DOOR PANEL & GLAZING DETAILS*

NO.	DATE	REVISIONS	BY

DATE: 03/25/10
SCALE: N.T.S.
DWG. BY: AL
CHK. BY: LFS
DRAWING NO.: TX-4061
SHEET 2 OF 11

© 2010 R.W. BUILDING CONSULTANTS INC.

\\sbs2k3\RWBCVA - Projects\Project Folders\proj 1501 - 1600\PF 1512\D. RWBC Drawings\TEXAS 2010\TX 7-0 FG NI.dwg, 2-2

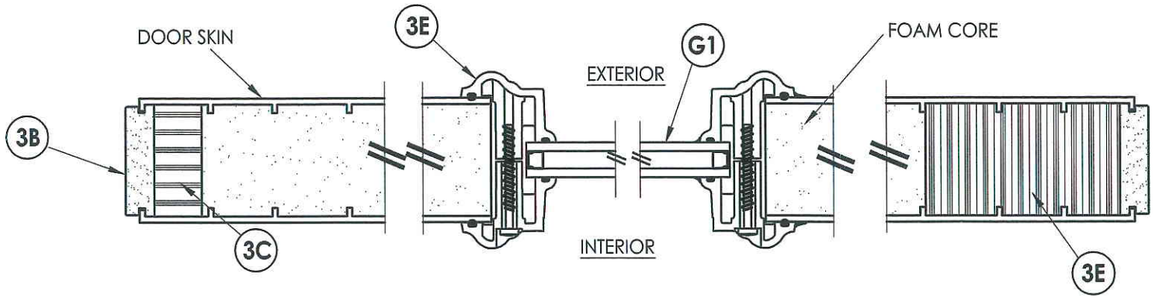

1/3 HORIZONTAL CROSS SECTION

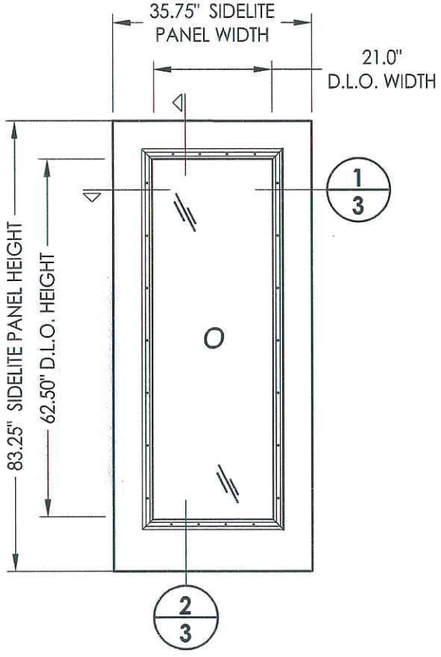

50 SIDELITE PANEL

FIBERGLASS SIDELITE SKIN: MIN. 0.075" THK. (Fy = 11063 PSI MIN.)
CORE MATERIAL: POLYURETHANE FOAM (BASF, MIN. 1.9 PCF DENSITY)

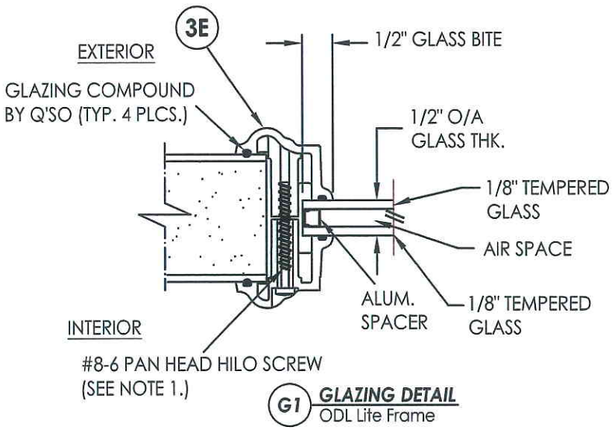

G1 GLAZING DETAIL
ODL Lite Frame

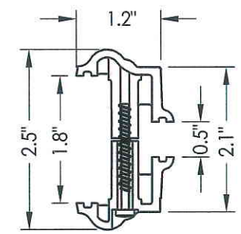

3E PLASTIC LIP LITE FRAME
ODL

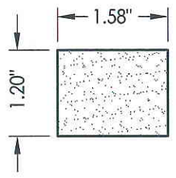

3A TOP RAIL
Cellular PVC

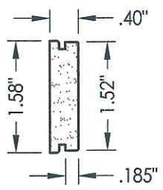

3B STILE
Cellular PVC

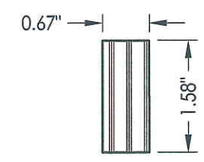

3C STILE
LVL Reinforcement

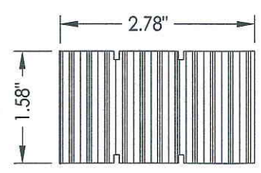

3E STILE
LVL Reinforcement

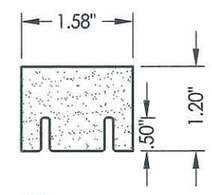

3D BOTTOM RAIL
Cellular PVC

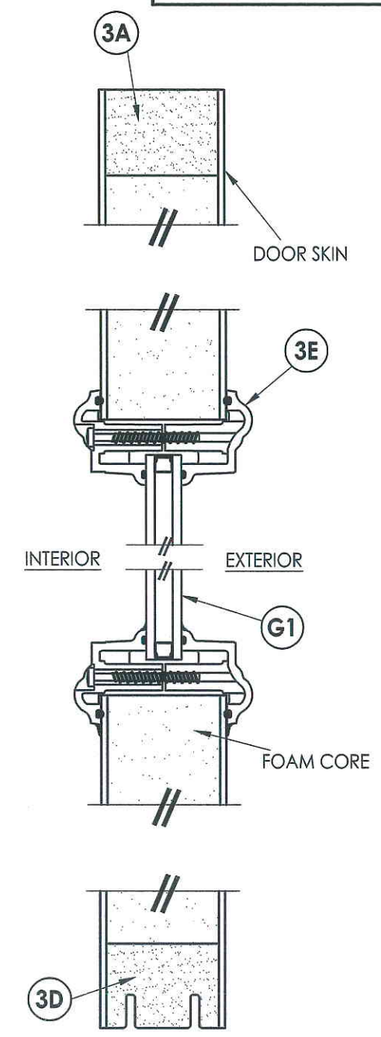

2/3 VERTICAL CROSS SECTION

NOTE:
1. Spacing for lite frame screws is as follows:
Sides: 6.5" from corners and 10.0" o.c. thereafter
Top & Bottom: 4.5" from corners and 6.5" o.c. therafter

STATE OF TEXAS
LYNDON F. SCHMIDT
104123
LICENSED PROFESSIONAL ENGINEER
4-14-10

Documents Prepared By: Lyndon F. Schmidt, P.E.
TEXAS P.E. #104123
RW BUILDING CONSULTANTS, INC.
P.O. Box 230 Valrico FL. 33595
Phone No.: 813.659.9197
TEXAS BOARD OF PROFESSIONAL ENGINEERS
CERTIFICATE OF REGISTRATION # F-11852

PRODUCT: PLASTPRO FIBERGLASS DOOR

PART OR ASSEMBLY: SIDELITE PANEL & GLAZING DETAILS

NO.	DATE	REVISIONS	BY

DATE: 03/25/10
SCALE: N.T.S.
DWG. BY: AL
CHK. BY: LFS
DRAWING NO.: TX-4061
SHEET 3 OF 11

© 2010 R.W. BUILDING CONSULTANTS INC.

\\sbs2k3\RWBC\A - Projects\Project Folders\proj 1501 - 1600\PF 1512\D. RWBC Drawings\TEXAS 2010\TX 7-0 FG NI.dwg, 2-3

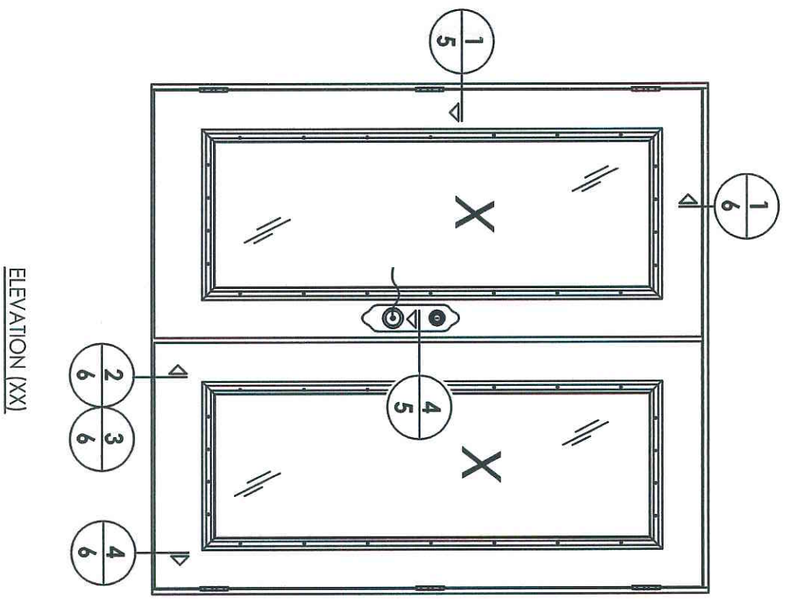

ELEVATION (XX)

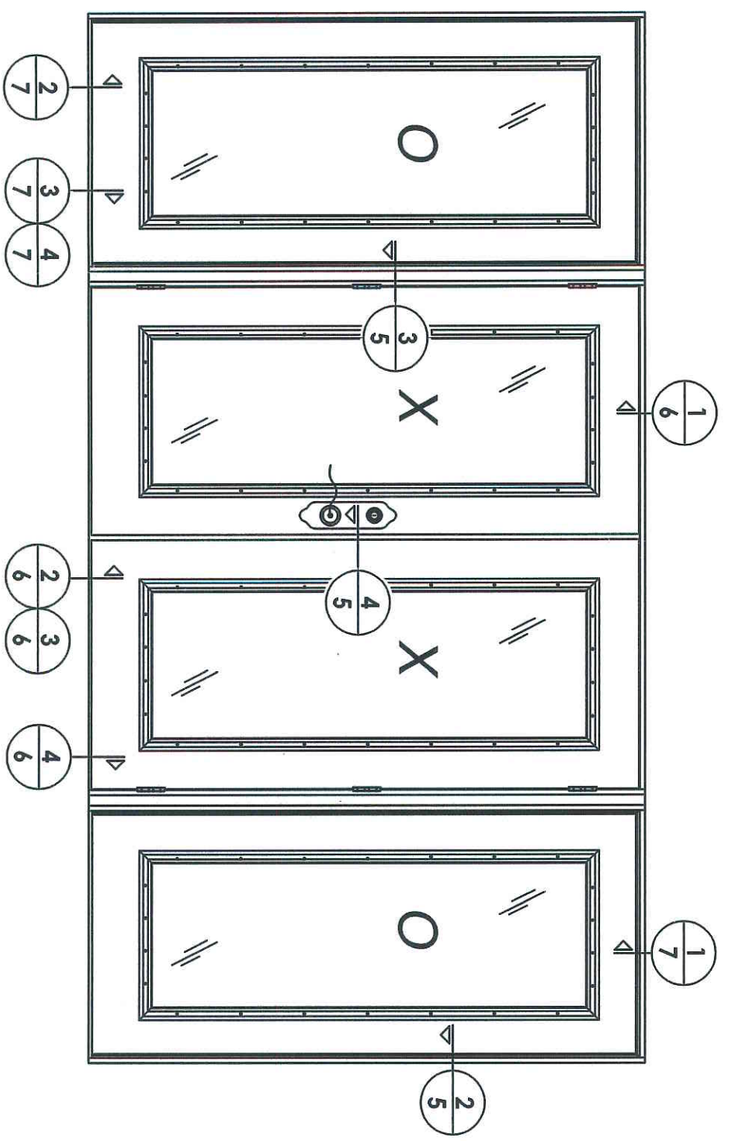

ELEVATION (OXXO)

STATE OF TEXAS
LYNDON F. SCHMIDT
104123
LICENSED
PROFESSIONAL ENGINEER
4-14-10

NO.	DATE	REVISIONS	BY

DATE: 03/25/10
SCALE: N.T.S.
DWG. BY: AL
CHK. BY: LFS
DRAWING NO.: TX-4061
SHEET 4 OF 11

PRODUCT:
PLASTPRO FIBERGLASS DOOR

PART OR ASSEMBLY:
ELEVATIONS

Documents Prepared By: Lyndon F. Schmidt, P.E.
TEXAS P.E. #104123

RW BUILDING CONSULTANTS, INC.
P.O. Box 230 Valrico FL. 33595
Phone No.: 813.659.9197

TEXAS BOARD OF PROFESSIONAL ENGINEERS
CERTIFICATE OF REGISTRATION # F-11852

© 2010 R.W. Building Consultants Inc.

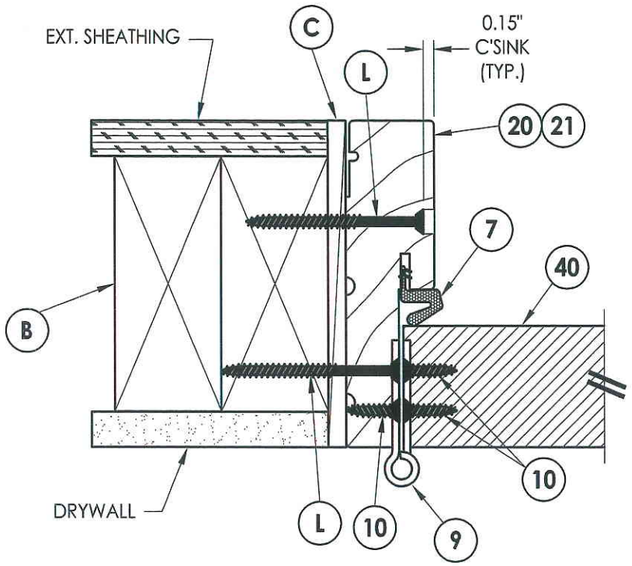

1/5 **HORIZONTAL CROSS SECTION**
Inswing shown - outswing also approved

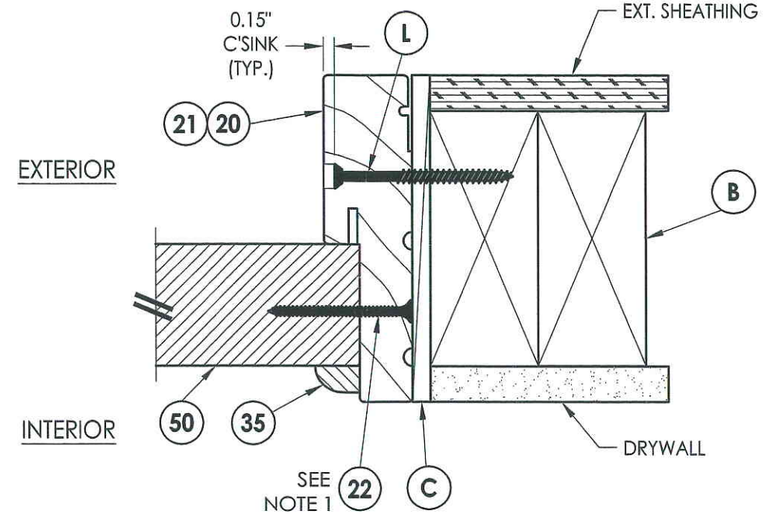

2/5 **HORIZONTAL CROSS SECTION**
Inswing shown - outswing also approved

NOTE:

1. Sidelite screws (item #22) located at 3", 6", 16", 27", 38", 49", 60", 70" and 80" from bottom of panel.

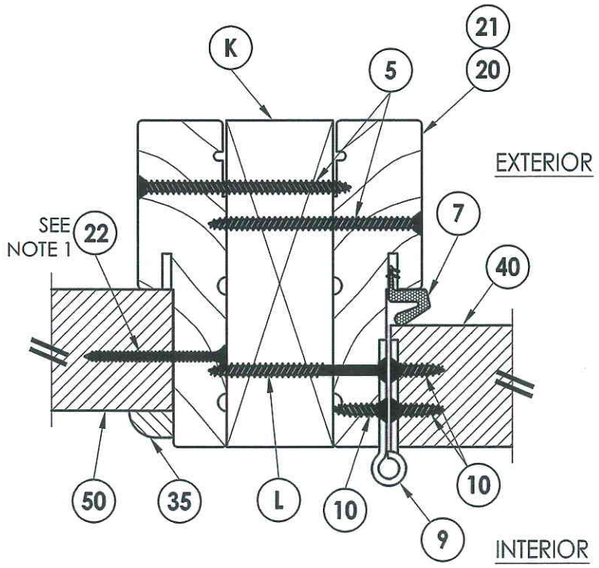

3/5 **HORIZONTAL CROSS SECTION**
Inswing shown - outswing also approved

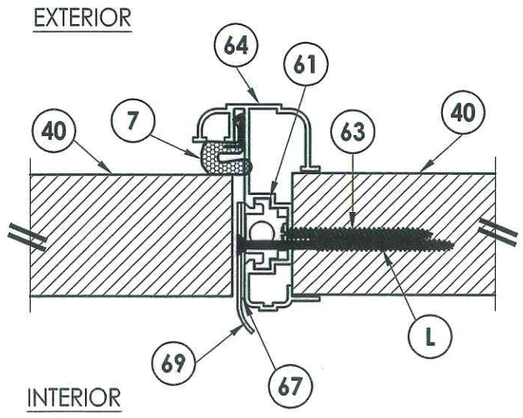

4/5 **HORIZONTAL CROSS SECTION**
Inswing shown - outswing also approved

STATE OF TEXAS
LYNDON F. SCHMIDT
104123
LICENSED
PROFESSIONAL ENGINEER
4-14-10

Documents Prepared By: Lyndon F. Schmidt, P.E.
TEXAS P.E. #104123

RW BUILDING CONSULTANTS, INC.
P.O. Box 230 Valrico FL. 33595
Phone No.: 813.659.9197

TEXAS BOARD OF PROFESSIONAL ENGINEERS
CERTIFICATE OF REGISTRATION # F-11852

PRODUCT: *PLASTPRO FIBERGLASS DOOR*

PART OR ASSEMBLY: *HORIZONTAL CROSS SECTIONS*

NO.	DATE	BY
	REVISIONS	

DATE: 03/25/10
SCALE: N.T.S.
DWG. BY: AL
CHK. BY: LFS
DRAWING NO.: TX-4061
SHEET 5 OF 11

© 2010 R.W. BUILDING CONSULTANTS INC.

R:\A - Projects\Project Folders\proj 1501 - 1600\PF 1512\D. RWBC Drawings\TEXAS 2010\TX 7-0 FG NI.dwg, 2-5

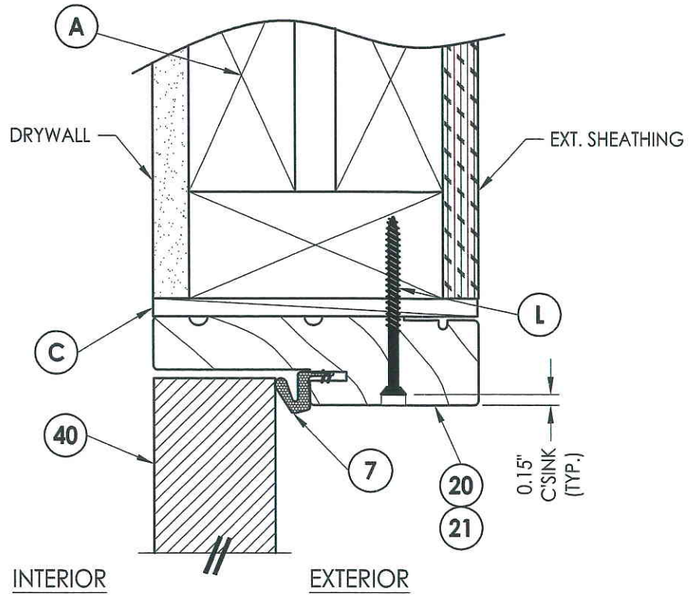

1/6 **VERTICAL CROSS SECTION**
Inswing shown - outswing also approved

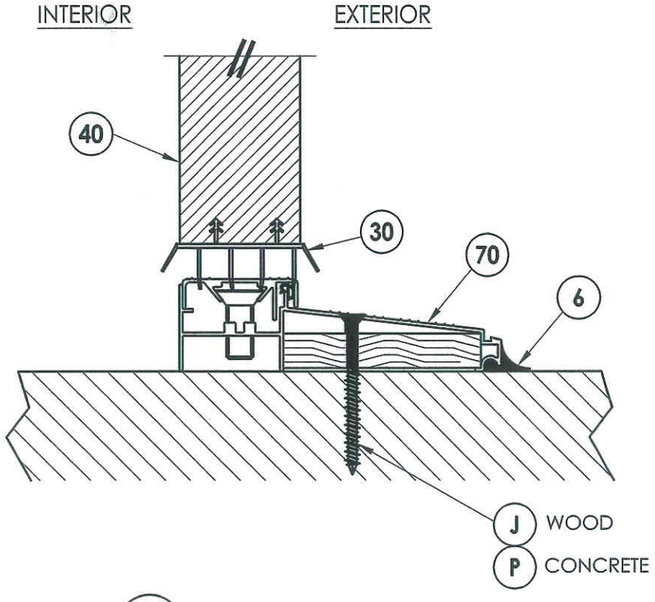

2/6 **VERTICAL CROSS SECTION**
Inswing configuration

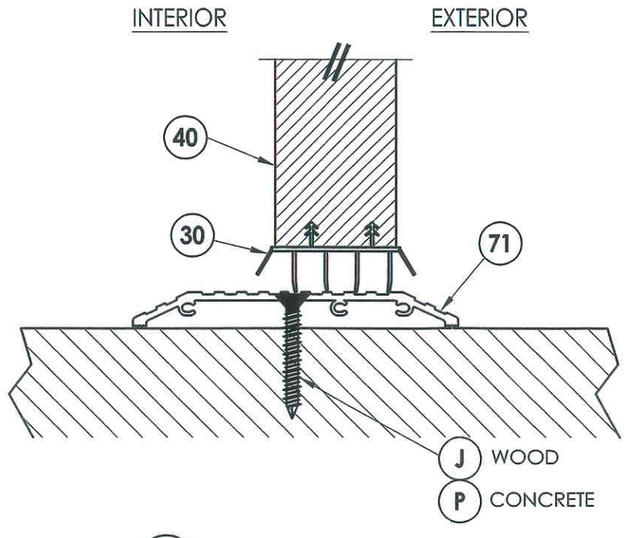

3/6 **VERTICAL CROSS SECTION**
Shown w/ ADA threshold

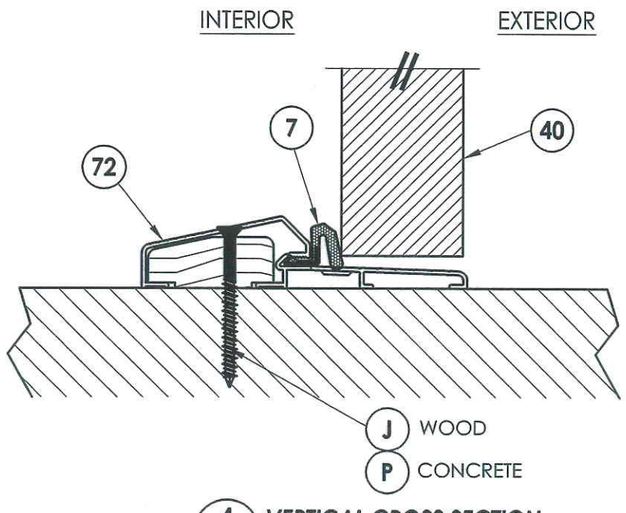

4/6 **VERTICAL CROSS SECTION**
Outswing configuration

Documents Prepared By: Lyndon F. Schmidt, P.E.
TEXAS P.E. #104123

R|W BUILDING CONSULTANTS, INC.
P.O. Box 230 Valrico FL. 33595
Phone No.: 813.659.9197

TEXAS BOARD OF PROFESSIONAL ENGINEERS
CERTIFICATE OF REGISTRATION # F-11852

STATE OF TEXAS · LYNDON F. SCHMIDT · 104123 · LICENSED PROFESSIONAL ENGINEER

PRODUCT: PLASTPRO FIBERGLASS DOOR

PART OR ASSEMBLY: VERTICAL CROSS SECTIONS

NO.	DATE	REVISIONS	BY

DATE: 03/25/10
SCALE: N.T.S.
DWG. BY: AL
CHK. BY: LFS
DRAWING NO.: TX-4061
SHEET 6 OF 11

© 2010 R.W. BUILDING CONSULTANTS INC.

R:\A - Projects\Project Folders\proj 1501 - 1600\PF 1512\D. RWBC Drawings\TEXAS 2010\TX 7-0 FG NI.dwg, 2-6

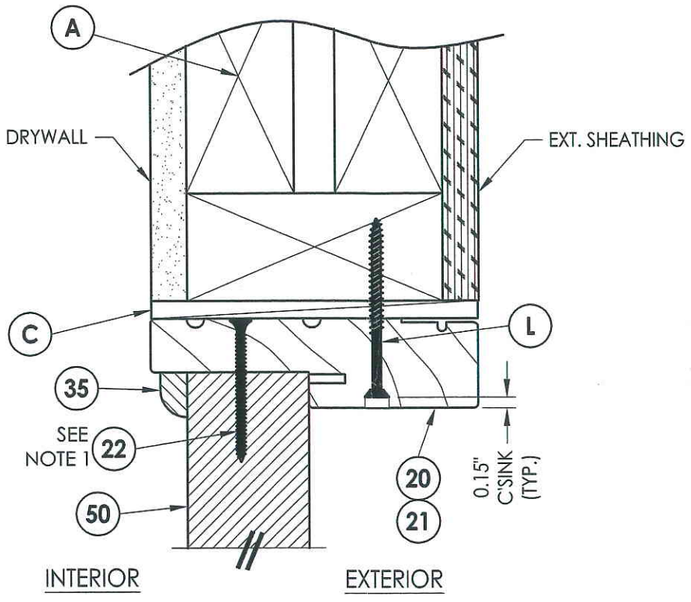

1/7 **VERTICAL CROSS SECTION**
Inswing shown - outswing also approved

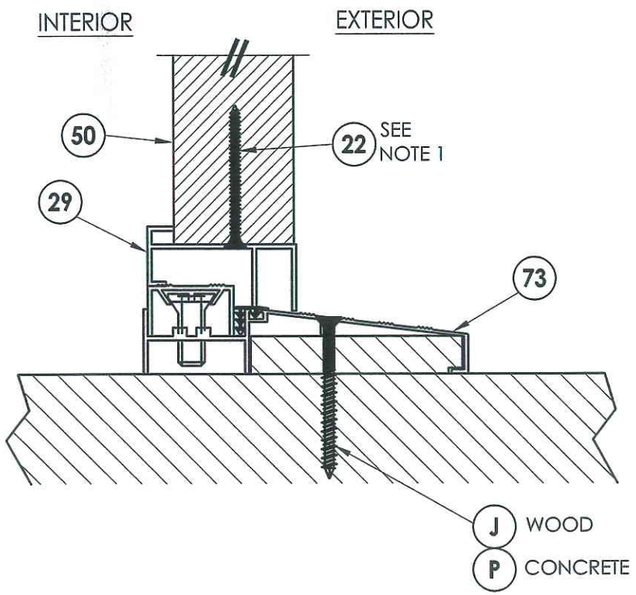

2/7 **VERTICAL CROSS SECTION**
Inswing configuration

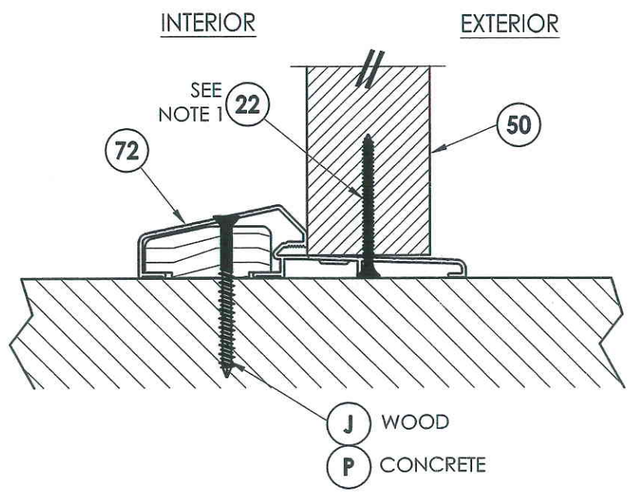

3/7 **VERTICAL CROSS SECTION**
Outswing configuration

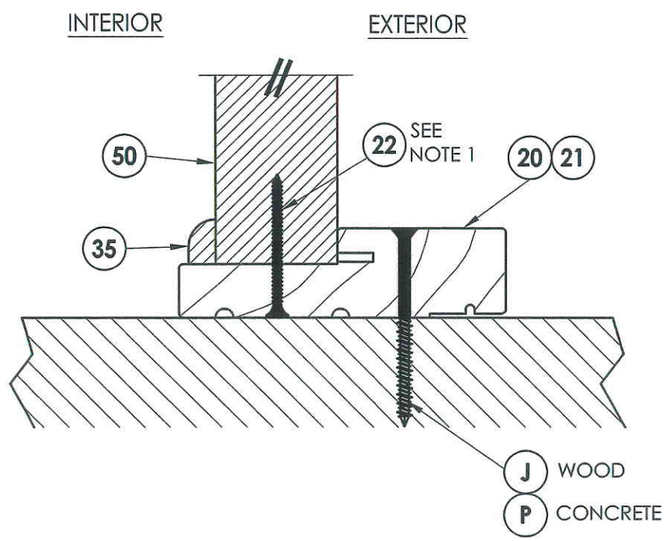

4/7 **VERTICAL CROSS SECTION**
Outswing configuration

NOTE:

1. Screws thru head and sill jamb located 3" from each end and on center line.

STATE OF TEXAS
LYNDON F. SCHMIDT
104123
LICENSED PROFESSIONAL ENGINEER
4-4-10

Documents Prepared By: Lyndon F. Schmidt, P.E.
TEXAS P.E. #104123

RW BUILDING CONSULTANTS, INC.
P.O. Box 230 Valrico FL. 33595
Phone No.: 813.659.9197

TEXAS BOARD OF PROFESSIONAL ENGINEERS
CERTIFICATE OF REGISTRATION # F-11852

PRODUCT: *PLASTPRO FIBERGLASS DOOR*

PART OR ASSEMBLY: *VERTICAL CROSS SECTIONS*

NO.	DATE	BY
REVISIONS		

DATE: 03/25/10
SCALE: N.T.S.
DWG. BY: AL
CHK. BY: LFS
DRAWING NO.: TX-4061
SHEET 7 OF 11

© 2010 R.W. BUILDING CONSULTANTS INC.

R:\A - Projects\Project Folders\proj 1501 - 1600\PF 1512\D. RWBC Drawings\TEXAS 2010\TX 7-0 FG NI.dwg, 2-7

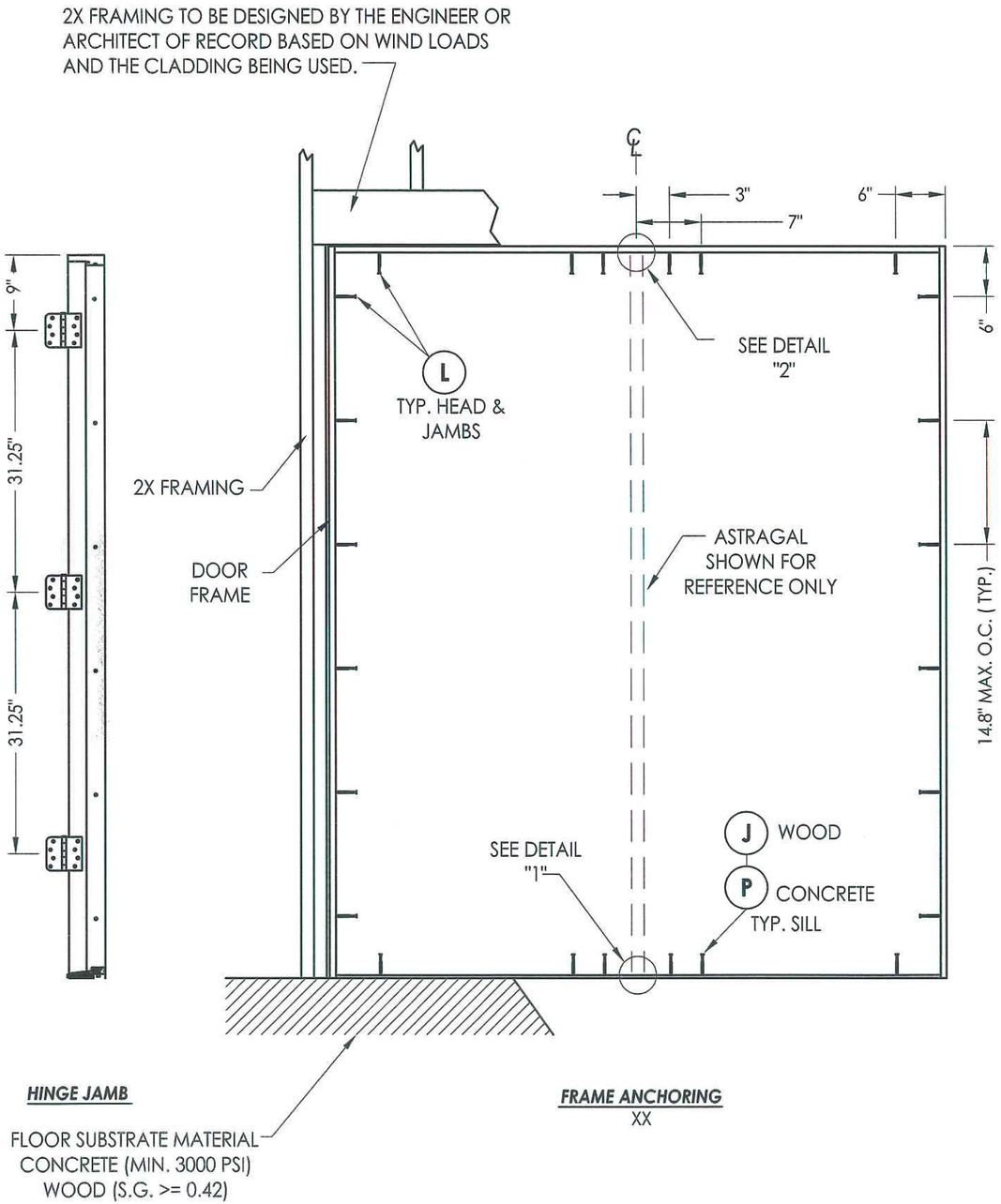

HINGE JAMB

FLOOR SUBSTRATE MATERIAL
CONCRETE (MIN. 3000 PSI)
WOOD (S.G. >= 0.42)

FRAME ANCHORING
XX

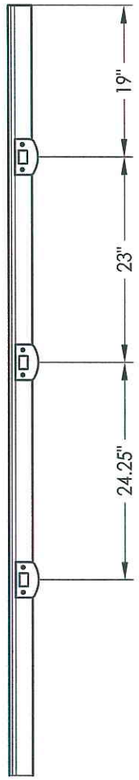

ASTRAGAL

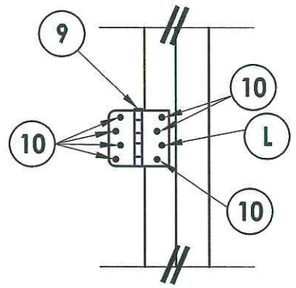

HINGE DETAIL

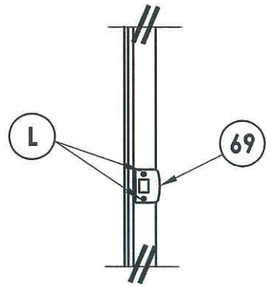

LATCH DETAIL

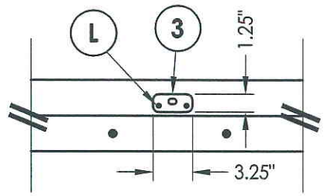

DETAIL 2

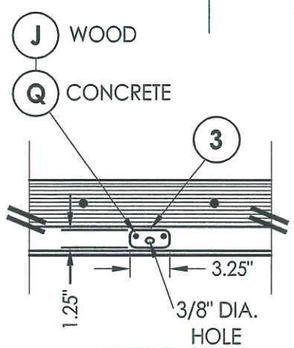

DETAIL 1
Inswing configuration

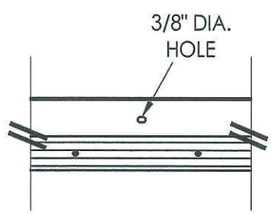

DETAIL 1
Outswing configuration

STATE OF TEXAS
LYNDON F. SCHMIDT
104123
LICENSED PROFESSIONAL ENGINEER
07-14-10

Documents Prepared By: Lyndon F. Schmidt, P.E.
TEXAS P.E. #104123

RW BUILDING CONSULTANTS, INC.
P.O. Box 230 Valrico FL. 33595
Phone No.: 813.659.9197

TEXAS BOARD OF PROFESSIONAL ENGINEERS
CERTIFICATE OF REGISTRATION # F-11852

PRODUCT: *PLASTPRO FIBERGLASS DOOR*

PART OR ASSEMBLY: *FRAME ANCHORING*

NO.	DATE	BY	REVISIONS

DATE: 03/25/10
SCALE: N.T.S.
DWG. BY: AL
CHK. BY: LFS
DRAWING NO.: TX-4061
SHEET 8 OF 11

© 2010 R.W. BUILDING CONSULTANTS INC.

R:\A - Projects\Project Folders\proj 1501 - 1600\PF 1512\D. RWBC Drawings\TEXAS 2010\TX 7-0 FG NI.dwg, 2-8

2X FRAMING TO BE DESIGNED BY THE ENGINEER OR ARCHITECT OF RECORD BASED ON WIND LOADS AND THE CLADDING BEING USED.

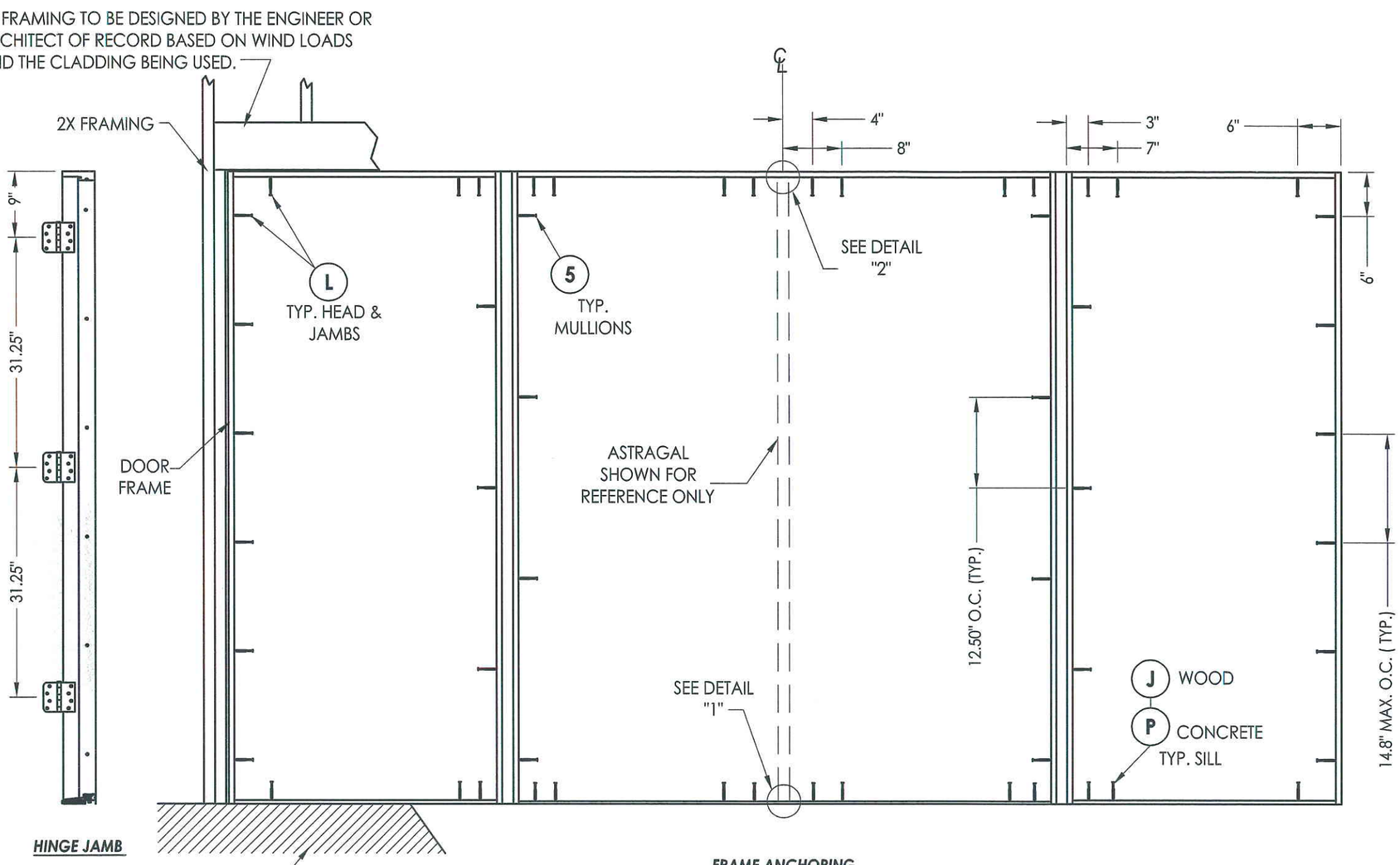

HINGE JAMB

FRAME ANCHORING
OXXO

ASTRAGAL

LATCH DETAIL

FLOOR SUBSTRATE MATERIAL
CONCRETE (MIN. 3000 PSI)
WOOD (S.G. >= 0.42)

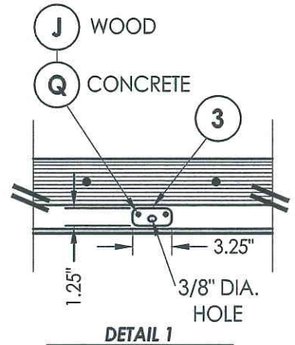

DETAIL 1
Inswing configuration

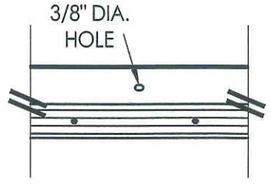

DETAIL 1
Outswing configuration

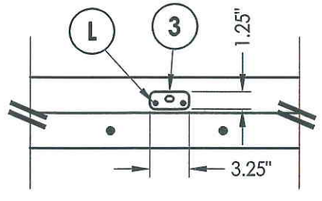

DETAIL 2

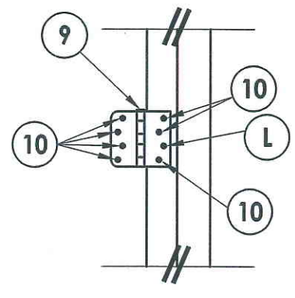

HINGE DETAIL

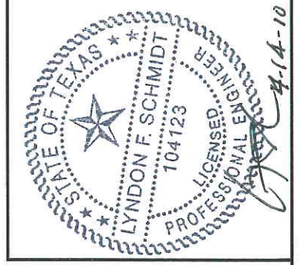

Documents Prepared By: Lyndon F. Schmidt, P.E.
TEXAS P.E. #104123

RW BUILDING CONSULTANTS, INC.
P.O. Box 230 Valrico FL. 33595
Phone No.: 813.659.9197

TEXAS BOARD OF PROFESSIONAL ENGINEERS
CERTIFICATE OF REGISTRATION # F-11852

PRODUCT: PLASTPRO FIBERGLASS DOOR

PART OR ASSEMBLY: FRAME ANCHORING

NO.	DATE	REVISIONS	BY

DATE: 03/25/10
SCALE: N.T.S.
DWG. BY: AL
CHK. BY: LFS
DRAWING NO.: TX-4061
SHEET 9 OF 11

© 2010 R.W. BUILDING CONSULTANTS INC.

R:\A - Projects\Project Folders\proj 1501 - 1600\PF 1512\D. RWBC Drawings\TEXAS 2010\TX 7-0 FG NI.dwg, 2-9

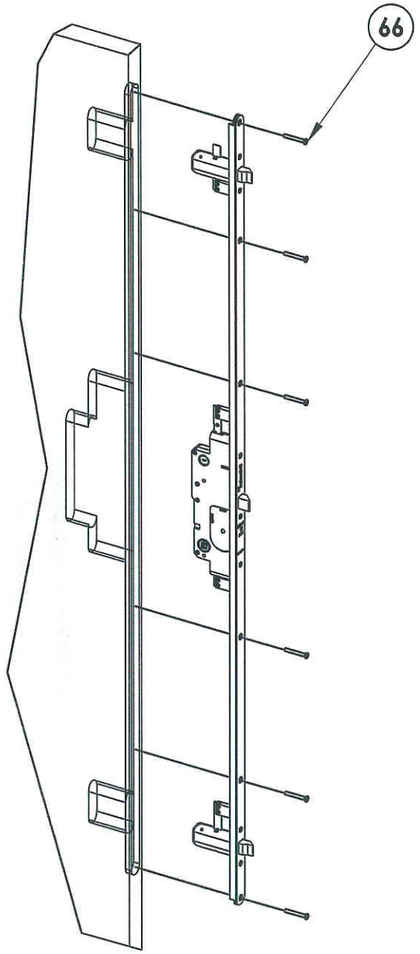

65 **MULTI-POINT LOCK**
Trilennium by W & F

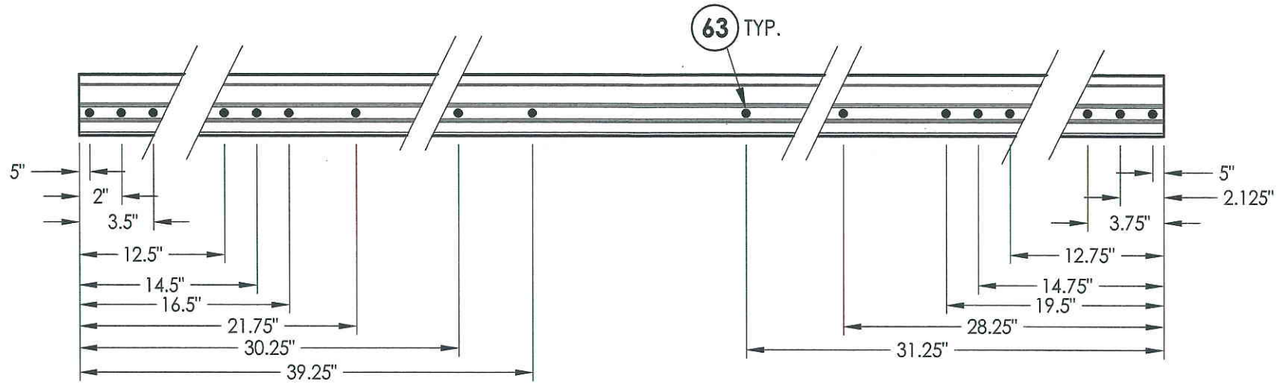

ASTRAGAL SCREW LOCATIONS

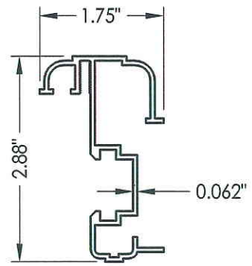

64 **ASTRAGAL**
By DLP

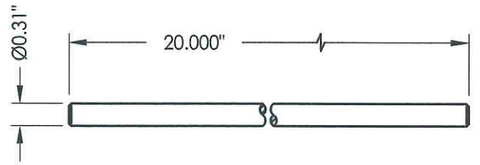

62 **SLIDE BOLT ROD**
Typ. top & bottom of astragal
top through 2.0"
bottom through 2.0"

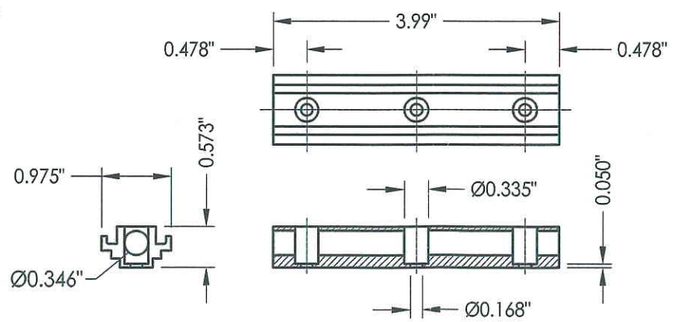

61 **CONCEALED STIFFENER**

STATE OF TEXAS
LYNDON F. SCHMIDT
104123
LICENSED PROFESSIONAL ENGINEER
4-14-10

Documents Prepared By: Lyndon F. Schmidt, P.E.
TEXAS P.E. #104123

RW BUILDING CONSULTANTS, INC.
P.O. Box 230 Valrico FL. 33595
Phone No.: 813.659.9197

TEXAS BOARD OF PROFESSIONAL ENGINEERS
CERTIFICATE OF REGISTRATION # F-11852

PRODUCT: *PLASTPRO FIBERGLASS DOOR*

PART OR ASSEMBLY: *ASTRAGAL & MULTI-POINT LOCK DETAILS*

NO.	DATE	BY
REVISIONS		

DATE: 03/25/10
SCALE: N.T.S.
DWG. BY: AL
CHK. BY: LFS
DRAWING NO.: TX-4061
SHEET 10 OF 11

© 2010 R.W. BUILDING CONSULTANTS INC.

R:\A - Projects\Project Folders\proj 1501 - 1600\PF 1512\D. RWBC Drawings\TEXAS 2010\TX 7-0 FG NL.dwg, 2-10

BILL OF MATERIALS

ITEM	DESCRIPTION	MATERIAL
A	2X HEADER FRAMING SG >= 0.42	WOOD
B	2X FRAMING SG >= 0.42	WOOD
C	1/4" MAX. SHIM SPACE	-
J	#10 X 3" PFH WOOD SCREW	STEEL
K	2X REINFORCEMENT (CLEAR PINE SG >= 0.42)	WOOD
L	#10 X 2-1/2" PFH WOOD SCREW	STEEL
M	#8 X 2-1/2" PFH WOOD SCREW	STEEL
P	1/4" PFH ELCO OR ITW CONCRETE SCREW (1-3/4" MIN. EMB.)	STEEL
Q	3/16" PFH ITW CONCRETE SCREW (1-3/4" MIN. EMB.)	STEEL
3	ASTRAGAL STRIKE PLATE	STEEL
5	#10 X 3" PFH SCREW	STEEL
6	SEALANT	SILICONE
7	WEATHERSTRIP BY Q-LON	FOAM
9	4" HINGE	STEEL
10	#9 X 3/4" PFH WOOD SCREW	STEEL
20	JAMB FINGER - JOINT - PINE (SG >= 0.42)	WOOD
21	POLY FIBER JAMB	POLY FIBER
22	#7 X 2" PFH DRYWALL SCREW	STEEL
29	SIDELITE SPACER	PVC
30	DOOR SWEEP	ALUM.
35	TRIM	WOOD
40	DOOR PANEL - SEE DOOR PANEL DETAIL SHEET FOR CONSTRUCTION DETAILS	-
50	SIDELITE PANEL - SEE SIDELITE PANEL DETAIL SHEET FOR CONSTRUCTION DETAILS	-
61	CONCEALED STIFFENER 6063-T6 BY PLASTPRO	ALUMINUM
62	SLIDE BOLT ROD	STEEL
63	#8 X 2" PPH SMS	STEEL
64	ASTRAGAL 6063-T5 ALUMINUM BY DLP	ALUMINUM
65	MULTI-POINT LOCK ASSEMBLY TRILENNIUM BY W & F	-
66	#10 X 1-1/2" PFH SCREW	STEEL
67	BACKING PLATE	STEEL
69	MULTI-POINT STRIKE PLATE	STEEL
70	INSWING THRESHOLD BY DLP	ALUM. / WOOD
71	ADA THRESHOLD BY DLP	ALUM.
72	OUTSWING THRESHOLD BY DLP	ALUM. / WOOD
73	SIDELITE THRESHOLD BY DLP	ALUM. / WOOD

CONCRETE ANCHOR NOTES:

1. *Substitution of equal concrete anchors from a different supplier may have different edge distance and center distance requirements.*
2. *Concrete anchor locations at the corners may be adjusted to maintain the min. edge distance to mortar joints. If concrete anchor locations noted as "MAX. ON CENTER" must be adjusted to maintain the min. edge distance to mortar joints, additional concrete anchors may be required to ensure the "MAX. ON CENTER" dimensions are not exceeded.*
3. *Concrete anchor table:*

ANCHOR TYPE	ANCHOR SIZE	MIN. EMBEDMENT	MIN. CLEARANCE TO MASONRY EDGE	MIN. CLEARANCE TO ADJACENT ANCHOR
ITW	3/16"	1-3/4"	2-5/8"	2-1/4"
	1/4"	1-3/4"	2-1/2"	3"
ELCO	1/4"	1-3/4"	1"	4"

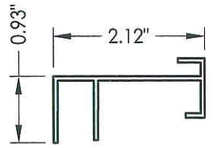

29 SIDELITE SPACER

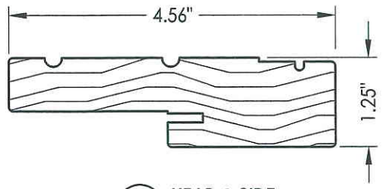

20 HEAD & SIDE
Jamb

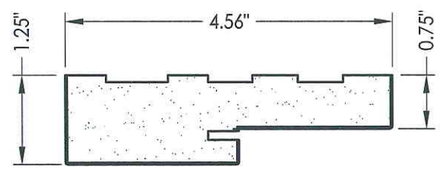

21 HEAD & SIDE
Poly fiber jamb

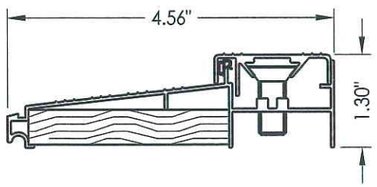

70 INSWING THRESHOLD

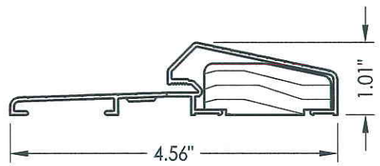

72 OUTSWING THRESHOLD

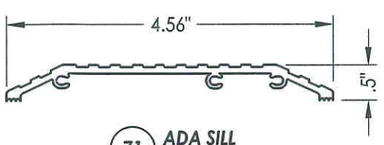

71 ADA SILL

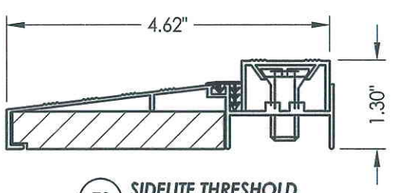

73 SIDELITE THRESHOLD

STATE OF TEXAS
LYNDON F. SCHMIDT
104123
LICENSED PROFESSIONAL ENGINEER

Documents Prepared By: Lyndon F. Schmidt, P.E.
TEXAS P.E. #104123

RW BUILDING CONSULTANTS, INC.
P.O. Box 230 Valrico FL. 33595
Phone No.: 813.659.9197

TEXAS BOARD OF PROFESSIONAL ENGINEERS
CERTIFICATE OF REGISTRATION # F-11852

PRODUCT: PLASTPRO FIBERGLASS DOOR

PART OR ASSEMBLY: BILL OF MATERIALS & COMPONENTS

NO.	DATE	BY
REVISIONS		

DATE: 03/25/10
SCALE: N.T.S.
DWG. BY: AL
CHK. BY: LFS
DRAWING NO.: TX-4061
SHEET 11 OF 11

© 2010 R.W. BUILDING CONSULTANTS INC.

R:\A - Projects\Project Folders\proj 1501 - 1600\PF 1512\D. RWBC Drawings\TEXAS 2010\TX 7-0 FG NI.dwg, 2-11