THIS DRAWING AND ITS CONTENTS ARE CONFIDENTIAL AND ARE NOT TO BE REPRODUCED OR COPIED IN WHOLE OR IN PART OR USED OR DISCLOSED TO OTHERS EXCEPT AS AUTHORIZED BY JELD-WEN INC.

JELD-WEN

JELD-WEN DOOR SYSTEM
DESIGN/SMOOTH PRO-PLUS FULL LITE
12'-4" X 6'-8" OUTSWING/INSWING

GENERAL NOTES

1. THE PRODUCT SHOWN HEREIN IS DESIGNED TO COMPLY WITH THE 2006 EDITIONS OF THE INTERNATIONAL BUILDING CODE (I.B.C.) AND INTERNATIONAL RESIDENTIAL CODE (I.R.C.) WITH THE 2006 TEXAS REVISIONS, EFFECTIVE JANUARY 1, 2008 BASED ON THE SIGNED AND SEALED DATE. PRODUCT HAS BEEN TESTED TO ASTM E330-02, E331-00, E283-04 & AAMA 1304-2. PRODUCT ALSO PASSES WINDZONE (WD) 4 IMPACT RATING FOR SINGLE AND DOUBLE DOOR WITH AND WITHOUT SIDELIGHTS.
2. 2X AND 1X WOOD BUCKS BY OTHERS, MUST BE ANCHORED PROPERLY TO TRANSFER LOADS TO THE STRUCTURE.
3. PRODUCT ANCHORS SHALL BE AS LISTED AND SPACED AS SHOWN ON DETAILS. ANCHOR EMBEDMENT TO BASE MATERIAL SHALL BE BEYOND WALL DRESSING OR STUCCO.
4. DESIGN PRESSURE RATING SEE TABLE I, SHEET 1.
5. TEXAS APPROVED IMPACT RESISTANCE SHUTTERS ARE REQUIRED WHERE RELEVANT.
6. SCALE BASED ON 11x17 SHEET SIZE.
7. ALL 1X & 2X TO BE 0.55 SPECIFIC GRAVITY OR GREATER.
8. WHERE WATER INFILTRATION IS REQUIRED, UNIT SHALL BE INSTALLED AT LOCATION PROTECTED BY OVERHANG SUCH THAT OVERHANG (OH) RATIO = OH LENGTH / OH HEIGHT IS EQUAL TO OR GREATER THAN 1.0.
9. ALL FASTENERS IN WOOD SHALL BE COUNTER SUNK 3/16" DEEP.

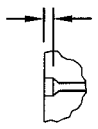

FACE SHEETS: THE FACE SHEETS ARE MADE OF A FIBERGLASS MATERIAL MOLDED TO THE DESIRED DESIGN, AT .065" +/- .015 THICK WITH A DENSITY OF 85 PCF.

CORE DESIGN: THE CORE CONSISTS OF 2 POUND (+/- .25) DENSITY 245FA POLYURETHANE FOAM.

DOOR FRAME CONSTRUCTION: THE HINGE AND LATCH STILES ARE MADE OF PVC CAPPED LAMINATED VENEER LUMBER (LVL). THE STILES ARE MITERED TO ACCEPT THE TOP RAIL, WHICH IS ALSO PVC CAPPED LVL. THE BOTTOM RAIL IS ALSO MADE OF LVL AND CAPPED WITH PVC. TWO STAPLES ARE USED AT EACH CORNER TO HOLD THE FRAME TOGETHER PRIOR TO GLUING THE SKINS ON. A 1.625" X 2.688" LOCKBLOCK IS SECURED TO THE LATCH STILE WITH 2 STAPLES, EVENLY SPACED ALONG ITS LENGTH.

PANEL CONSTRUCTION: THE FIBERGLASS SKINS ARE GLUED TO THE FRAME AND THE CAVITY IS THEN INJECTED WITH THE POLYURETHANE CORE MATERIAL.

SIDELITE CONSTRUCTION: EACH SIDELITE IS CONSTRUCTED THE SAME AS A DOOR PANEL, INCLUDING CORE DESIGN, BUT EXCLUDING THE WOOD LOCK BLOCK. INSULATED GLAZING CONSISTS OF TWO 0.125" TEMPERED GLASS PANES SEPARATED BY A 0.75" AIR SPACE.

DOOR SYSTEM CONSTRUCTION: THE FRAME JAMBS AND HEAD ARE CONSTRUCTED OF WOOD. THE OUTSWING SILL IS COMPRISED OF A COMPOSITE MATERIAL W/ ALUMINUM EXTRUSION. THE INSWING SILL IS COMPRISED OF A COMPOSITE MATERIAL WITH ALUMINUM EXTRUSION AND ADUSTABLE ALUMINUM RISER. TOP CORNERS ARE COPED, BUTTED, AND SEALED USING SILICONE AND FASTENED USING FOUR 16 GA. 7/16" X 2" LONG STAPLES PER CORNER. BOTTOM CORNERS ARE COPED, BUTTED, SEALED USING SILICONE AND FASTENED USING THREE 16 GA. 7/16" X 2" LONG STAPLES . THE VERTICAL MULL POST IS FASTENED THROUGH THE HEAD AND SILL USING THREE #8X2-1/2" SCREWS PER END. AT THE SILL, FOR INSWING PRODUCTS WITH AN ENDURA ASTRAGAL ATTACHED TO THE INACTIVE PANEL, A 5/8" HOLE IS DRILLED IN THE CENTER OF THE SILL THRESHOLD AND FILLED WITH DOW 1199 SILICONE. A PLASTIC RETAINING PLUG IS INSTALLED TO RECIEVE THE ASTRAGAL BOLT. ON OUTSWING PRODUCTS, A 3/8" HOLE IS DRILLED AT THE CENTER OF THE FRAME SILL AND A METAL STRIKE PLATE IS FASTENED USING TWO #8 X 3" SCREWS TO RECEIVE THE BOTTOM ASTRAGAL BOLT. AT THE HEAD ON BOTH INSWING AND OUTSWING PRODUCTS, A 3/8" HOLE IS DRILLED AT THE CENTER OF THE FRAME HEAD AND A METAL STRIKE PLATE IS FASTENED USING TWO #8 X3" SCREWS TO RECEIVE THE TOP ASTRAGAL BOLT. EACH FIXED PANEL IS SECURED TO THE FRAME USING THREE #8 X 2 1/2" PHILLIPS HEAD WOOD SCREWS FASTENED THROUGH THE JAMBS/MULLS AND INTO EACH SIDE OF THE PANEL. ALL MULLION JOINERY AND THE FIXED PANELS / FRAME JOINERY ARE SEALED AT THE EXTERIOR USING DOW 1199 SILICONE. INSULATED GLAZING CONSISTS OF TWO 0.125" TEMPERED GLASS PANES SEPARATED BY A 0.75" AIR SPACE.

MATERIAL PROTECTION

1. ALL LATCH/LOCK AND HINGE HARDWARE TO BE OF CORROSION RESISTANT MATERIAL OR CORROSION RESISTANT COATED.
2. ANCHORING COMPONENTS MUST MEET THE CORROSION RESISTANT STANDARDS AS IDENTIFIED IN THE FBC.

SHEET INDEX

SHEET #	DESCRIPTION
1	GENERAL NOTES
2	OUTSWING DOOR ELEVATIONS
3	OUTSWING DOOR ELEVATIONS
4	OUTSWING HORIZONTAL CROSS SECTIONS
5	OUTSWING HORIZONTAL CROSS SECTION DETAILS
6	PARTS LIST & OUTSWING VERTICAL CROSS SECTIONS
7	INSWING DOOR ELEVATIONS
8	INSWING DOOR ELEVATIONS
9	INSWING HORIZONTAL CROSS SECTIONS
10	INSWING HORIZONTAL CROSS SECTION DETAILS
11	INSWING VERTICAL CROSS SECTIONS & COMPONENT DRAWINGS
12	ALTERNATE ANCHORING METHODS
13	INSWING & OUTSWING ANCHORING DETAILS
14	INSWING & OUTSWING ANCHORING DETAILS
15	INSWING & OUTSWING FRAME CORNER CONSTRUCTIONS
16	HINGE ROUTE, ASTRAGAL, & LATCH STRIKE PLATE LOCATIONS

TABLE 1

DESIGN PRESSURE RATING

		DESIGN PRESSURE RATINGS:	
		SINGLE DOOR ONLY	SINGLE DOOR W/ SIDELITES & DBL DOOR W/ OR W/O SIDLITES
INSWING	POSITIVE	+ 66	+ 55
	NEGATIVE	- 66	- 55
OUTSWING	POSITIVE	+ 60	+ 55
	NEGATIVE	- 60	- 55

JELD-WEN, inc.
Research and Development
3737 Lakeport Blvd.
Klamath Falls, Oregon 97601
Ph. (541) 882-3451
Fax (541) 850-2609

PRODUCT: DESIGN/SMOOTH PRO-PLUS FULL LITE DOOR 12-4 X 6-8

PART OR ASSEMBLY: GENERAL NOTES

NO.	DATE	BY	REVISIONS

Kristina S. Daugherty
CertWorks LLC
Texas P.E. No. 104390
127 W. Fairbanks Ave. Ste. 438
Winter Park, FL 32789

DATE: 01/11/2010
SCALE: NO SCALE
DWG. BY: G.LUBBECKE
CHK. BY: S. FREY
DRAWING NO.: JW012010
SHEET 1 OF 16

THIS DRAWING AND ITS CONTENTS ARE CONFIDENTIAL AND ARE NOT TO BE REPRODUCED OR COPIED IN WHOLE OR IN PART OR USED OR DISCLOSED TO OTHERS EXCEPT AS AUTHORIZED BY JELD-WEN INC.

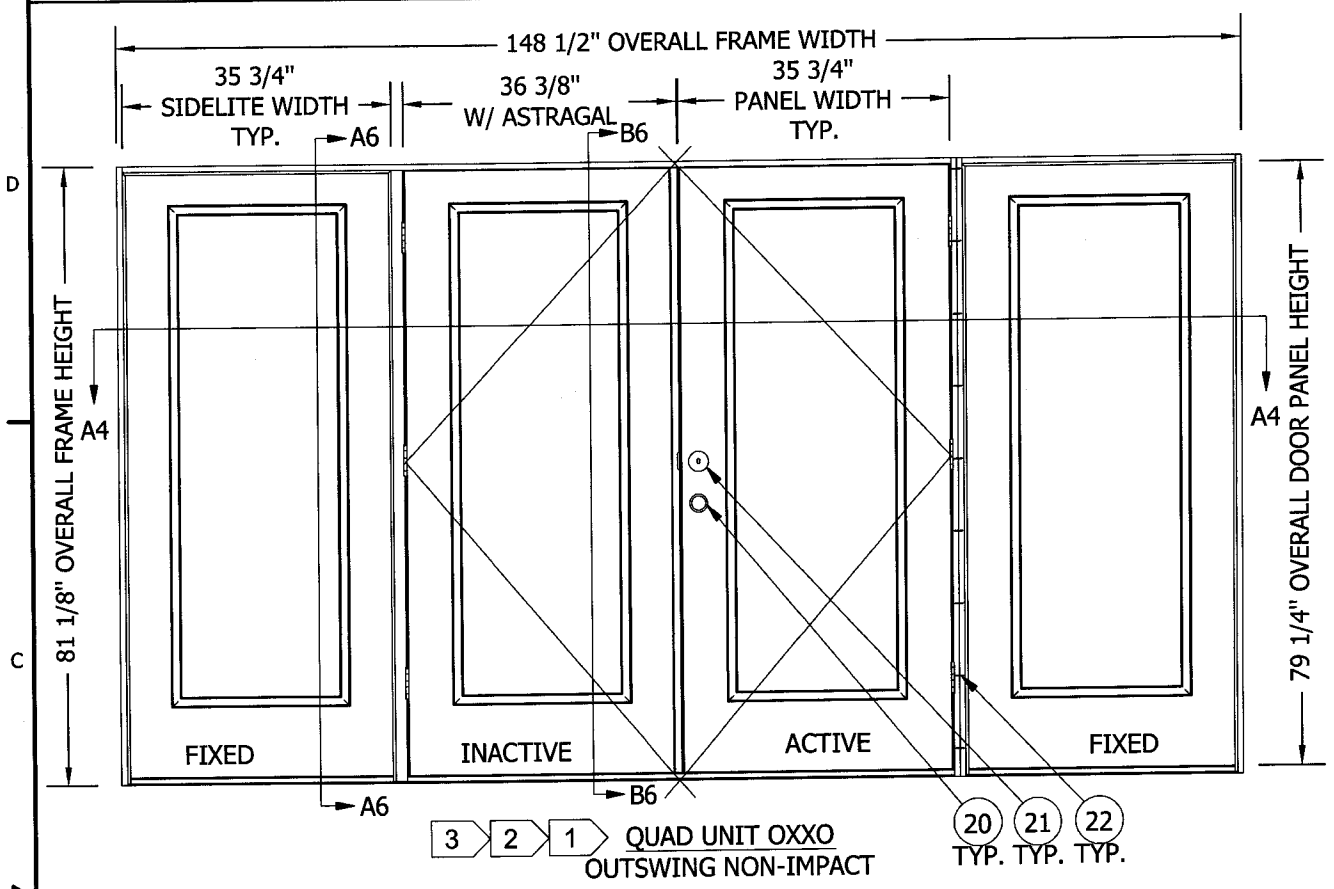

3 2 1 QUAD UNIT OXXO
OUTSWING NON-IMPACT

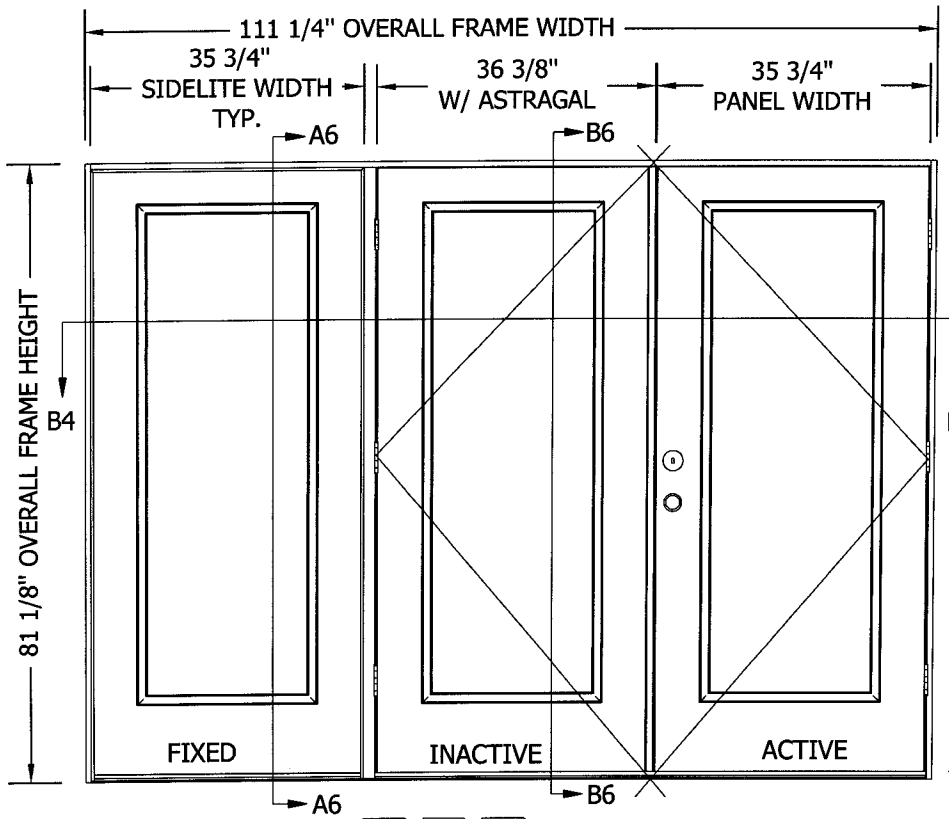

3 2 1 TRI UNIT (OXX) OR (XXO)
OUTSWING NON-IMPACT

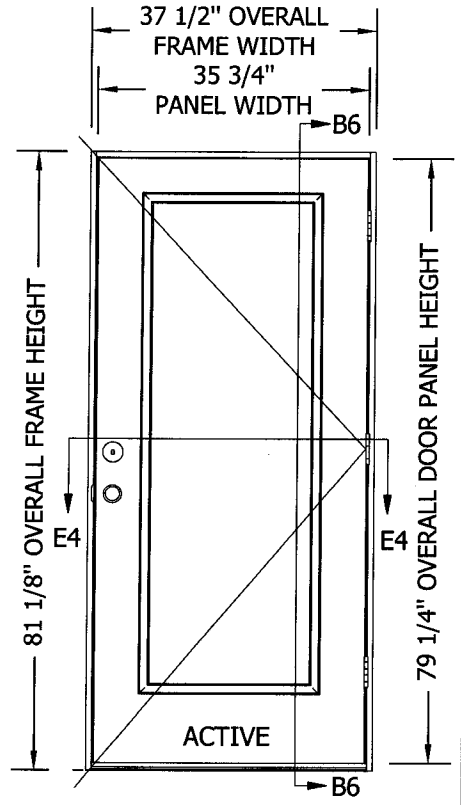

2 1 SINGLE UNIT X
OUTSWING NON-IMPACT

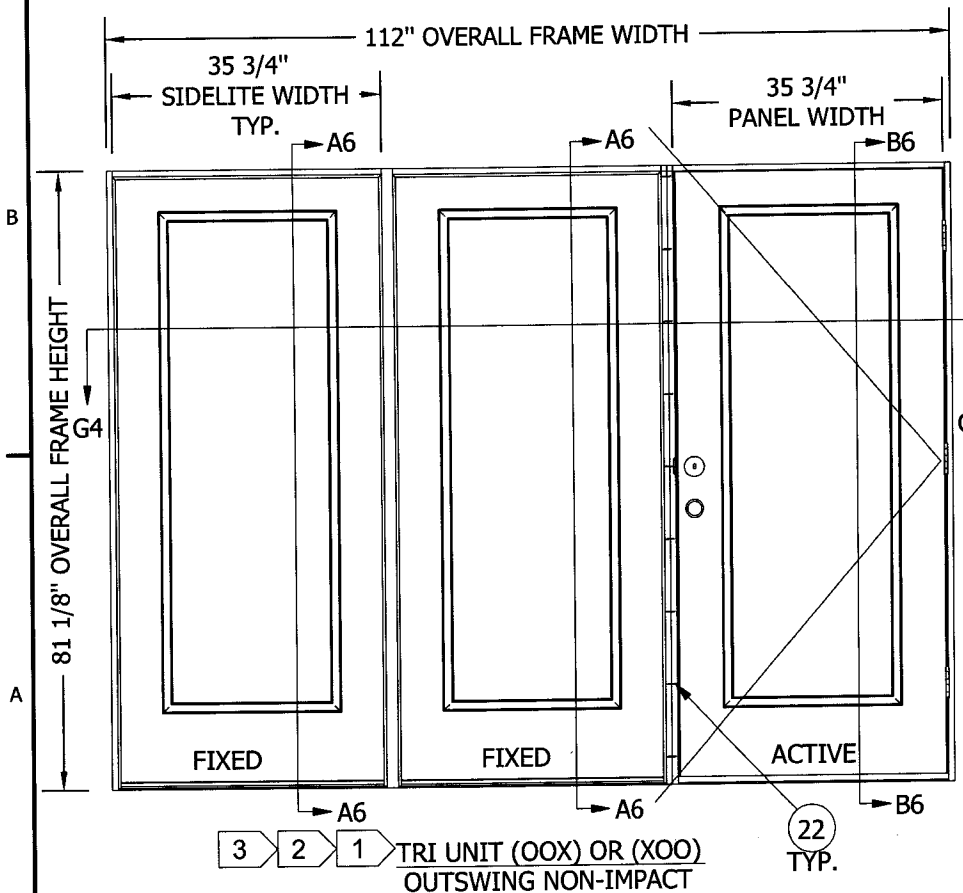

3 2 1 TRI UNIT (OOX) OR (XOO)
OUTSWING NON-IMPACT

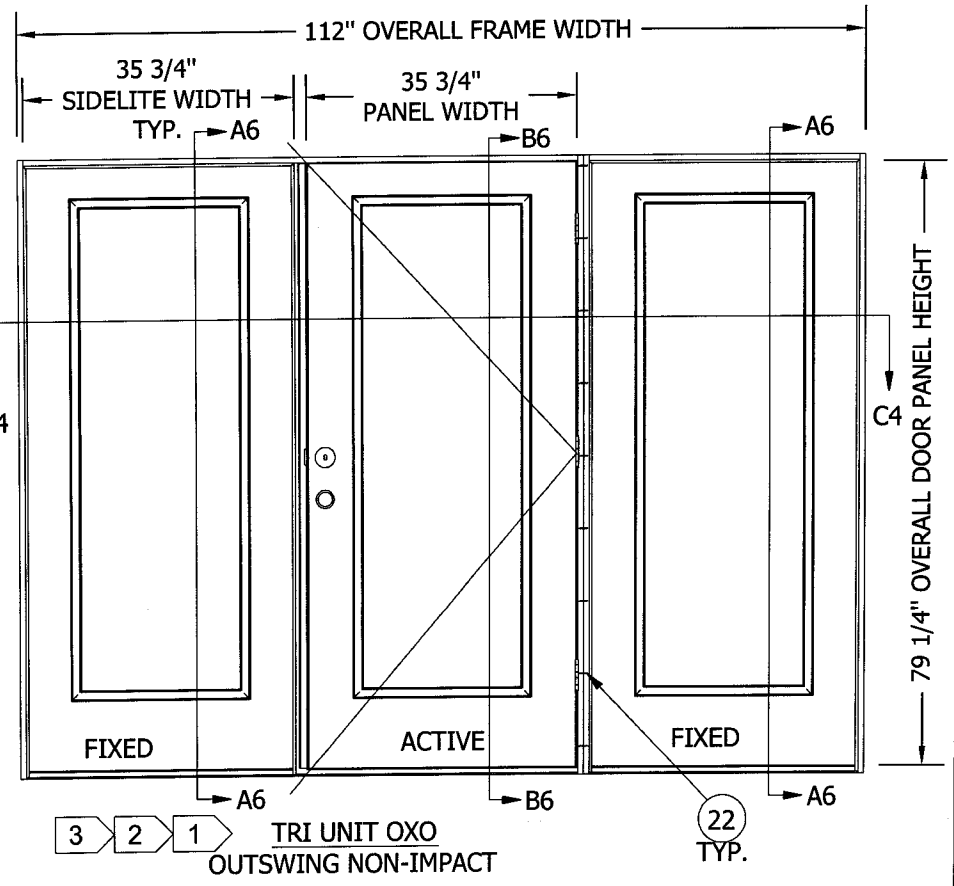

3 2 1 TRI UNIT OXO
OUTSWING NON-IMPACT

NOTES:

1. ALL OUTSWING VIEWS ARE FROM EXTERIOR.
2. SEE SHEET 12 FOR ALTERNATE BUCK/SUBSTRATE INSTALLATIONS.
3. MULL POST & DOUBLE BACK JAMBS ARE INTERCHANGEABLE.

JELD-WEN, inc.
Research and Development
3737 Lakeport Blvd.
Klamath Falls, Oregon 97601
Ph. (541) 882-3451
Fax (541) 850-2609

PRODUCT: DESIGN/SMOOTH PRO-PLUS FULL LITE DOOR
PART OR ASSEMBLY: 12-4 X 6-8

OUTSWING DOOR ELEVATIONS

NO.	DATE	BY	REVISIONS

Kristina S. Daugherty
CertWorks LLC.
Texas P.E. No. 104390
127 W. Fairbanks Ave. Ste. 438
Winter Park, FL 32789

DATE: 01/11/2010
SCALE: 1/2"=1'-0"
DWG. BY: G.LUBBECKE
CHK. BY: S. FREY
DRAWING NO.: JW012010
SHEET 2 OF 16

THIS DRAWING AND ITS CONTENTS ARE CONFIDENTIAL AND ARE NOT TO BE REPRODUCED OR COPIED IN WHOLE OR IN PART OR USED OR DISCLOSED TO OTHERS EXCEPT AS AUTHORIZED BY JELD-WEN INC.

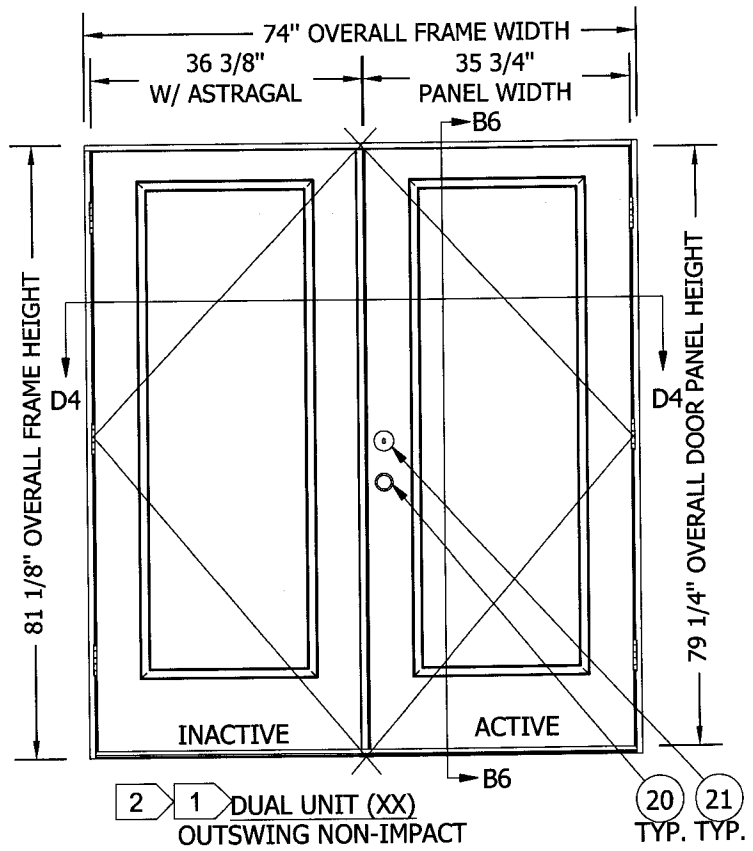

2 1 DUAL UNIT (XX)
OUTSWING NON-IMPACT

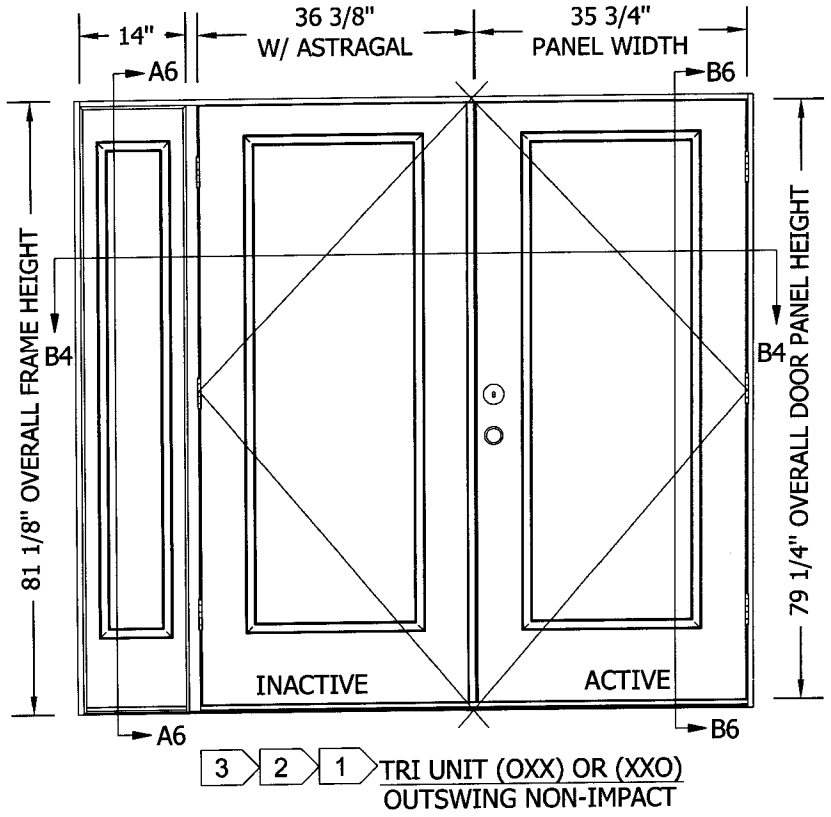

3 2 1 TRI UNIT (OXX) OR (XXO)
OUTSWING NON-IMPACT

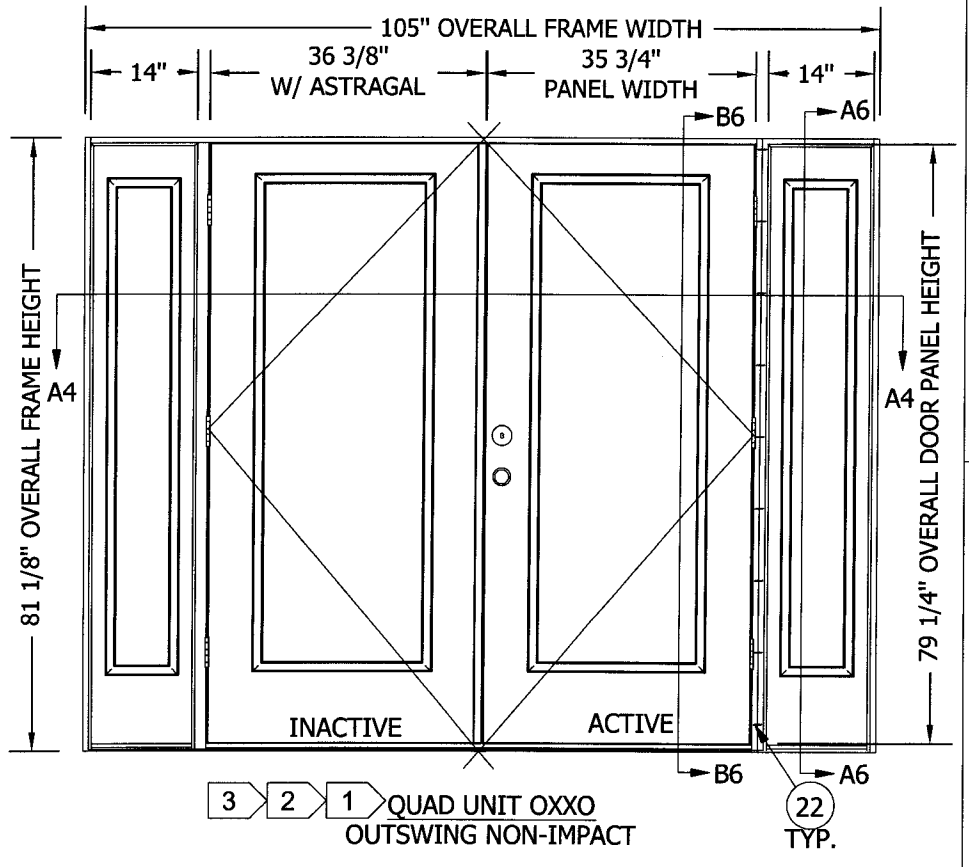

3 2 1 QUAD UNIT OXXO
OUTSWING NON-IMPACT

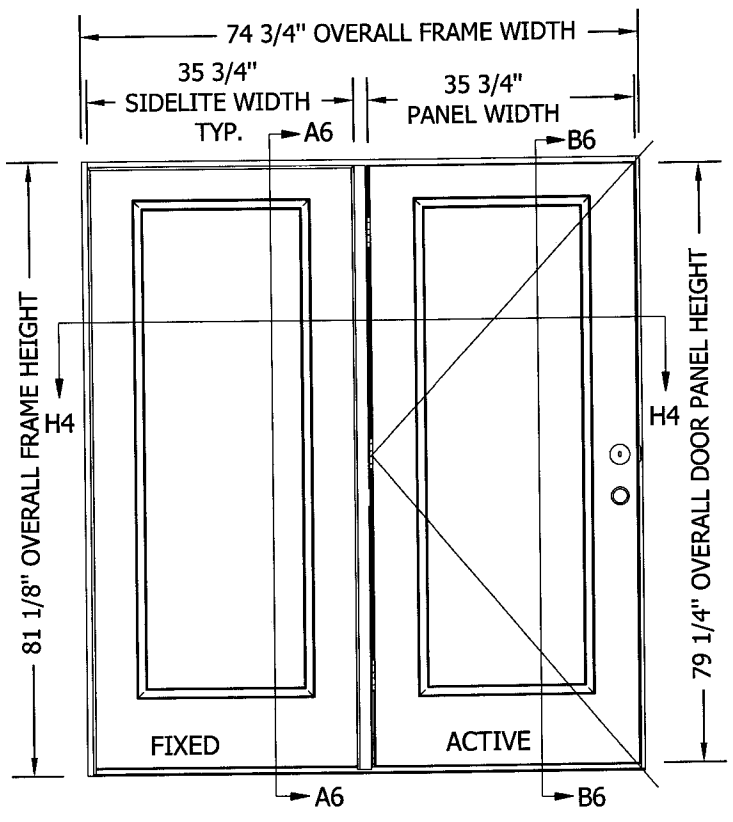

3 2 1 DUAL UNIT (OX) OR (XO)
OUTSWING NON-IMPACT

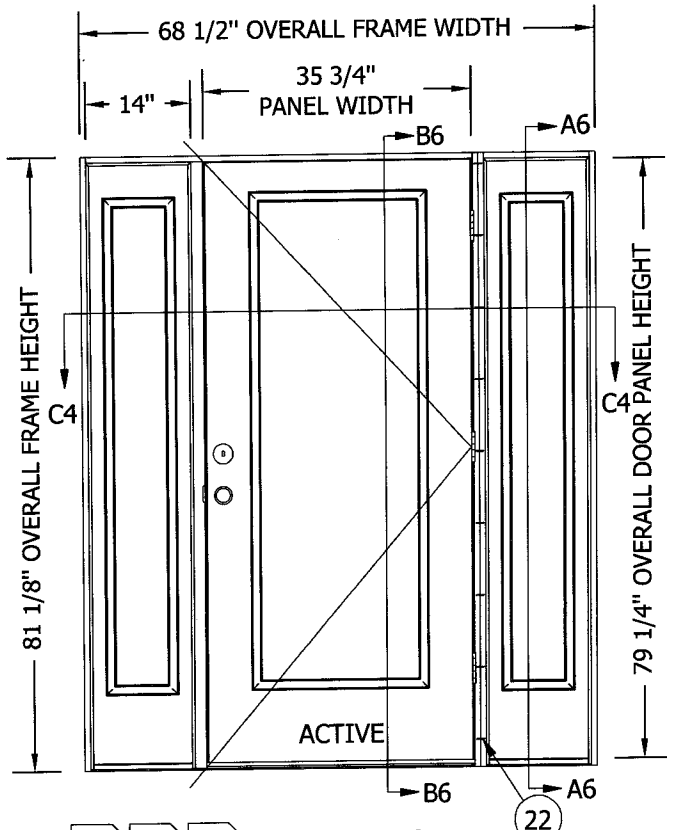

3 2 1 TRI UNIT OXO
OUTSWING NON-IMPACT

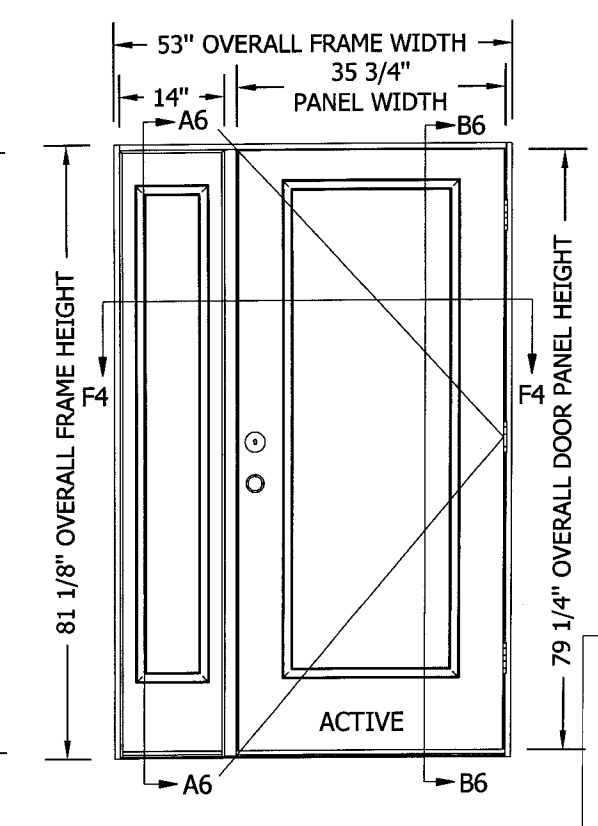

3 2 1 DUAL UNIT (OX) OR (XO)
OUTSWING NON-IMPACT

NOTES:

1. ALL OUTSWING VIEWS ARE FROM EXTERIOR.
2. SEE SHEET 12 FOR ALTERNATE BUCK/SUBSTRATE INSTALLATIONS.
3. MULL POST & DOUBLE BACK JAMBS ARE INTERCHANGEABLE.

2-26-10
Kristina S. Daugherty
CertWorks LLC.
Texas P.E. No. 104390
127 W. Fairbanks Ave. Ste. 438
Winter Park, FL 32789

JELD-WEN, inc.
Research and Development
3737 Lakeport Blvd.
Klamath Falls, Oregon 97601
Ph. (541) 882-3451
Fax (541) 850-2609

PRODUCT: DESIGN/SMOOTH PRO-PLUS FULL LITE DOOR
12-4 X 6-8

PART OR ASSEMBLY: OUTSWING DOOR ELEVATIONS

NO.	DATE	REVISIONS	BY

DATE: 01/11/2010
SCALE: NO SCALE
DWG. BY: G.LUBBECKE
CHK. BY: S. FREY
DRAWING NO.: JW012010
SHEET 3 OF 16

THIS DRAWING AND ITS CONTENTS ARE CONFIDENTIAL AND ARE NOT TO BE REPRODUCED OR COPIED IN WHOLE OR IN PART OR USED OR DISCLOSED TO OTHERS EXCEPT AS AUTHORIZED BY JELD-WEN INC.

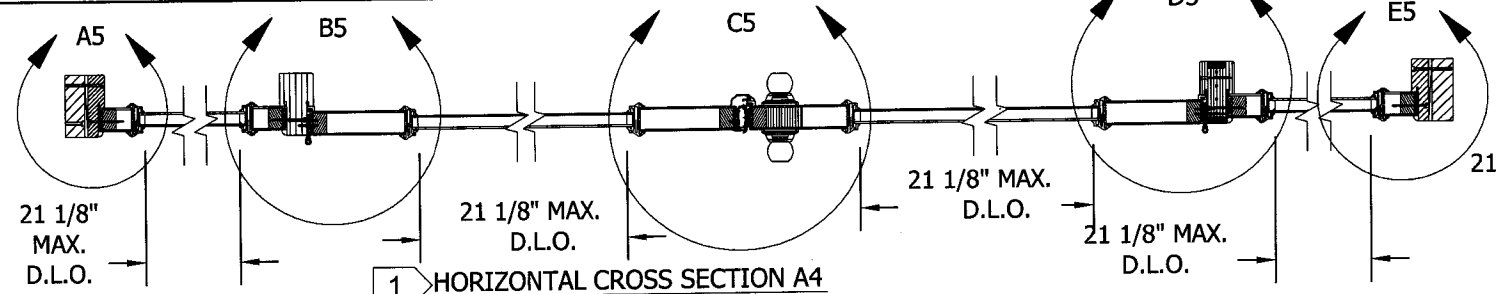

1 HORIZONTAL CROSS SECTION A4
OUTSWING
WOOD 2X INSTALLATION SHOWN

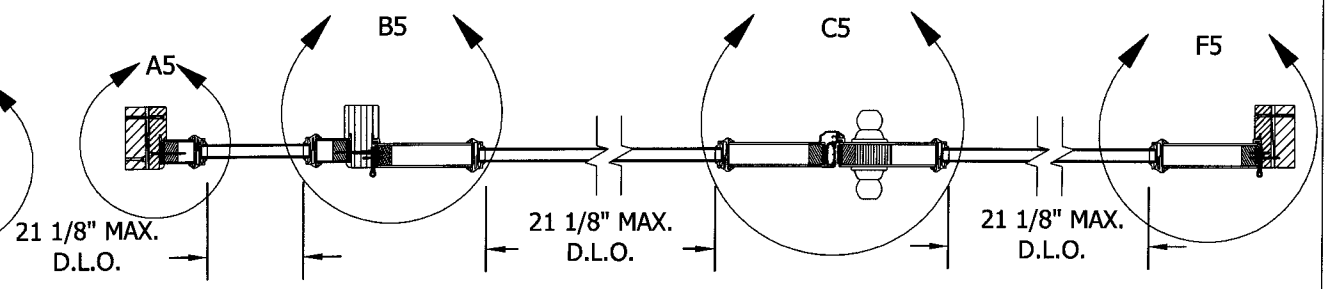

1 HORIZONTAL CROSS SECTION B4
OUTSWING
WOOD 2X INSTALLATION SHOWN

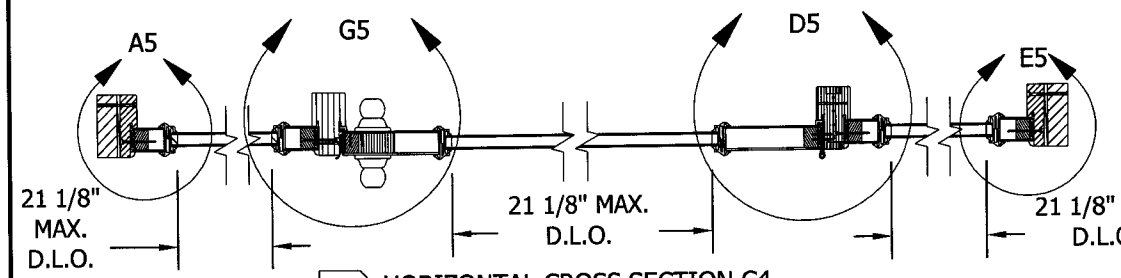

1 HORIZONTAL CROSS SECTION C4
OUTSWING
WOOD 2X INSTALLATION SHOWN

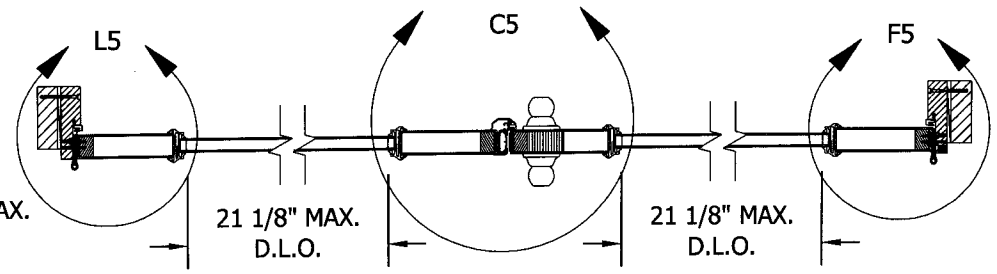

HORIZONTAL CROSS SECTION D4
OUTSWING
WOOD 2X INSTALLATION SHOWN

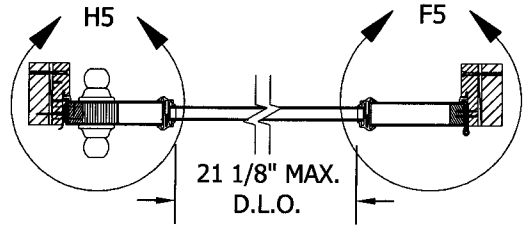

HORIZONTAL CROSS SECTION E4
OUTSWING
WOOD 2X INSTALLATION SHOWN

↓ INTERIOR VIEW ↓

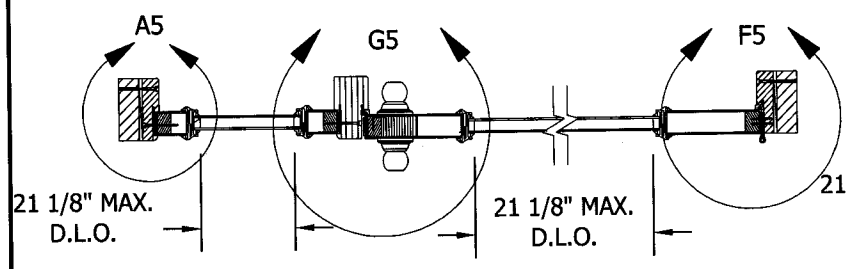

1 HORIZONTAL CROSS SECTION F4
OUTSWING
WOOD 2X INSTALLATION SHOWN

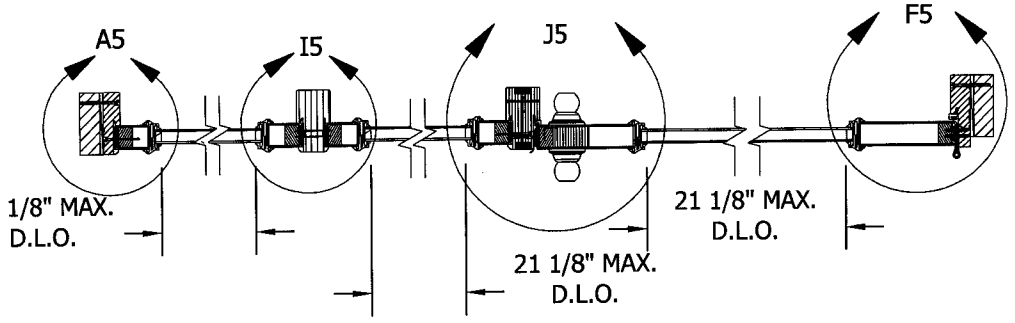

1 HORIZONTAL CROSS SECTION G4
OUTSWING
WOOD 2X INSTALLATION SHOWN

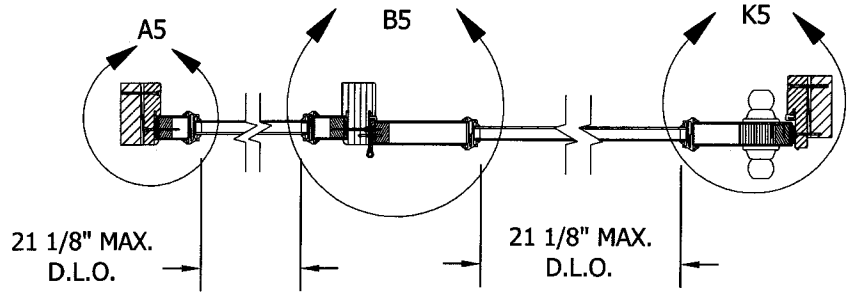

1 HORIZONTAL CROSS SECTION H4
OUTSWING
WOOD 2X INSTALLATION SHOWN

NOTES:

1 MULL POST & DOUBLE BACK JAMBS ARE INTERCHANGEABLE.

JELD-WEN, inc.
Research and Development
3737 Lakeport Blvd.
Klamath Falls, Oregon 97601
Ph. (541) 882-3451
Fax (541) 850-2609

PRODUCT: DESIGN/SMOOTH PRO-PLUS FULL LITE DOOR
PART OR ASSEMBLY: OUTSWING HORIZONTAL CROSS SECTIONS
12-4 X 6-8

NO.	DATE	BY	REVISIONS

2-26-10
Kristina S. Daugherty
CertWorks LLC.
Texas P.E. No. 104390
127 W. Fairbanks Ave. Ste. 438
Winter Park, FL 32789

DATE: 01/11/2010
SCALE: NO SCALE
DWG. BY: G.LUBBECKE
CHK. BY: S. FREY
DRAWING NO.: JW012010
SHEET 4 OF 16

THIS DRAWING AND ITS CONTENTS ARE CONFIDENTIAL AND ARE NOT TO BE REPRODUCED OR COPIED IN WHOLE OR IN PART OR USED OR DISCLOSED TO OTHERS EXCEPT AS AUTHORIZED BY JELD-WEN INC.

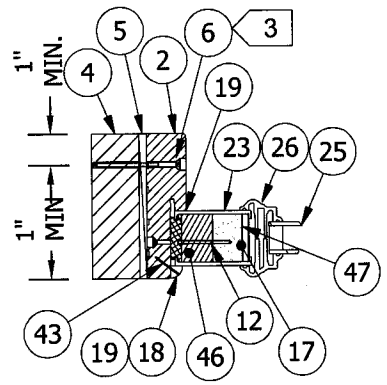

DETAIL A5
2 SIDELITE AT SIDE JAMB

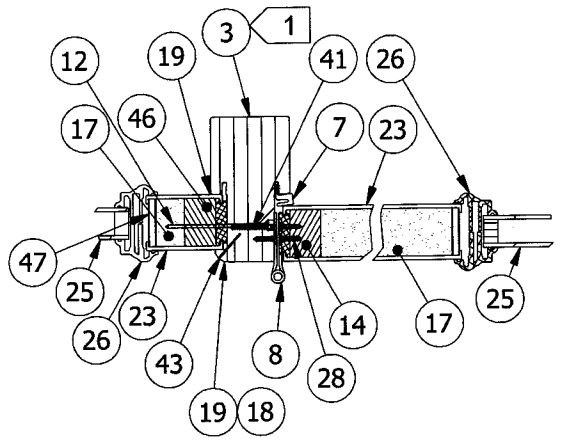

DETAIL B5
SIDELITE/HINGE STILE
AT MULL POST

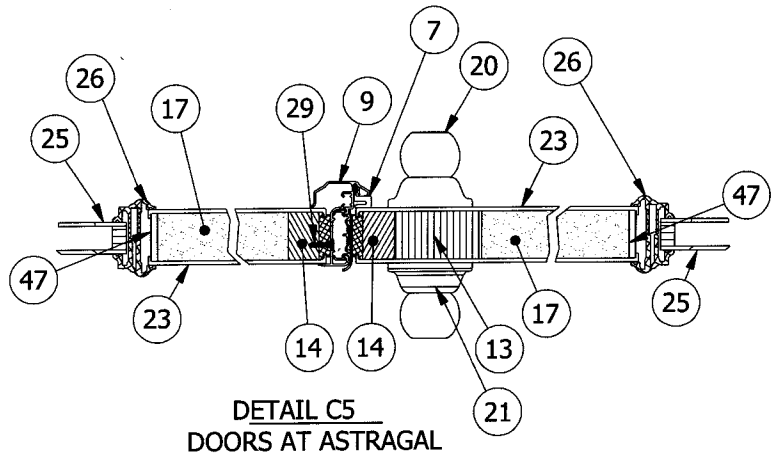

DETAIL C5
DOORS AT ASTRAGAL

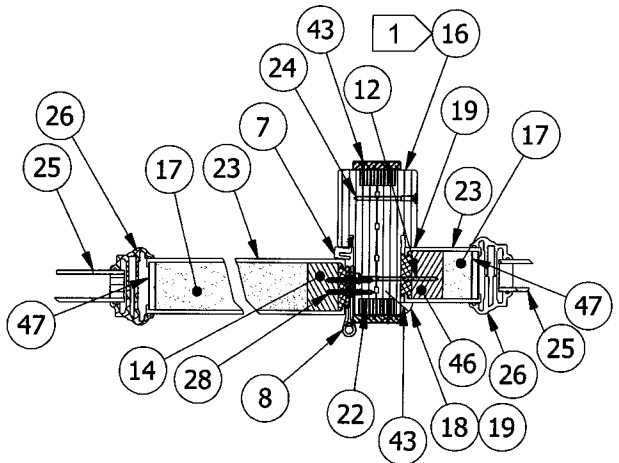

5 DETAIL D5
HINGE STILE/SIDELITE
AT DOUBLE BACK JAMB

INTERIOR VIEW

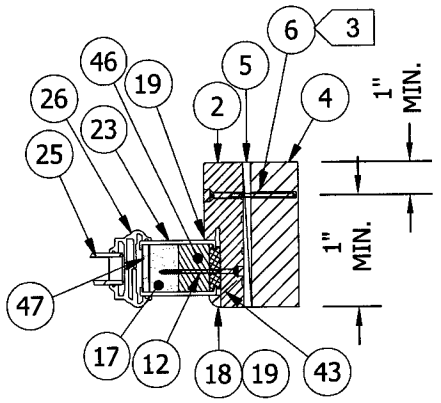

2 DETAIL E5
SIDELITE AT SIDE JAMB

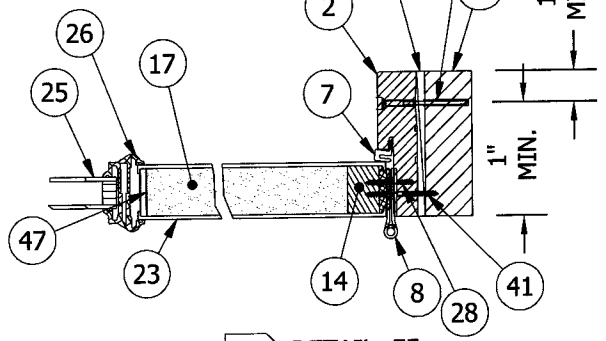

2 DETAIL F5
HINGE STILE AT
SIDE JAMB

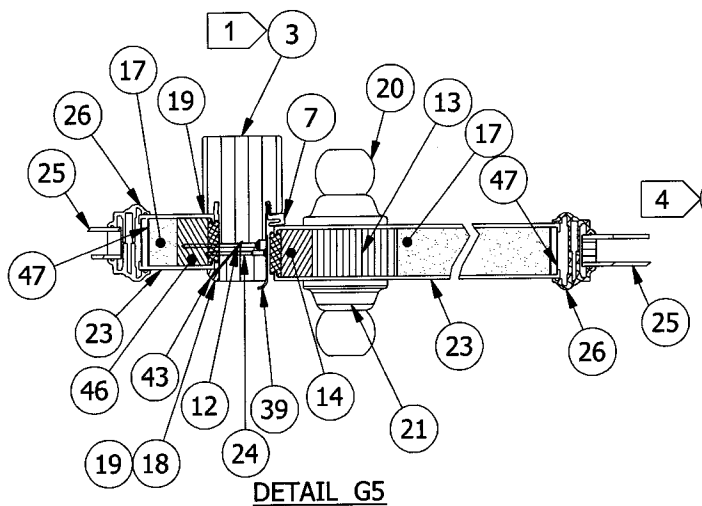

DETAIL G5
SIDELITE/LATCH STILE
AT MULL POST

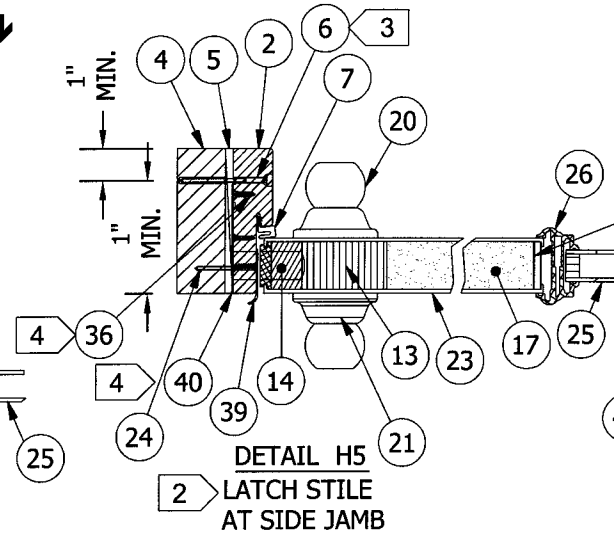

DETAIL H5
2 LATCH STILE
AT SIDE JAMB

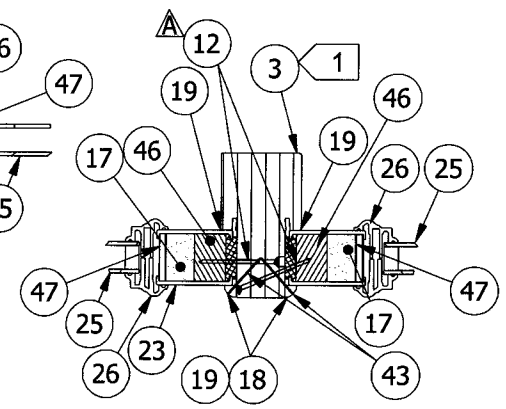

DETAIL I5
SIDELITES
AT MULL POST

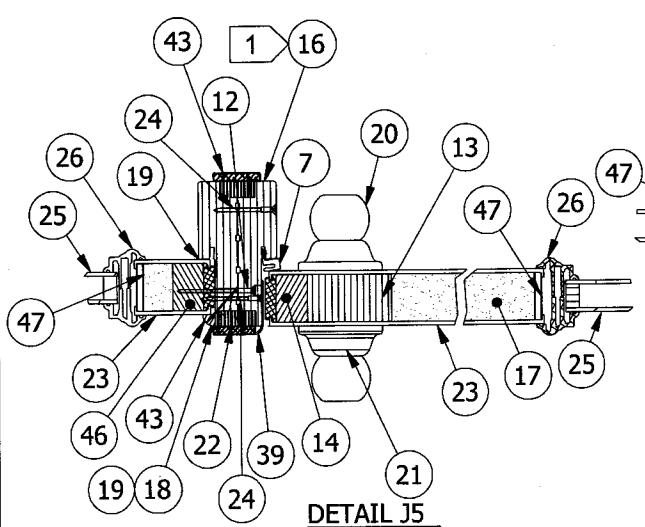

5 DETAIL J5
SIDELITE/LATCH STILE
AT DOUBLE BACK JAMB

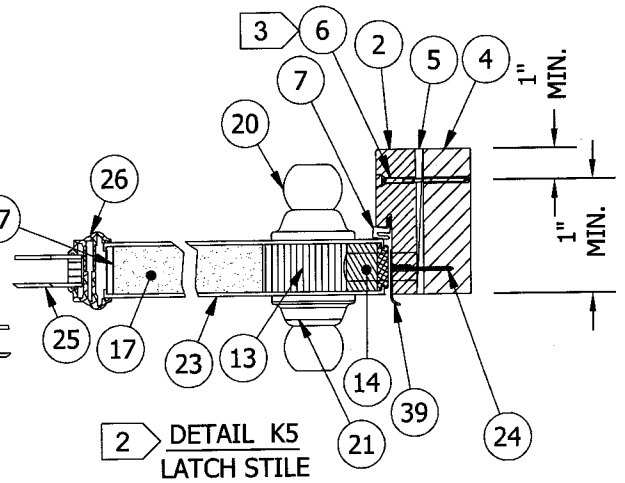

2 DETAIL K5
LATCH STILE
AT SIDE JAMB

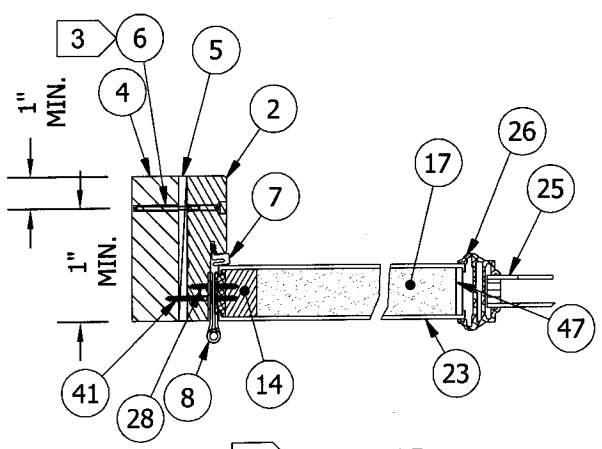

2 DETAIL L5
HINGE STILE AT
SIDE JAMB

NOTES:

1. MULL POST & DOUBLE BACK JAMBS ARE INTERCHANGEABLE.
2. SEE SHEET 12 FOR ALTERNATE BUCK/SUBSTRATE INSTALLATIONS.
3. MIN FASTENER EMBEDMENT INTO WOOD IS 1-1/2".
4. ITEMS #36 & #40 ONLY USED ON SINGLE OPERATING UNITS.
5. CORRUGATED NAILS (ITEM #22) ON BOTH EXT. & INT. OF MULL.

JELD-WEN, inc.
Research and Development
3737 Lakeport Blvd.
Klamath Falls, Oregon 97601
Ph. (541) 882-3451
Fax (541) 850-2609

PRODUCT: DESIGN/SMOOTH PRO-PLUS FULL LITE DOOR
PART OR ASSEMBLY: OUTSWING HORIZONTAL CROSS SECTION DETAILS
12-4 X 6-8

NO.	DATE	BY	REVISIONS
A	02/03/2010	GL	ADDED FASTENERS

DATE: 01/11/2010
SCALE: NO SCALE
DWG. BY: G.LUBBECKE
CHK. BY: S. FREY
DRAWING NO.: JW012010
SHEET 5 OF 16

Kristina S. Daugherty
CertWorks LLC.
Texas P.E. No. 104390
127 W. Fairbanks Ave. Ste. 438
Winter Park, FL 32789

THIS DRAWING AND ITS CONTENTS ARE CONFIDENTIAL AND ARE NOT TO BE REPRODUCED OR COPIED IN WHOLE OR IN PART OR USED OR DISCLOSED TO OTHERS EXCEPT AS AUTHORIZED BY JELD-WEN INC.

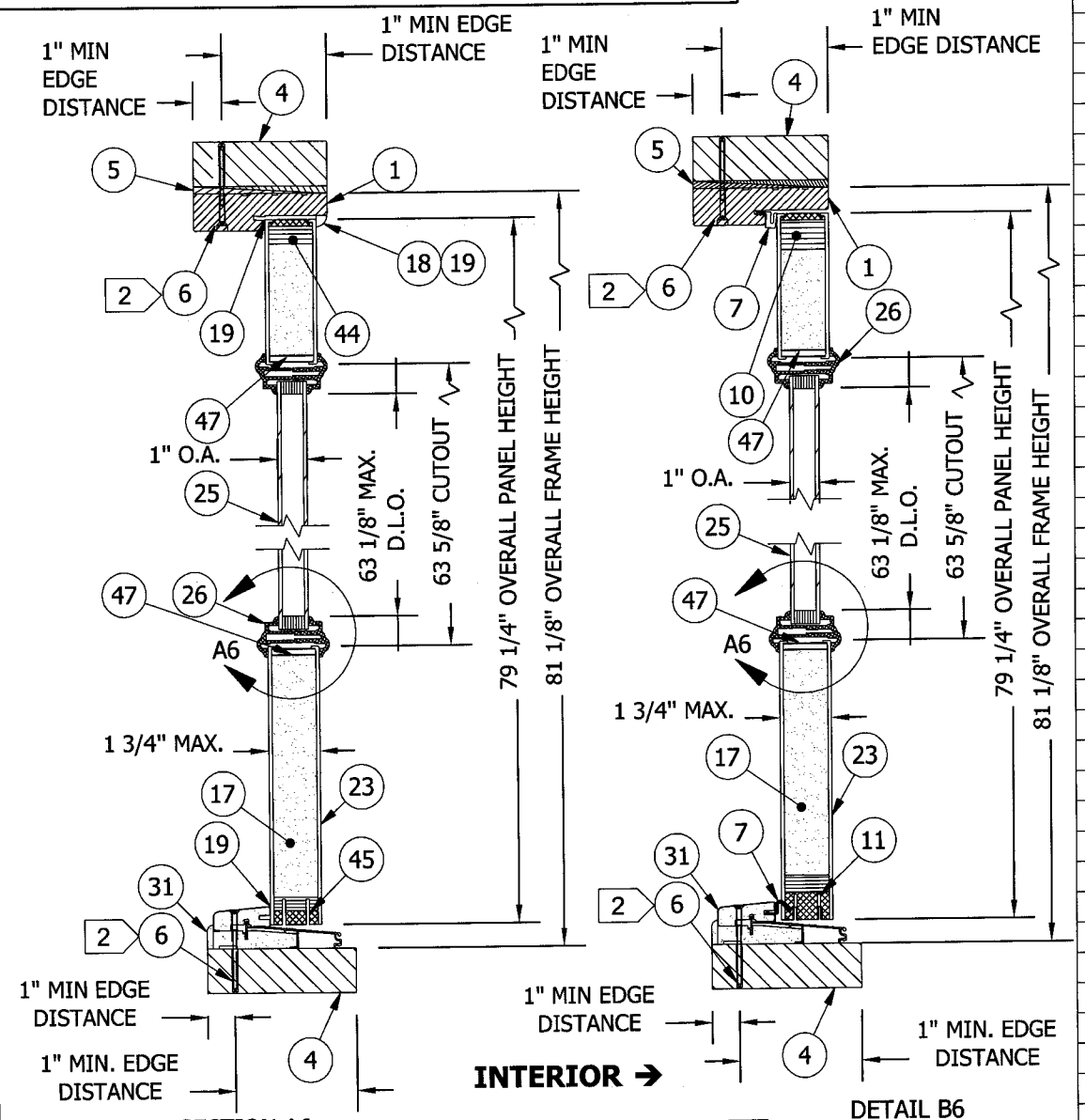

SECTION A6
1 VERTICAL CROSS SECTION OF OUTSWING SIDELITE 2X WOOD BUCK SHOWN

DETAIL B6
1 OUTSWING VERTICAL CROSS SECTION OF DOOR 2X WOOD BUCK SHOWN

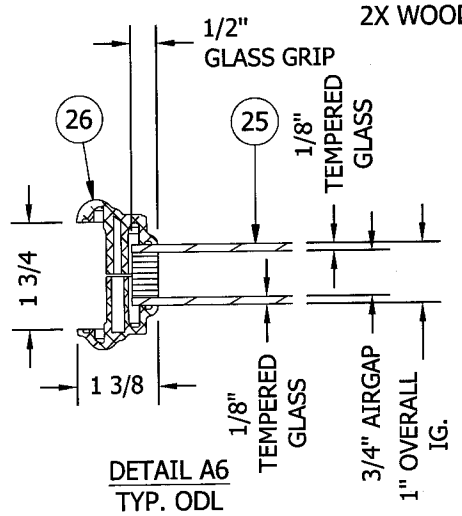

DETAIL A6
TYP. ODL FRAME AND GLASS

PARTS LIST FOR INSWING & OUTSWING DOOR SYSTEMS

ITEM	DESCRIPTION	MATERIAL
1	HEAD JAMB (1 1/4" X 4 5/8" FINGERJOINTED PINE)	WOOD
2	SIDE JAMB (1 1/4" X 4 5/8" FINGERJOINTED PINE)	WOOD
3	MULL POST (2 1/2" X 4-9/16" LAMINATED VENEER LUMBER)	LVL
4	2X WOOD BUCK (GRADE 2 SOUTHERN YELLOW PINE)	WOOD
5	NON-COMPRESSION SHIM - 1/4" MAX	WOOD
6	#10 PHILLIPS HEAD WOOD SCREW WITH MIN 1-1/2" EMBEDMENT	STEEL
7	COMPRESSION WEATHERSTRIP (SCHLEGEL QEBD-650)	VINYL
8	4 X 4 BUTT HINGE 12 GA (.098)	STEEL
9	ENDURA ULTIMATE HURRICANE ASTRAGAL	6063-T6 ALUMINUM
10	TOP RAIL (1-5/8" x 1-1/16" LVL CAPPED W/ 1-5/8" X 1/4" PVC)	WOOD/PVC
11	BOTTOM RAIL (1-5/8" X 5/8" LVL CAPPED WITH 1-5/8" X 1" PVC)	WOOD/PVC
12	#8 X 2-1/2" PHILLIPS HEAD WOOD SCREW	STEEL
13	LOCK BLOCK (1.625" X 2.688" X 11.875")	WOOD
14	LATCH/HINGE STILE (1-5/8" X 1-1/16" LVL CAPPED WITH 1-5/8" X 3/8" PVC)	WOOD/PVC
15	CROWN STAPLE, 7/16" X 2" X 16GA.	STEEL
16	DOUBLE BACK JAMB, LAMINATED VENEER LUMBER (LVL)	LAMINATED VENEER LUMBER(LVL)
17	POLYURETHANE FOAM (2.0 pcf)	FOAM
18	QUARTER ROUND SCOTIA	WOOD
19	SILICONE 1199 DOW	SILICONE
20	KWIKSET LOCK, SERIES 400	STEEL
21	KWIKSET DEADBOLT, SERIES 660	STEEL
22	CORRUGATED NAILS, 1/2" X 1-1/16"	STEEL
23	FIBERGLASS DOOR SKIN, .065" THICK	FIBERGLASS
24	#8 X 2 PHILLIPS HEAD WOOD SCREW	STEEL
25	1" INSULATED TEMPERED GLASS	GLASS
26	ODL LIP LITE FRAME	PLASTIC
27	3/16" TAPCON SCREW WITH MIN 1-1/4" EMBEDMENT	STEEL
28	#9 X 3/4" PHILLIPS HEAD WOOD SCREW	STEEL
29	#8 X 1" FLAT HEAD WOOD SCREW	STEEL
30	DOOR SWEEP	VINYL
31	AFCO MODEL 12/5 J-2297 WGC OUTSWING SILL	ALUMINUM/COMPOSITE PLASTIC
32	ENDURA MODEL ZAIL56MWF120DSNC INSWING SILL	ALUMINUM/COMPOSITE PLASTIC
33	SIDELITE/FIXED PANEL SEAT Z60 SERIES (ENDURA)	EXTRUDED VINYL
34	1X WOOD BUCK (GRADE 2 SOUTHERN YELLOW PINE)	WOOD
35	TOP/BOTTOM ASTRAGAL STRIKE PLATE (EXCEPT INSWING BOTTOM)	STEEL
36	#8 X 3/4 PHILLIPS HEAD WOOD SCREW	STEEL
37	BOTTOM ASTRAGAL INSERT PLUG (INSWING ONLY)	PLASTIC
38	DEADBOLT STRIKE PLATE	STEEL
39	LATCH STRIKE PLATE	STEEL
40	DEAD BOLT BACK UP PLATE (SINGLE DOOR SYSTEMS ONLY)	STEEL
41	#10 X 1-1/2" PHILLIPS HEAD WOOD SCREW	STEEL
42	#8 X 3" PHILLIPS HEAD WOOD SCREW	STEEL
43	1 1/4" BRAD 18GA.	STEEL
44	SIDELITE TOP RAIL (1-5/8" x 1/2" LVL CAPPED W/ 1-5/8" X 1/4" PVC)	WOOD/PVC
45	SIDELITE BOTTOM RAIL (1-5/8" 1/2" LVL CAPPED WITH 1-5/8" X 1/2" PVC)	WOOD/PVC
46	SIDELITE LATCH/HINGE STILE (1-5/8" X 3/4" LVL CAPPED WITH 1-5/8" X 1/4" PVC)	WOOD/PVC
47	CORRUGATED COMPOSITE INSERT	COMPOSITE

NOTES:

1 SEE SHEET 12 FOR ALTERNATE BUCK/SUBSTRATE INSTALLATIONS.

2 MIN. FASTENER EMBEDMENT INTO WOOD IS 1-1/2".

JELD-WEN, inc.
Research and Development
3737 Lakeport Blvd.
Klamath Falls, Oregon 97601
Ph. (541) 882-3451
Fax (541) 850-2609

PRODUCT: DESIGN/SMOOTH PRO-PLUS FULL LITE DOOR
PART OR ASSEMBLY: 12-4 X 6-8
PARTS LIST & OUTSWING VERTICAL CROSS SECTIONS

NO.	DATE	REVISIONS	BY

Kristina S. Daugherty
CertWorks LLC.
Texas P.E. No. 104390
127 W. Fairbanks Ave. Ste. 438
Winter Park, FL 32789

DATE: 01/11/2010
SCALE: NO SCALE
DWG. BY: G.LUBBECKE
CHK. BY: S. FREY
DRAWING NO.: JW012010
SHEET 6 OF 16

THIS DRAWING AND ITS CONTENTS ARE CONFIDENTIAL AND ARE NOT TO BE REPRODUCED OR COPIED IN WHOLE OR IN PART OR USED OR DISCLOSED TO OTHERS EXCEPT AS AUTHORIZED BY JELD-WEN INC.

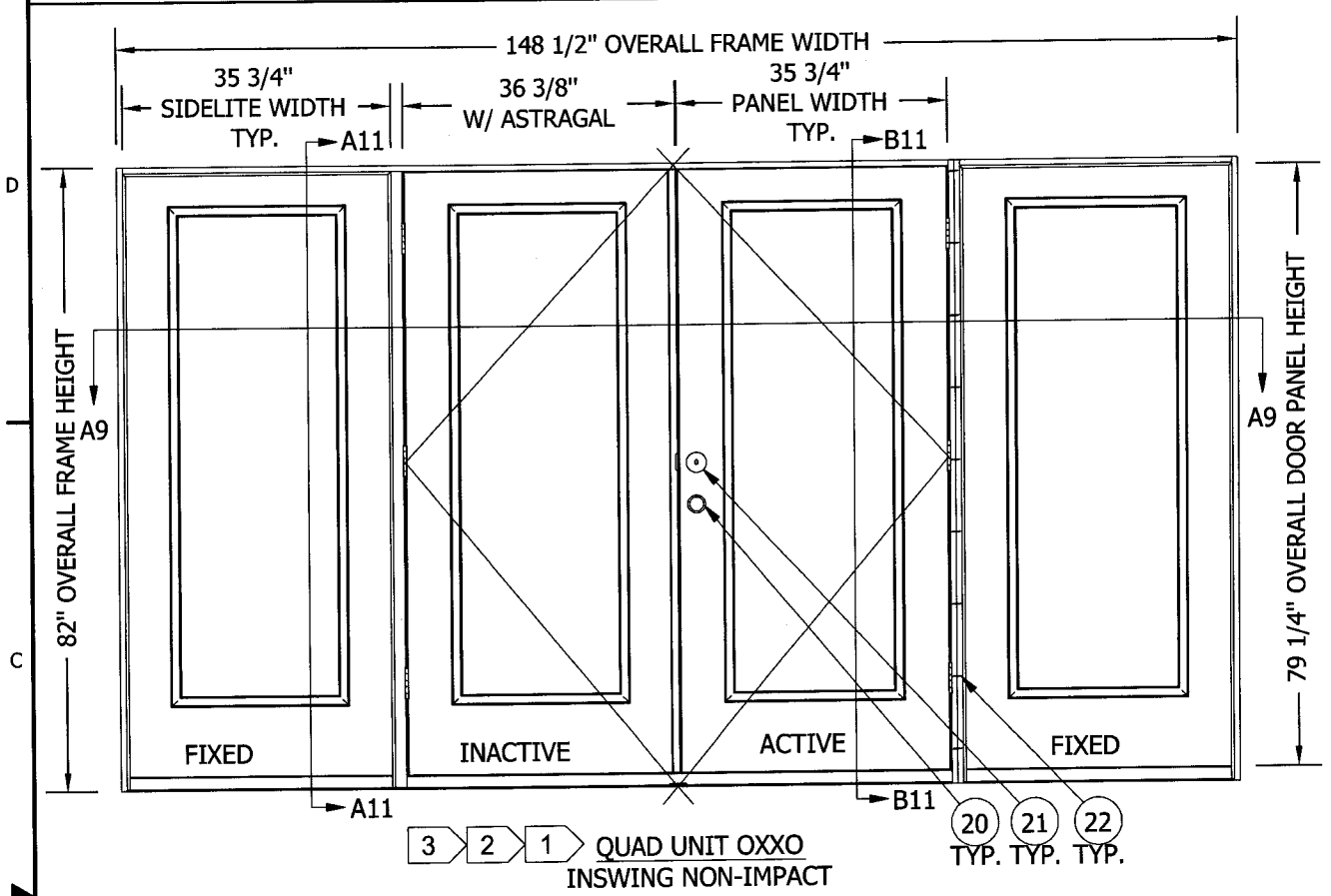

3 2 1 QUAD UNIT OXXO
INSWING NON-IMPACT

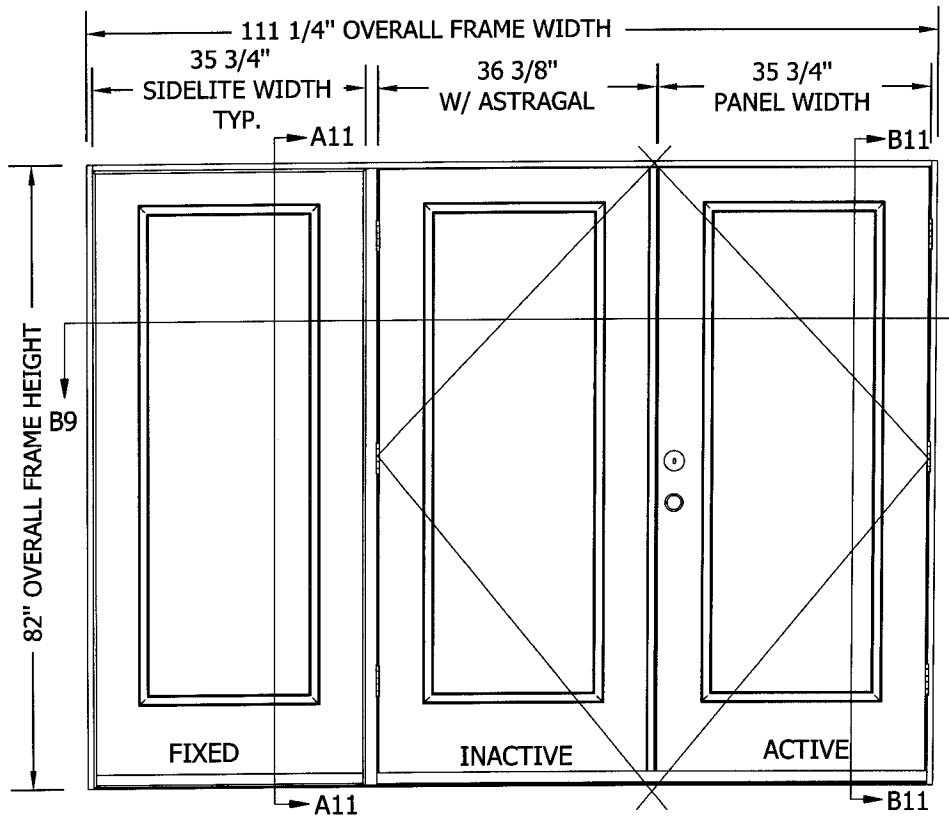

3 2 1 TRI UNIT (OXX) OR (XXO)
INSWING NON-IMPACT

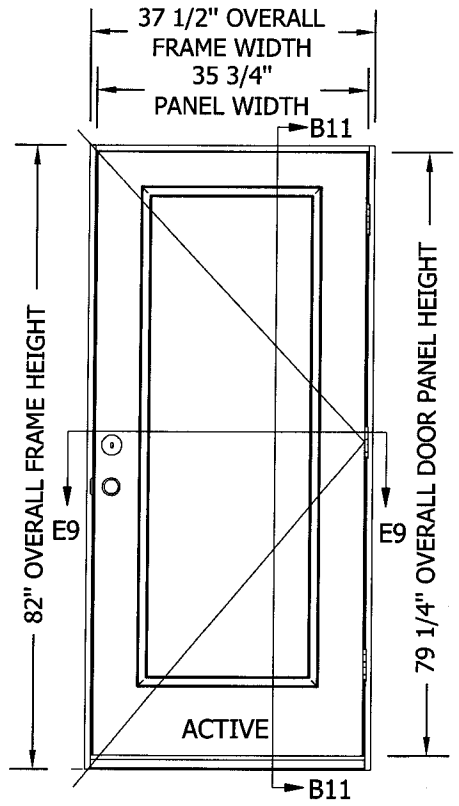

2 1 SINGLE UNIT X
INSWING NON-IMPACT

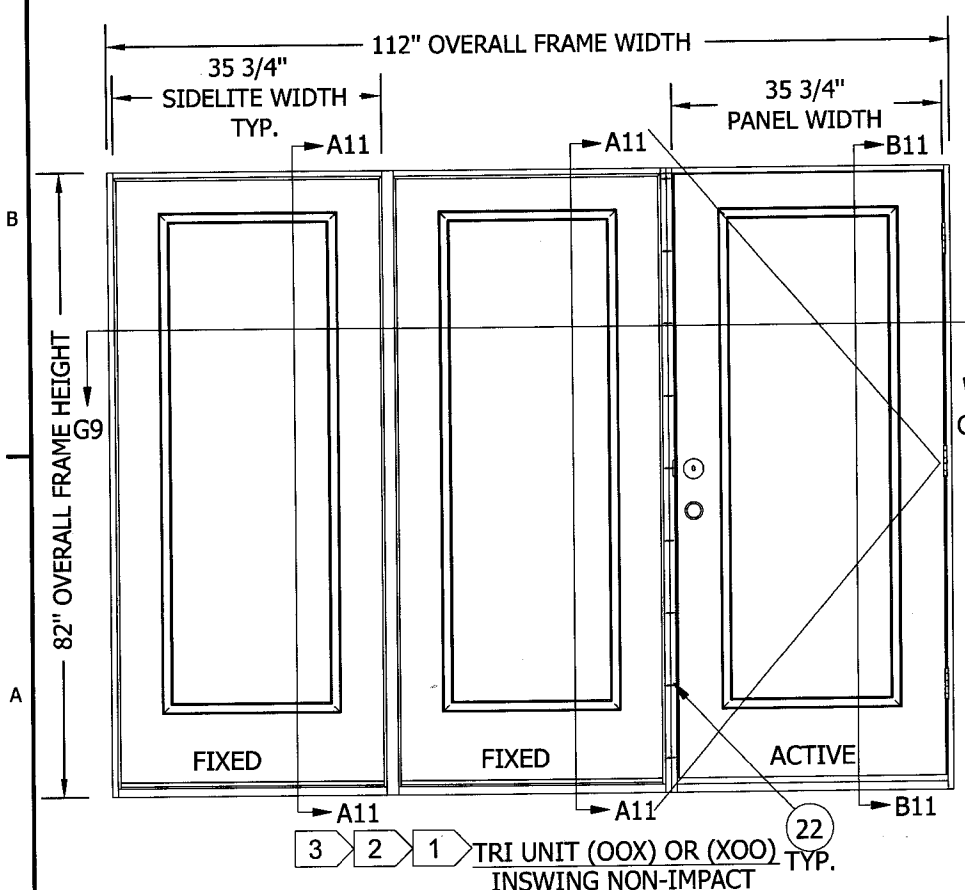

3 2 1 TRI UNIT (OOX) OR (XOO)
INSWING NON-IMPACT

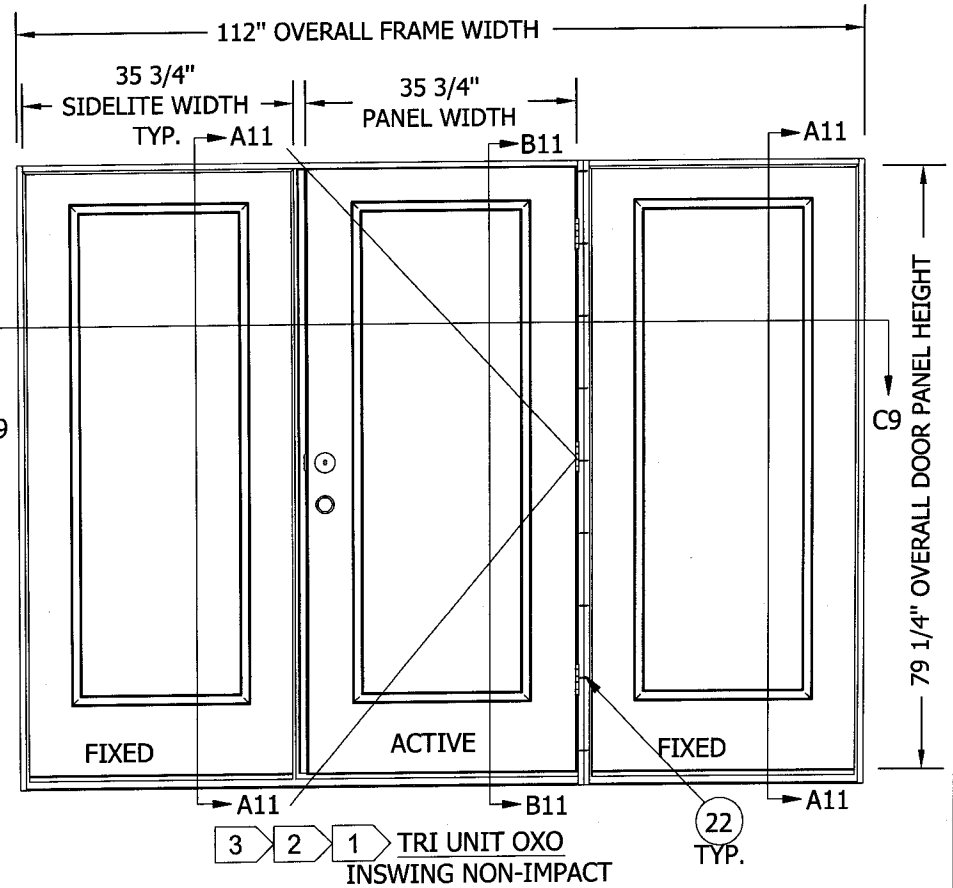

3 2 1 TRI UNIT OXO
INSWING NON-IMPACT

NOTES:

1. ALL INSWING VIEWS ARE FROM INTERIOR.
2. SEE SHEET 12 FOR ALTERNATE BUCK/SUBSTRATE INSTALLATIONS.
3. MULL POST & DOUBLE BACK JAMBS ARE INTERCHANGEABLE.

JELD-WEN, inc.
Research and Development
3737 Lakeport Blvd.
Klamath Falls, Oregon 97601
Ph. (541) 882-3451
Fax (541) 850-2609

PRODUCT: DESIGN/SMOOTH PRO-PLUS FULL LITE DOOR
PART OR ASSEMBLY: 12-4 X 6-8

INSWING DOOR ELEVATIONS

NO.	DATE	BY
REVISIONS		

2-26-10
Kristina S. Daugherty
CertWorks LLC.
Texas P.E. No. 104390
127 W. Fairbanks Ave. Ste. 438
Winter Park, FL 32789

DATE: 01/11/2010
SCALE: NO SCALE
DWG. BY: G.LUBBECKE
CHK. BY: S. FREY
DRAWING NO.: JW012010
SHEET 7 OF 16

THIS DRAWING AND ITS CONTENTS ARE CONFIDENTIAL AND ARE NOT TO BE REPRODUCED OR COPIED IN WHOLE OR IN PART OR USED OR DISCLOSED TO OTHERS EXCEPT AS AUTHORIZED BY JELD-WEN INC.

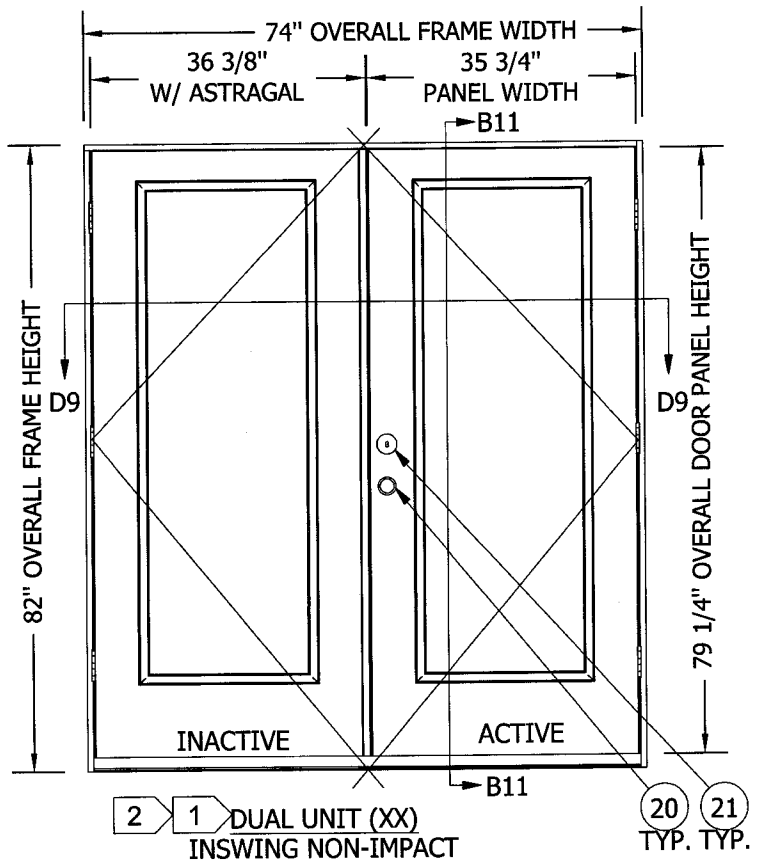

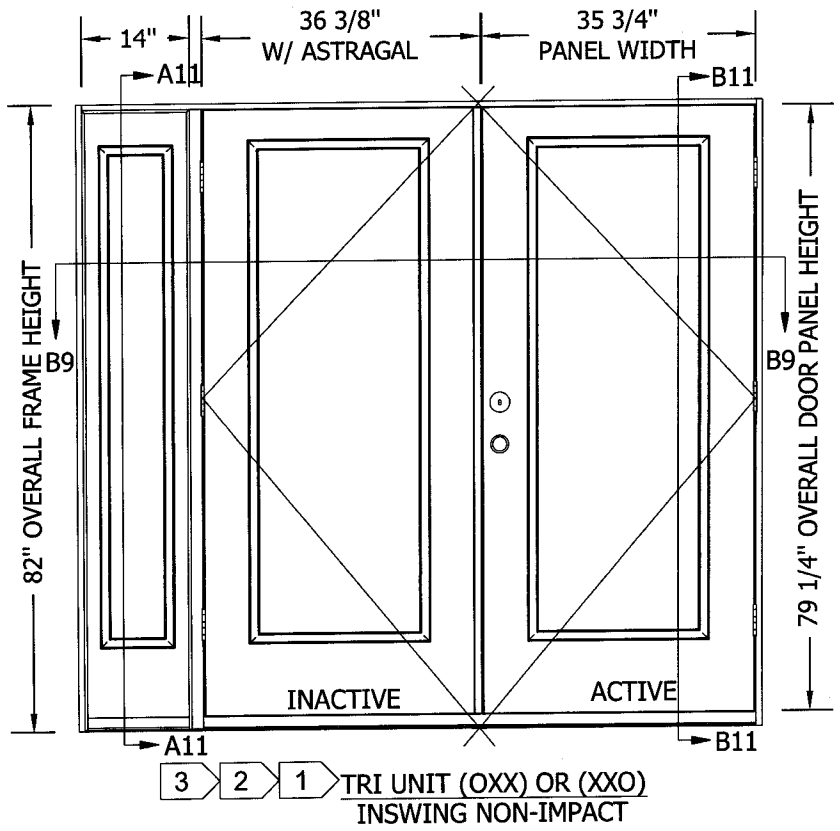

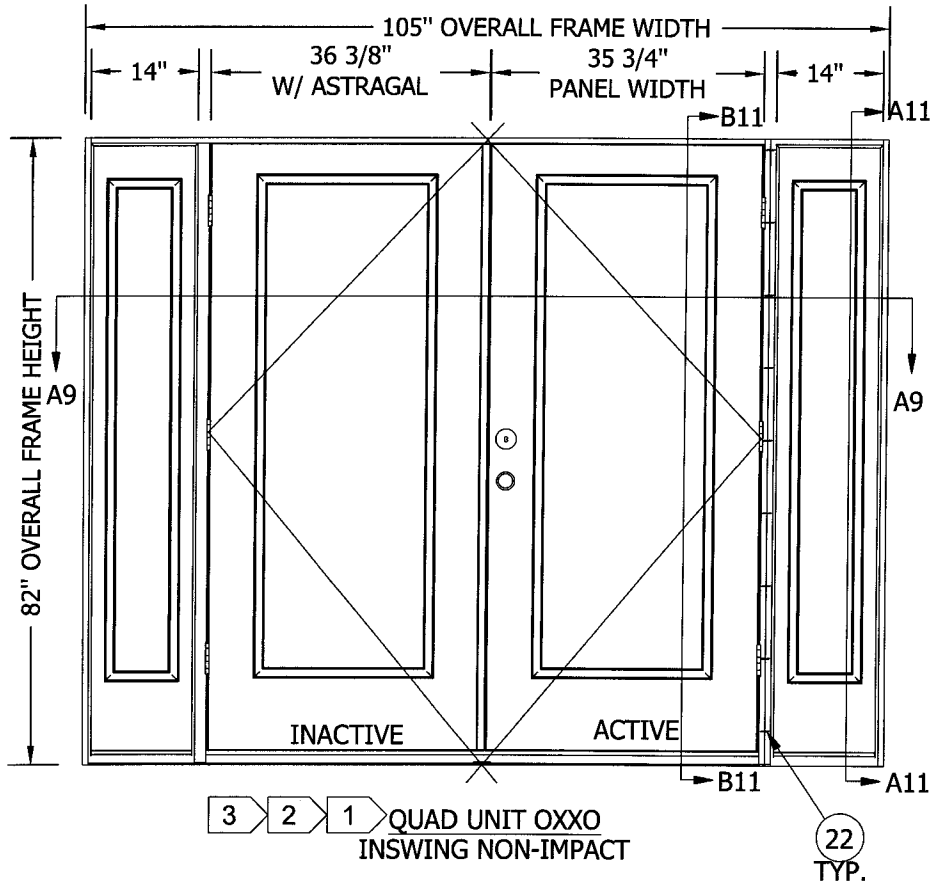

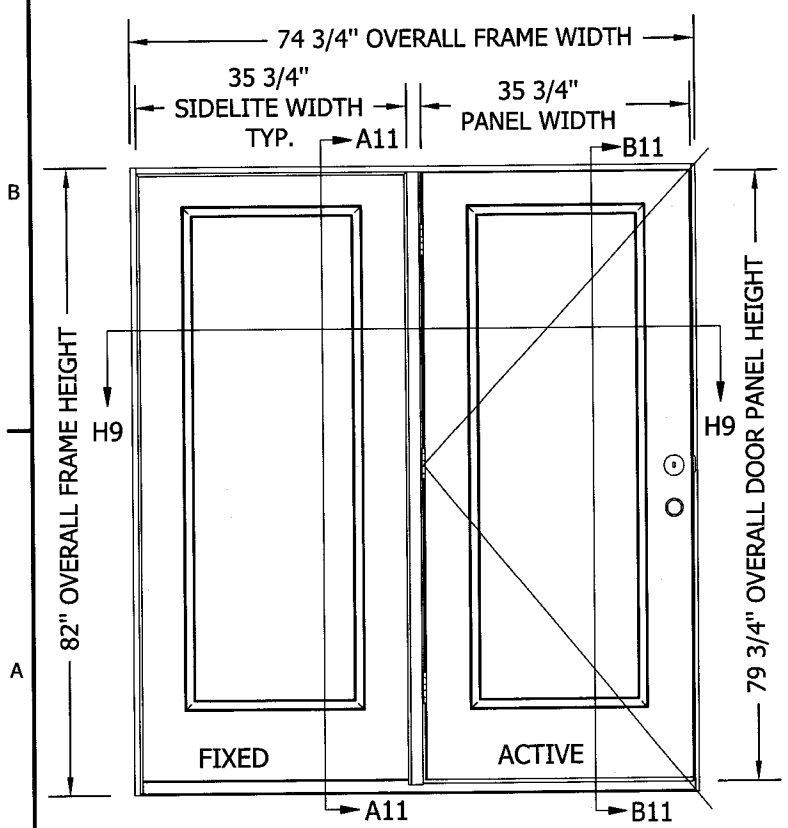

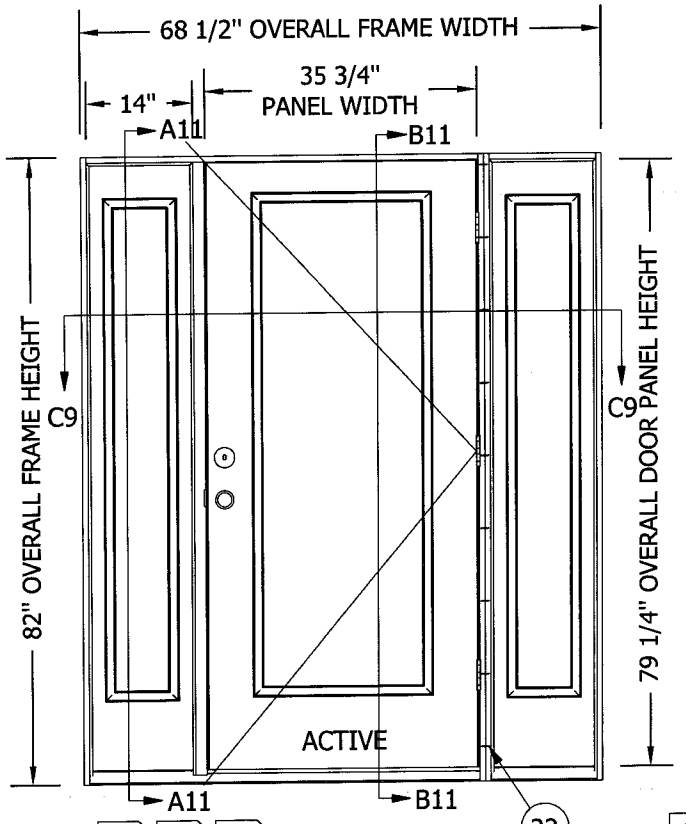

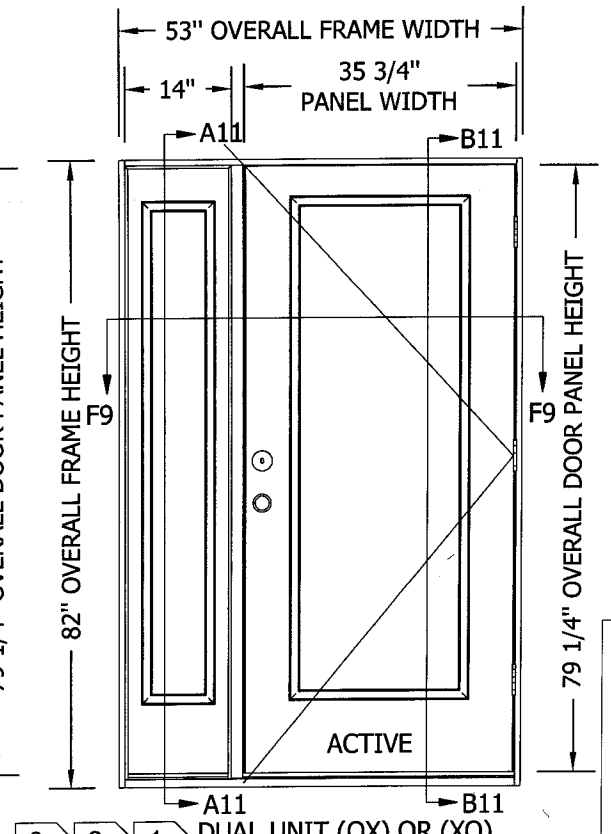

NOTES:

1. ALL INSWING VIEWS ARE FROM INTERIOR.
2. SEE SHEET 12 FOR ALTERNATE BUCK/SUBSTRATE INSTALLATIONS.
3. MULL POST & DOUBLE BACK JAMBS ARE INTERCHANGEABLE.

JELD-WEN, inc.
Research and Development
3737 Lakeport Blvd.
Klamath Falls, Oregon 97601
Ph. (541) 882-3451
Fax (541) 850-2609

PRODUCT: DESIGN/SMOOTH PRO-PLUS FULL LITE DOOR
PART OR ASSEMBLY: 12-4 X 6-8
INSWING DOOR ELEVATIONS

NO.	DATE	REVISIONS	BY

Kristina S. Daugherty
2-26-10
CertWorks LLC.
Texas P.E. No. 104390
127 W. Fairbanks Ave. Ste. 438
Winter Park, FL 32789

DATE: 01/11/2010
SCALE: NO SCALE
DWG. BY: G.LUBBECKE
CHK. BY: S. FREY
DRAWING NO.: JW012010
SHEET 8 OF 16

THIS DRAWING AND ITS CONTENTS ARE CONFIDENTIAL AND ARE NOT TO BE REPRODUCED OR COPIED IN WHOLE OR IN PART OR USED OR DISCLOSED TO OTHERS EXCEPT AS AUTHORIZED BY JELD-WEN INC.

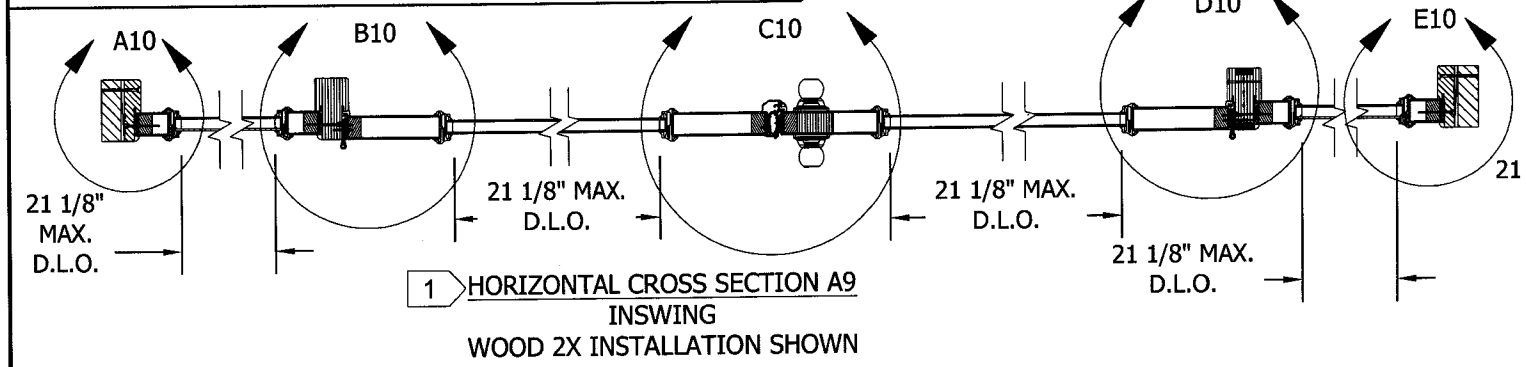

1 HORIZONTAL CROSS SECTION A9
INSWING
WOOD 2X INSTALLATION SHOWN

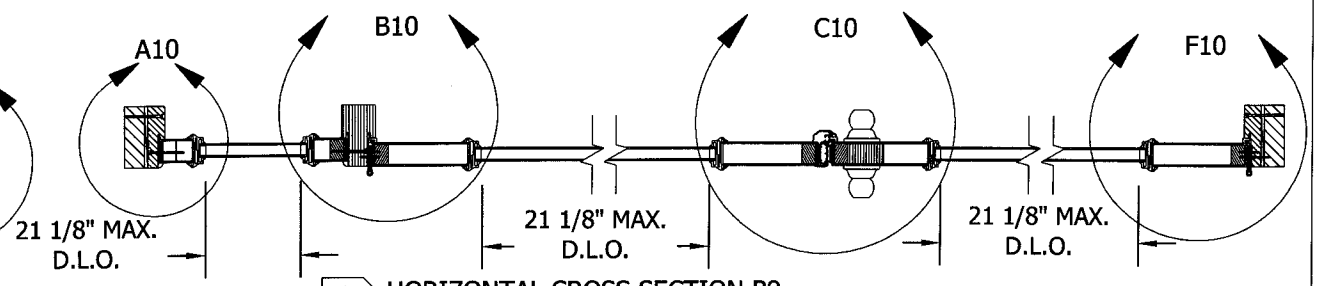

1 HORIZONTAL CROSS SECTION B9
INSWING
WOOD 2X INSTALLATION SHOWN

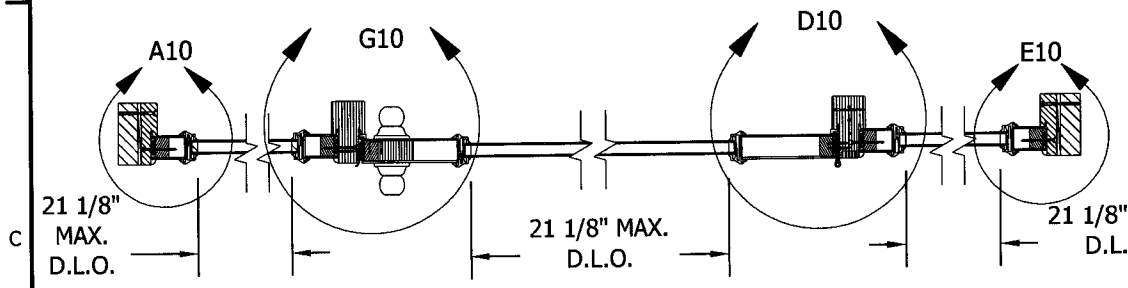

1 HORIZONTAL CROSS SECTION C9
INSWING
WOOD 2X INSTALLATION SHOWN

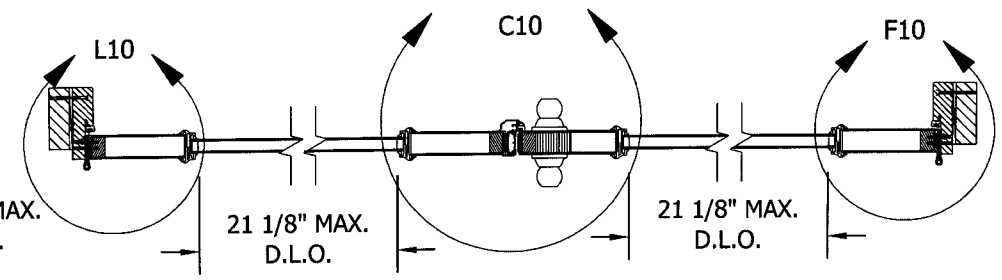

HORIZONTAL CROSS SECTION D9
INSWING
WOOD 2X INSTALLATION SHOWN

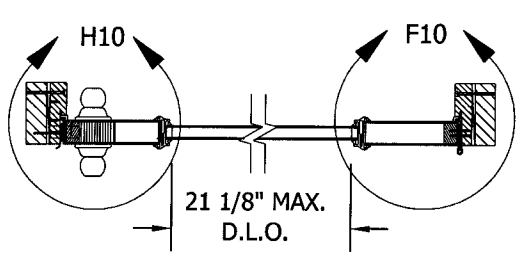

HORIZONTAL CROSS SECTION E9
INSWING
WOOD 2X INSTALLATION SHOWN

↓EXTERIOR VIEW↓

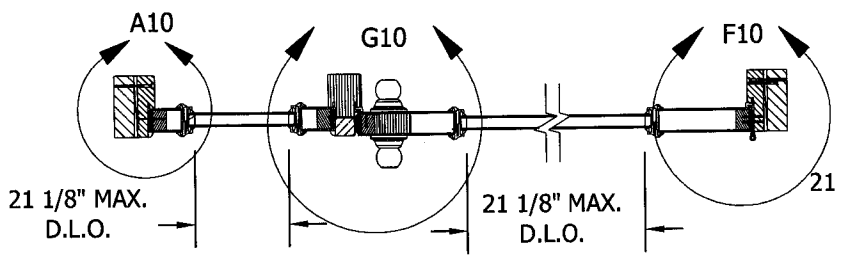

1 HORIZONTAL CROSS SECTION F9
INSWING
WOOD 2X INSTALLATION SHOWN

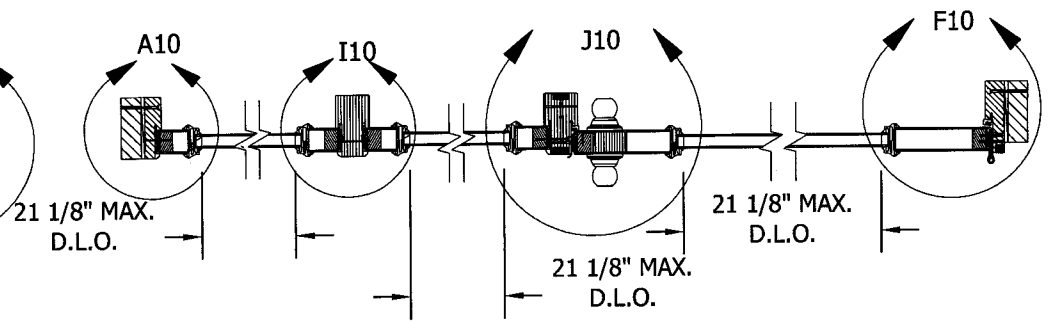

1 HORIZONTAL CROSS SECTION G9
INSWING
WOOD 2X INSTALLATION SHOWN

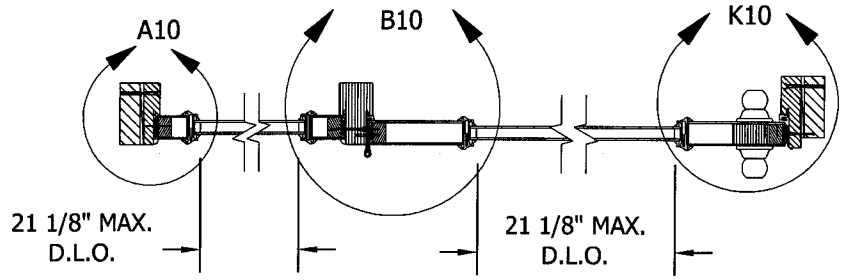

1 HORIZONTAL CROSS SECTION H9
INSWING
WOOD 2X INSTALLATION SHOWN

NOTES:

1 MULL POST & DOUBLE BACK JAMBS ARE INTERCHANGEABLE.

JELD-WEN, inc.
Research and Development
3737 Lakeport Blvd.
Klamath Falls, Oregon 97601
Ph. (541) 882-3451
Fax (541) 850-2609

PRODUCT: DESIGN/SMOOTH PRO-PLUS FULL LITE DOOR
PART OR ASSEMBLY: 12-4 X 6-8
INSWING HORIZONTAL CROSS SECTIONS

NO.	DATE	BY	REVISIONS

Kristina S. Daugherty 2-26-10
CertWorks LLC
Texas P.E. No. 104390
127 W. Fairbanks Ave. Ste. 438
Winter Park, FL 32789

DATE: 01/11/2010
SCALE: NO SCALE
DWG. BY: G.LUBBECKE
CHK. BY: S. FREY
DRAWING NO.: JW012010
SHEET 9 OF 16

THIS DRAWING AND ITS CONTENTS ARE CONFIDENTIAL AND ARE NOT TO BE REPRODUCED OR COPIED IN WHOLE OR IN PART OR USED OR DISCLOSED TO OTHERS EXCEPT AS AUTHORIZED BY JELD-WEN INC.

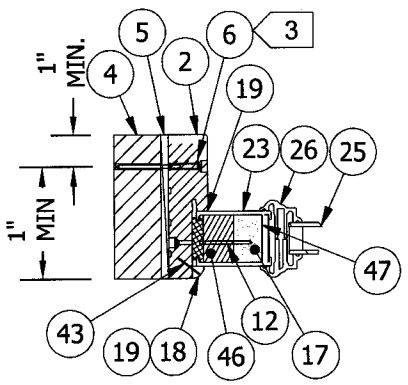

DETAIL A10
2 SIDELITE AT SIDE JAMB

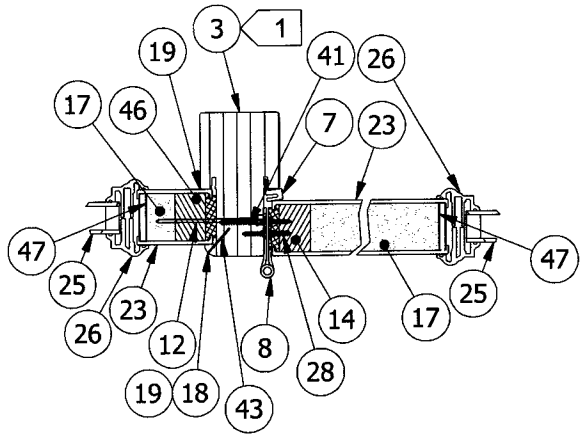

DETAIL B10
SIDELITE/HINGE STILE
AT MULL POST

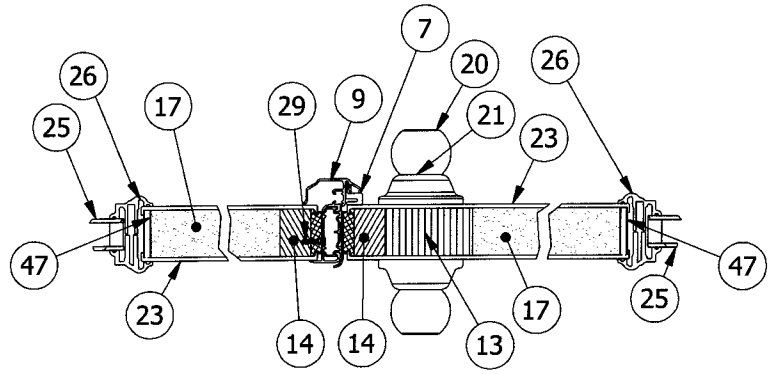

DETAIL C10
DOORS AT ASTRAGAL

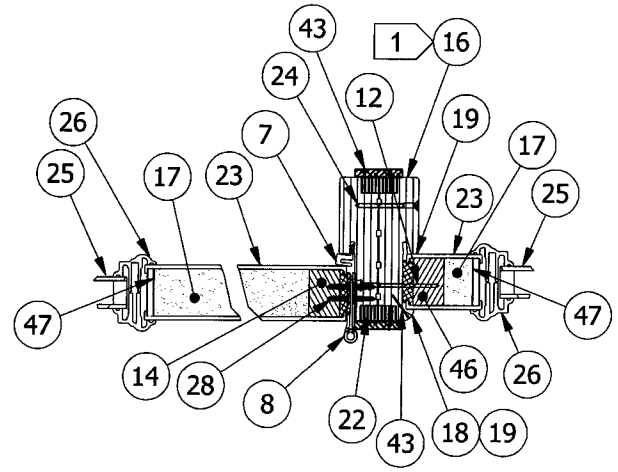

5 DETAIL D10
HINGE STILE/SIDELITE
AT DOUBLE BACK JAMB

EXTERIOR VIEW

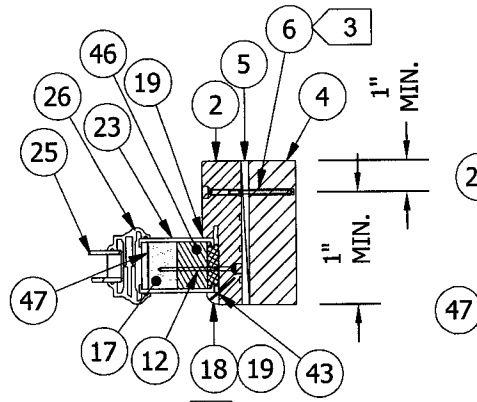

2 DETAIL E10
SIDELITE AT SIDE JAMB

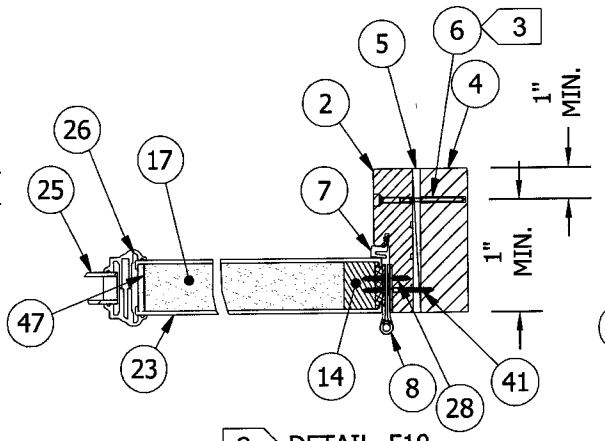

2 DETAIL F10
HINGE STILE AT
SIDE JAMB

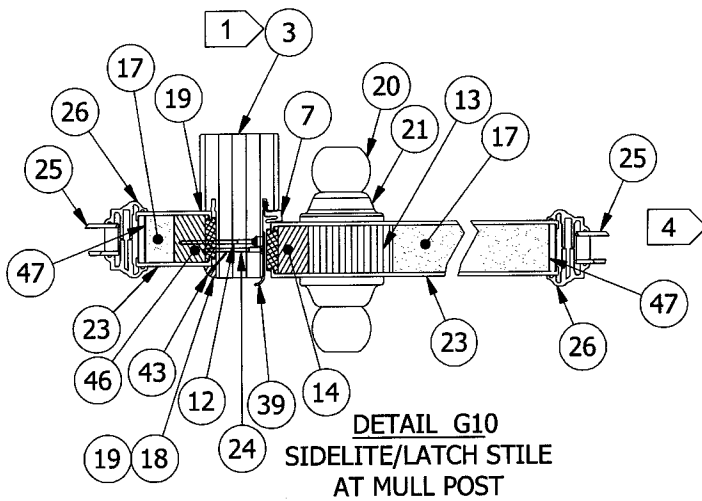

DETAIL G10
SIDELITE/LATCH STILE
AT MULL POST

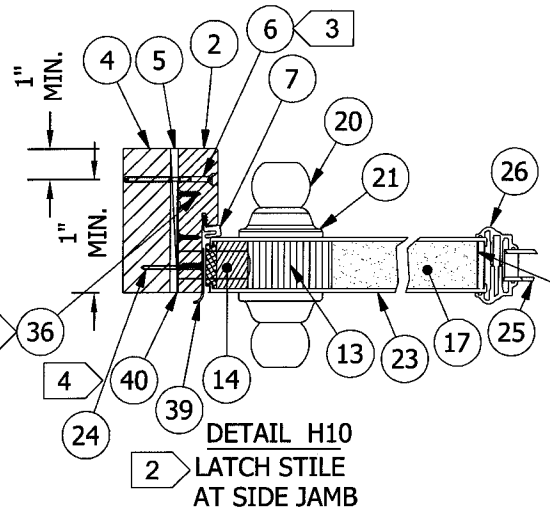

2 DETAIL H10
LATCH STILE
AT SIDE JAMB

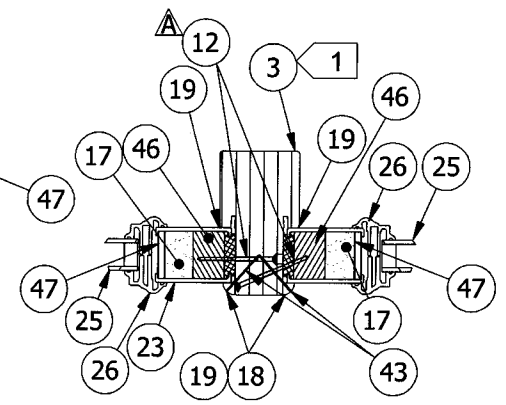

DETAIL I10
SIDELITES
AT MULL POST

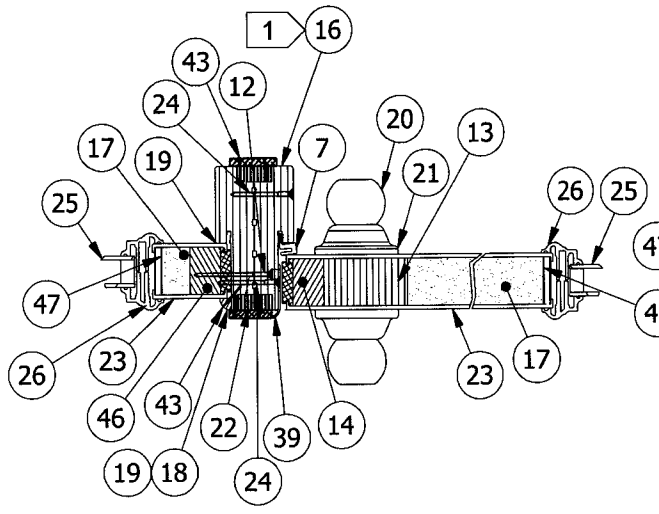

5 DETAIL J10
SIDELITE/LATCH STILE
AT DOUBLE BACK JAMB

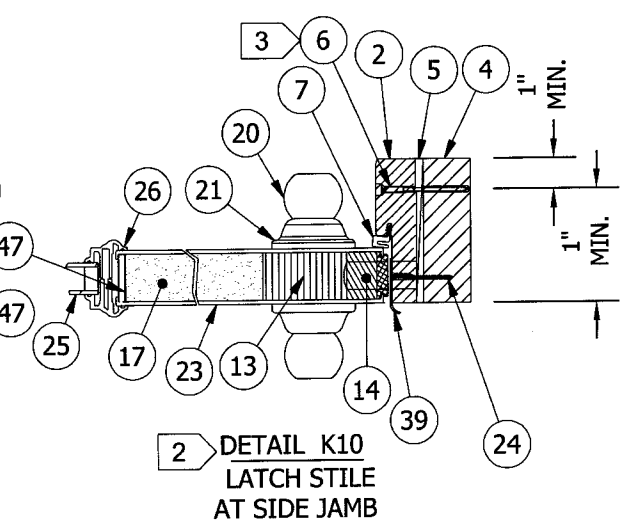

2 DETAIL K10
LATCH STILE
AT SIDE JAMB

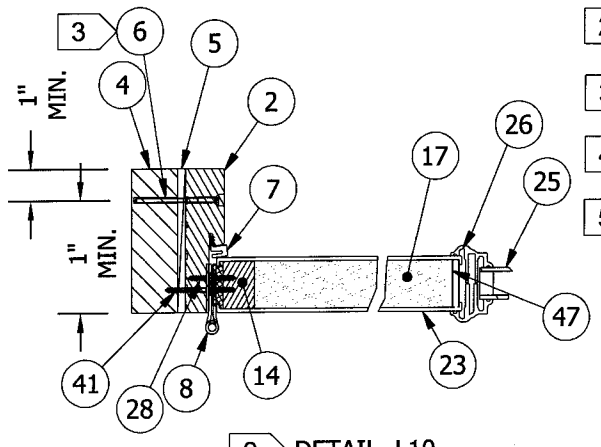

2 DETAIL L10
HINGE STILE AT
SIDE JAMB

NOTES:

1. MULL POST & DOUBLE BACK JAMBS ARE INTERCHANGEABLE.
2. SEE SHEET 12 FOR ALTERNATE BUCK/SUBSTRATE INSTALLATIONS.
3. MIN FASTENER EMBEDMENT INTO WOOD IS 1-1/2".
4. ITEMS #36 & #40 ONLY USED ON SINGLE OPERATING UNITS.
5. CORRUGATED NAILS (ITEM #22) ON BOTH INT. AND EXT. OF MULL.

Kristina S. Daugherty
CertWorks LLC
Texas P.E. No. 104390
127 W. Fairbanks Ave. Ste. 438
Winter Park, FL 32789

JELD-WEN, inc.
Research and Development
3737 Lakeport Blvd.
Klamath Falls, Oregon 97601
Ph. (541) 882-3451
Fax (541) 850-2609

PRODUCT: DESIGN/SMOOTH PRO-PLUS FULL LITE DOOR
PART OR ASSEMBLY: INSWING HORIZONTAL CROSS SECTION DETAILS
12-4 X 6-8

NO.	DATE	REVISIONS	BY
A	02/03/2010	ADDED FASTENERS	GL

DATE: 01/11/2010
SCALE: NO SCALE
DWG. BY: G.LUBBECKE
CHK. BY: S. FREY
DRAWING NO.: JW012010
SHEET 10 OF 16

THIS DRAWING AND ITS CONTENTS ARE CONFIDENTIAL AND ARE NOT TO BE REPRODUCED OR COPIED IN WHOLE OR IN PART OR USED OR DISCLOSED TO OTHERS EXCEPT AS AUTHORIZED BY JELD-WEN INC.

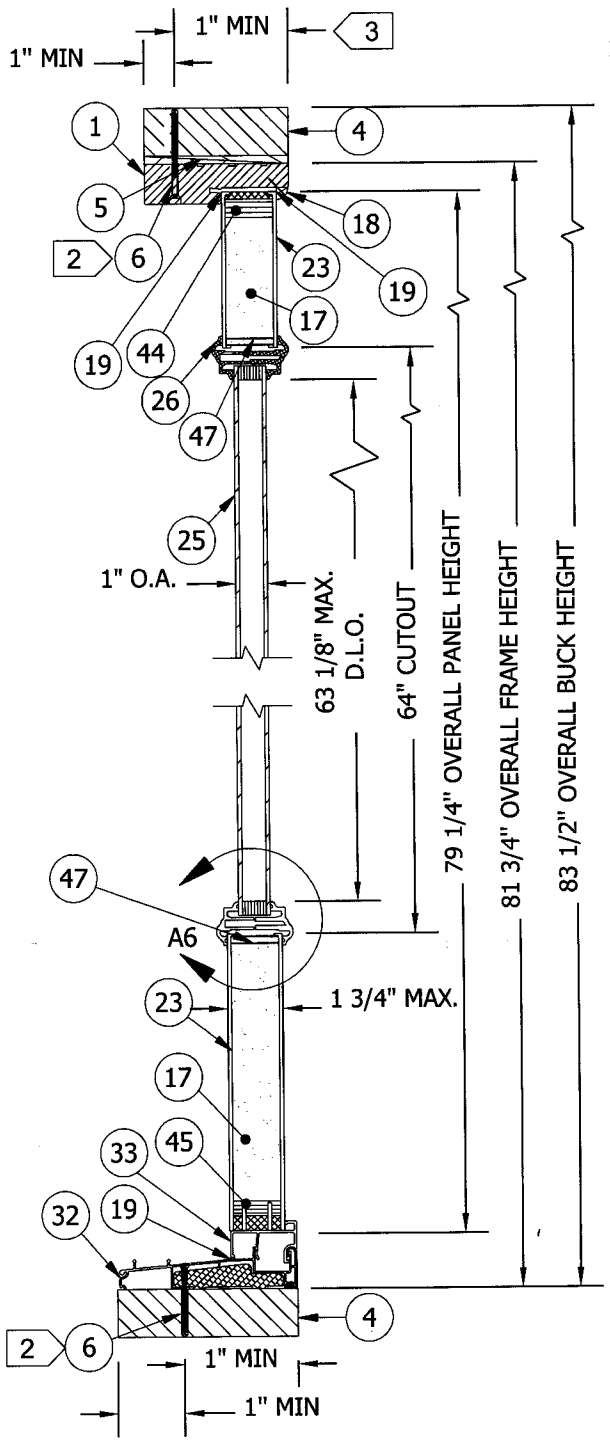

DETAIL A11
1 INSWING VERTICAL CROSS SECTION OF SIDELITE 2X WOOD BUCK SHOWN

EXTERIOR→

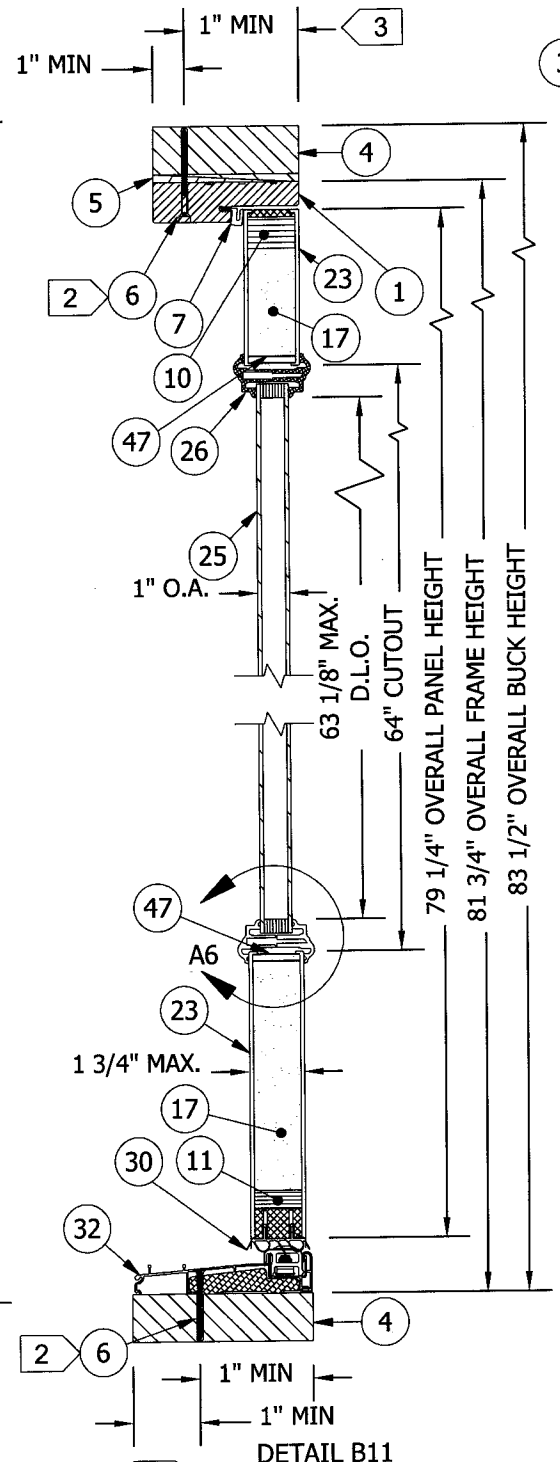

DETAIL B11
1 INSWING VERTICAL CROSS SECTION OF DOOR 2X WOOD BUCK SHOWN

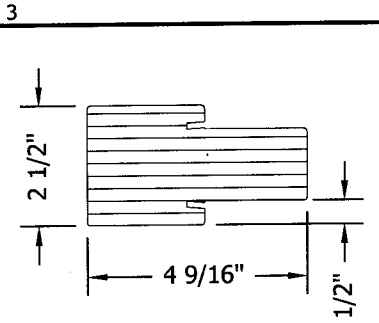

3 MULL POST
LAMINATED VENEER LUMBER (LVL)
SCALE: 1/4

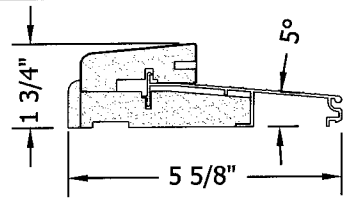

31 OUTSWING SILL
AFCO 12/5 J-2297 WGC
SCALE: 1/4

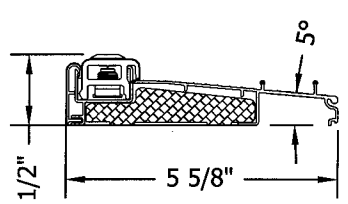

32 INSWING SILL
ENDURA ZAIL56WMF120DSNC
SCALE: 1/4

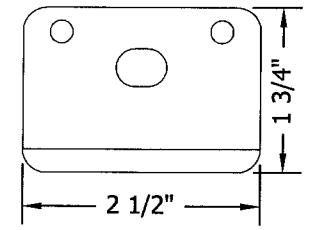

35 TOP/BOTTOM ASTRAGAL STRIKE PLATE (EXCEPT INSWING BOTTOM)
SCALE: 1/2

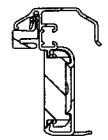

9 HURRICANE ASTRAGAL
SCALE: 1/4

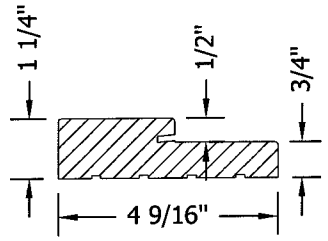

2 1 HEAD/SIDE JAMB
SCALE: 1/4

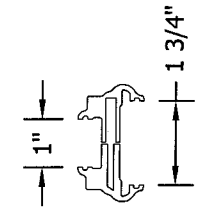

26 LIP LITE FRAME
SCALE: 1/4

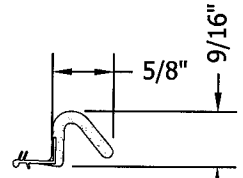

7 WEATHERSTRIP
SCALE: 1/2

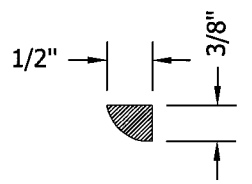

18 SCOTIA
SCALE: 1/2

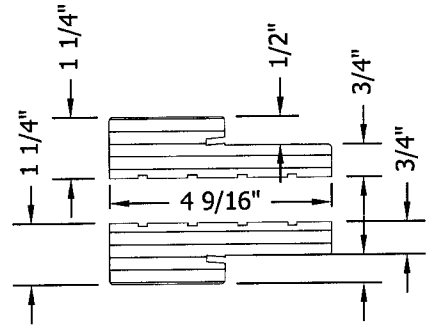

16 DOUBLE BACK JAMB
LAMINATED VENEER LUMBER (LVL)
SCALE: 1/4

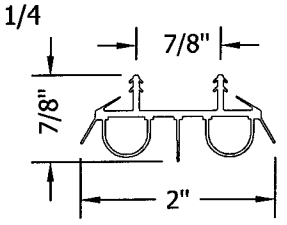

30 BOTTOM SWEEP
SCALE: 1/2

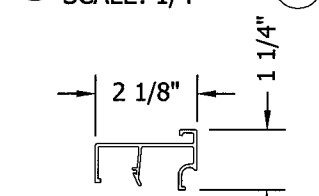

SIDELITE SEAT
33 FIXED UNITS ONLY
SCALE: 1/4

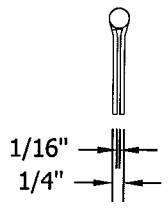

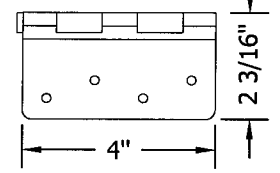

8 4 X 4 BUTT HINGE
SCALE: 1/4

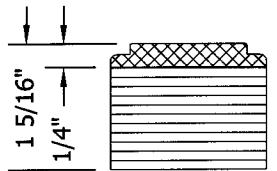

10 DOOR TOP RAIL
SCALE: 1/2

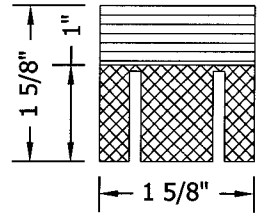

DOOR
11 BOTTOM RAIL
SCALE: 1/2

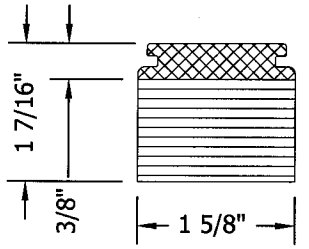

DOOR
14 LATCH/HINGE STILE
SCALE: 1/2

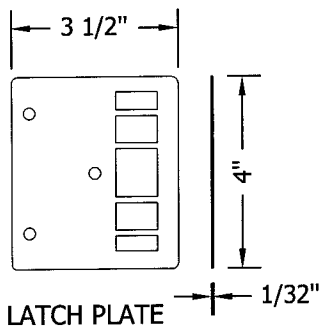

40 LATCH PLATE
SINGLE UNITS ONLY
SCALE: 1/4

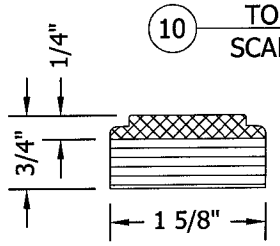

44 SIDELITE TOP RAIL
SCALE: 1/2

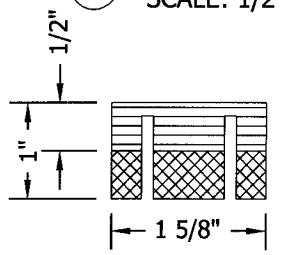

45 SIDELITE BOTTOM RAIL
SCALE: 1/2

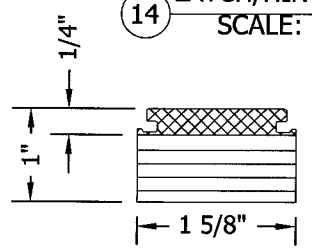

46 SIDELITE LATCH/HINGE STILE
SCALE: 1/2

NOTES:

1. SEE SHEET 12 FOR ALTERNATE BUCK/SUBSTRATE INSTALLATIONS.
2. MIN FASTENER EMBEDMENT INTO WOOD IS 1-1/2".
3. OPTIONALLY, ANCHOR CAN BE PLACED IN NARROW SECTION OF HEAD OR JAMB.

JELD-WEN, inc.
Research and Development
3737 Lakeport Blvd.
Klamath Falls, Oregon 97601
Ph. (541) 882-3451
Fax (541) 850-2609

PRODUCT: DESIGN/SMOOTH PRO-PLUS FULL LITE DOOR
12-4 X 6-8
PART OR ASSEMBLY: INSWING VERTICAL CROSS SECTIONS & COMPONENT DRAWINGS

NO.	DATE	REVISIONS	BY

DATE: 01/11/2010
SCALE: NO SCALE
DWG. BY: G.LUBBECKE
CHK. BY: S. FREY
DRAWING NO.: JW012010
SHEET 11 OF 16

2-26-10
Kristina S. Daugherty
CertWorks LLC
Texas P.E. No. 104390
127 W. Fairbanks Ave. Ste. 438
Winter Park, FL 32789

THIS DRAWING AND ITS CONTENTS ARE CONFIDENTIAL AND ARE NOT TO BE REPRODUCED OR COPIED IN WHOLE OR IN PART OR USED OR DISCLOSED TO OTHERS EXCEPT AS AUTHORIZED BY JELD-WEN INC.

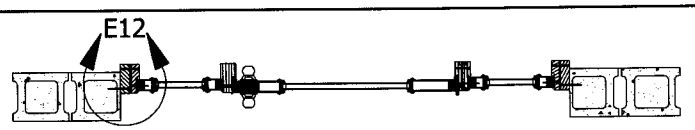

SECTION A12

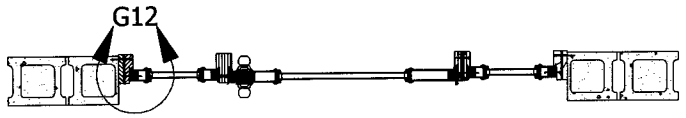

SECTION C12

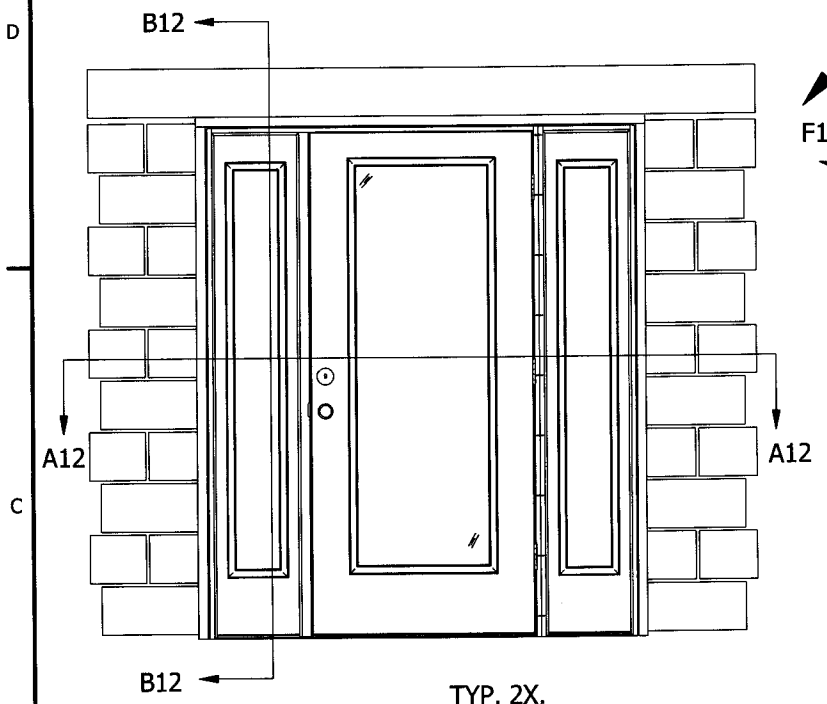

TYP. 2X.
MASONRY/CONCRETE
ANCHOR INSTALLATION

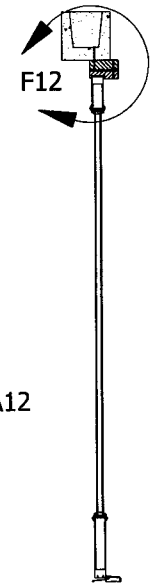

SECTION
B12

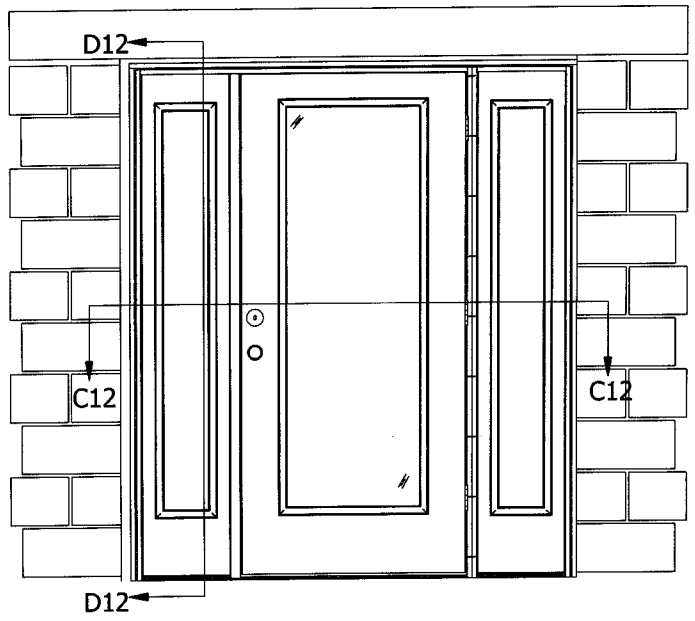

TYP. 1X.
MASONRY/CONCRETE
ANCHOR INSTALLATION

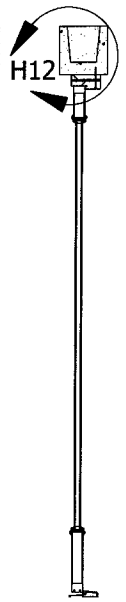

SECTION
D12

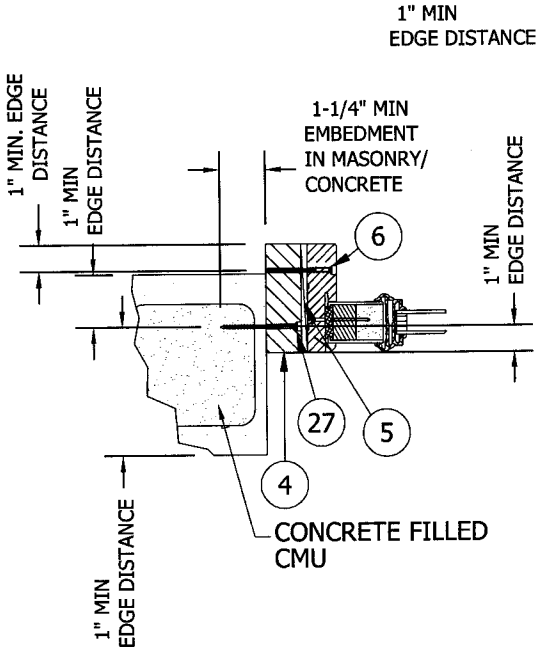

1 DETAIL E12
MASONRY/CONCRETE
ANCHOR INSTALLATION
TYP. FOR ALL SYSTEMS

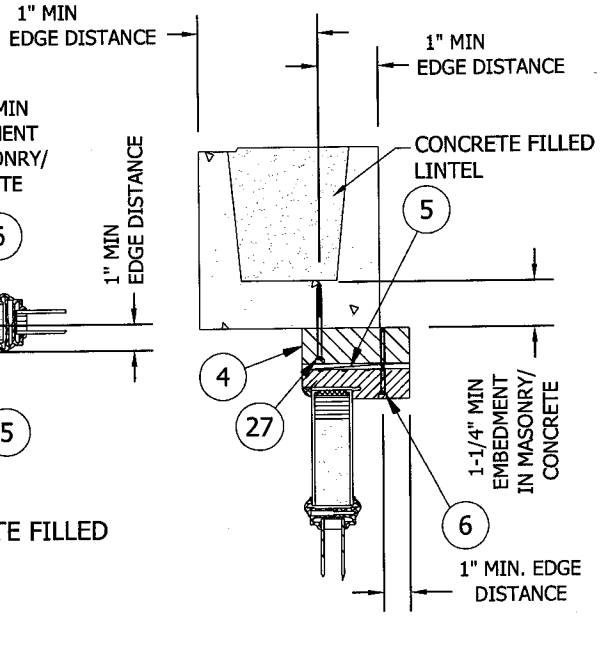

1 DETAIL F12
MASONRY/CONCRETE
ANCHOR INSTALLATION
TYP. FOR ALL SYSTEMS

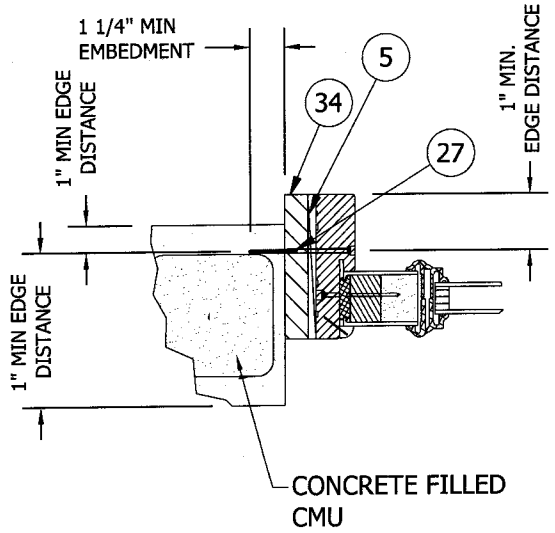

1 DETAIL G12
1X ANCHOR INSTALLATION
TYP. FOR ALL SYSTEMS

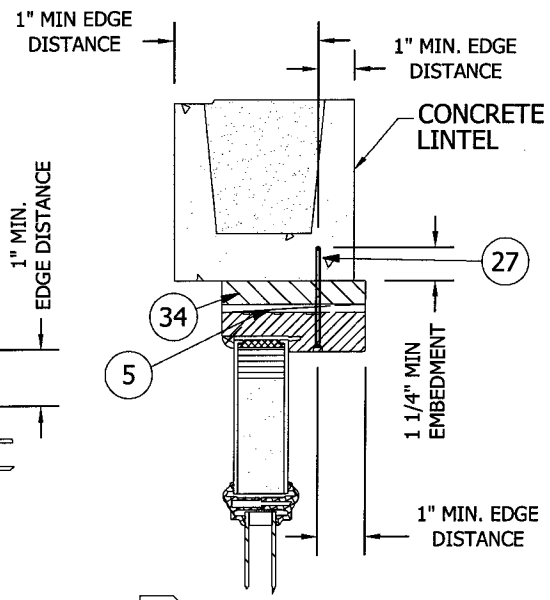

1 DETAIL H12
1X ANCHOR INSTALLATION
TYP. FOR ALL SYSTEMS

NOTE(S):

1 OPTIONAL IN NARROW SECTION OF FRAME

JELD-WEN, inc.
Research and Development
3737 Lakeport Blvd.
Klamath Falls, Oregon 97601
Ph. (541) 882-3451
Fax (541) 850-2609

PRODUCT: DESIGN/SMOOTH PRO-PLUS FULL LITE DOOR
PART OR ASSEMBLY: 12-4 X 6-8
ALTERNATE ANCHORING METHODS

NO.	DATE	REVISIONS	BY

DATE: 01/11/2010
SCALE: NO SCALE
DWG. BY: G.LUBBECKE
CHK. BY: S. FREY
DRAWING NO.: JW012010
SHEET 12 OF 16

2-26-10
Kristina S. Daugherty
CertWorks LLC.
Texas P.E. No. 104390
127 W. Fairbanks Ave. Ste. 438
Winter Park, FL 32789

THIS DRAWING AND ITS CONTENTS ARE CONFIDENTIAL AND ARE NOT TO BE REPRODUCED OR COPIED IN WHOLE OR IN PART OR USED OR DISCLOSED TO OTHERS EXCEPT AS AUTHORIZED BY JELD-WEN INC.

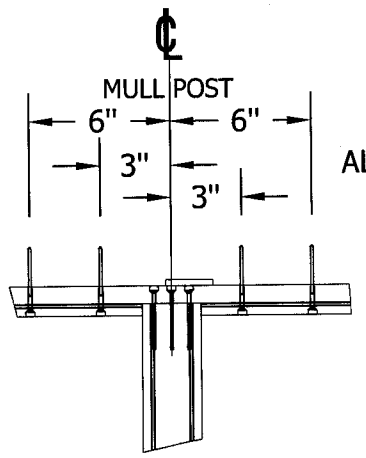

6 DETAIL A13
TYP. FASTENER ANCHOR FOR ALL SOLID MULL POSTS

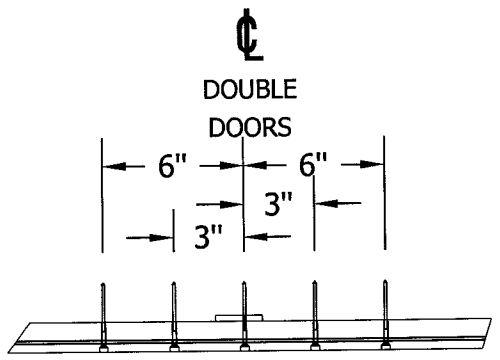

6 DETAIL B13
TYP. FASTENER ANCHOR FOR ALL DOUBLE DOORS W/ ASTRAGALS

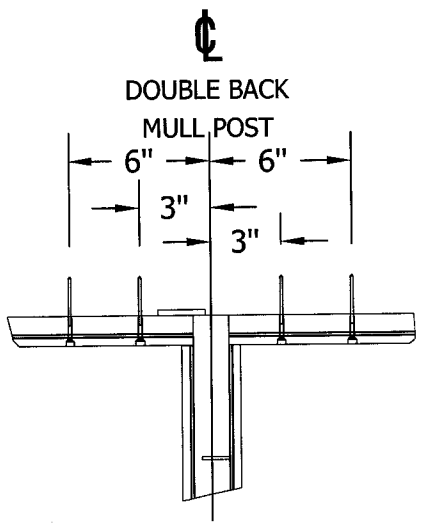

6 DETAIL C13
TYP. FASTENER ANCHOR FOR ALL DOUBLE BACK MULL POSTS

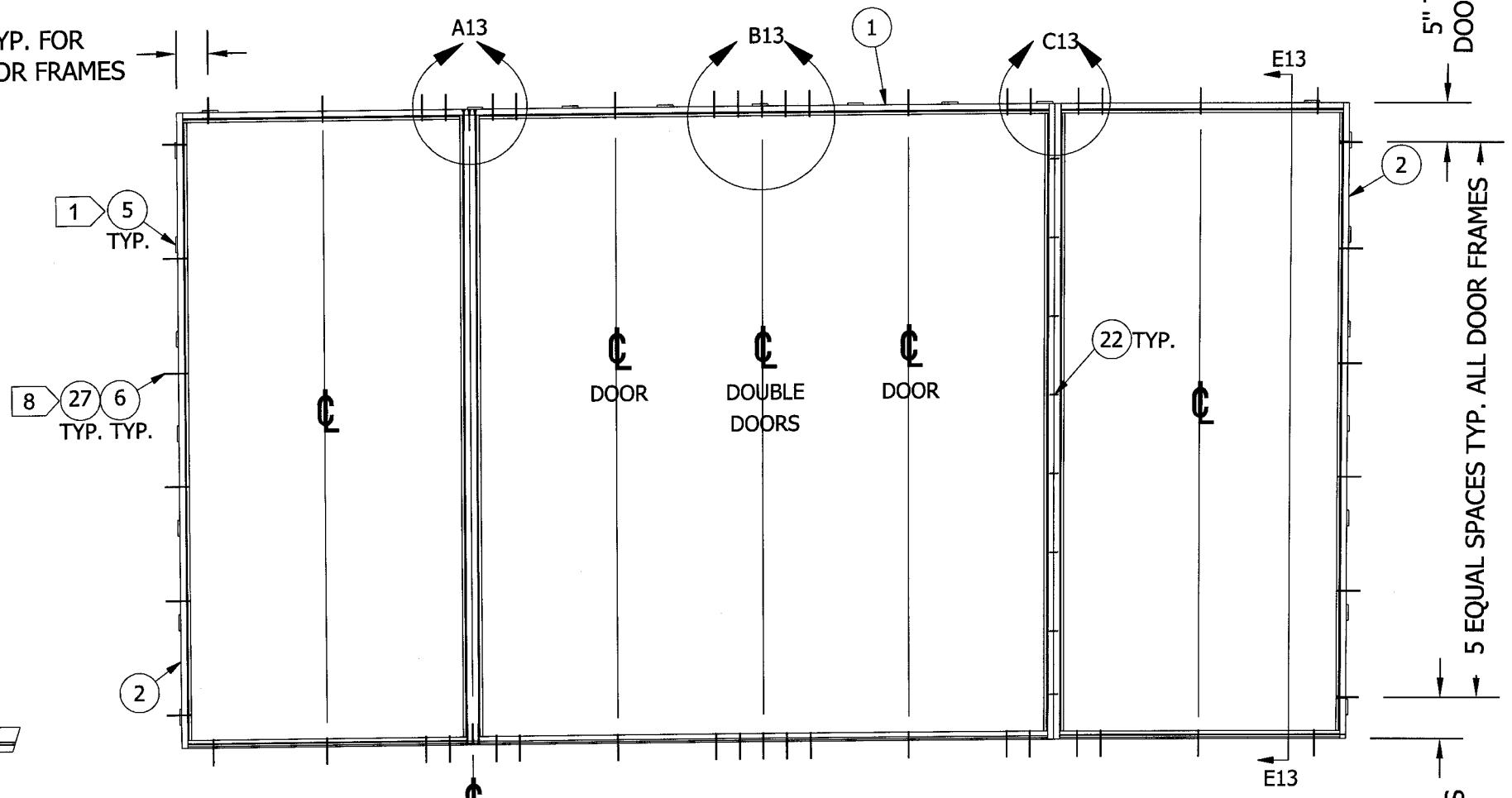

10 9 7 6 4 3 2 QUAD UNIT OXXO ANCHOR SPACING

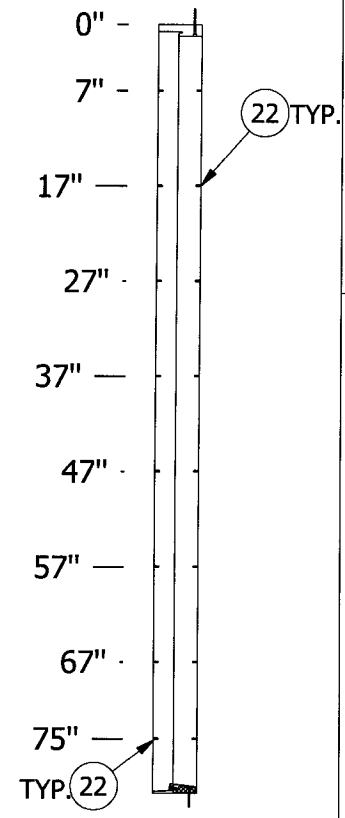

SECTION E13
5 TYP. CORRUGATED FASTENER LOCATIONS FOR ALL MULL POSTS

NOTES:

1. NUMBER AND SPACING OF SHIMS IS AS REQUIRED.
2. ANCHOR DETAILS TYPICAL FOR ALL DOOR SYSTEMS.
3. SEE SHEET 12 FOR ALTERNATIVE SUBSTRATE ANCHORING.
4. SEE SHEET 14 FOR ADDITIONAL DOOR SYSTEMS.
5. INSTALL CORRUGATED FASTENERS ON EXTERIOR AND INTERIOR SIDE OF DOUBLE BACK JAMBS.
6. SPACING OF SILL ANCHORS IS SAME AS FOR HEADER.
7. SPACING APPLICABLE FOR BOTH INSWING & OUTSWING SYSTEMS.
8. IF FASTENERS WILL BE ANCHORED IN WOOD, MIN EMBEDMENT WILL BE 1-1/2".
   IF FASTENERS WILL BE ANCHORED IN MASONRY/CONCRETE, MIN EMBEDMENT WILL BE 1-1/4"
9. SEE SHEET 15 FOR ADDITIONAL MULL AND CORNER CONSTRUCTION.
10. OPTIONALLY, ANCHOR CAN BE PLACED IN NARROW SECTION OF HEAD AND JAMB AS LONG AS MINIMUM EMBEDMENT CAN BE MET.

JELD-WEN, inc.
Research and Development
3737 Lakeport Blvd.
Klamath Falls, Oregon 97601
Ph. (541) 882-3451
Fax (541) 850-2609

PRODUCT: DESIGN/SMOOTH PRO-PLUS FULL LITE DOOR
PART OR ASSEMBLY: 12-4 X 6-8
INSWING AND OUTSWING ANCHORING DETAILS

NO.	DATE	REVISIONS	BY

DATE: 01/11/2010
SCALE: NO SCALE
DWG. BY: G.LUBBECKE
CHK. BY: S. FREY
DRAWING NO.: JW012010
SHEET 13 OF 16

2-26-10
Kristina S. Daugherty
CertWorks LLC.
Texas P.E. No. 104390
127 W. Fairbanks Ave. Ste. 438
Winter Park, FL 32789

THIS DRAWING AND ITS CONTENTS ARE CONFIDENTIAL AND ARE NOT TO BE REPRODUCED OR COPIED IN WHOLE OR IN PART OR USED OR DISCLOSED TO OTHERS EXCEPT AS AUTHORIZED BY JELD-WEN INC.

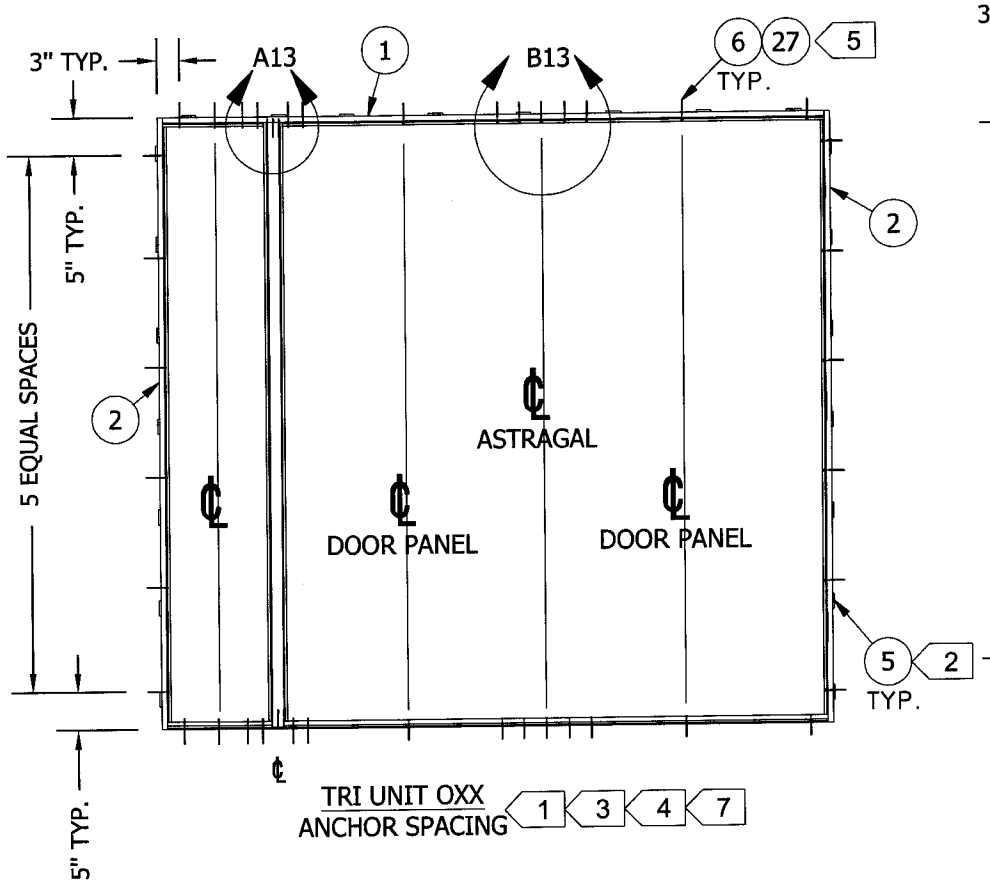

TRI UNIT OXX
ANCHOR SPACING 1 3 4 7

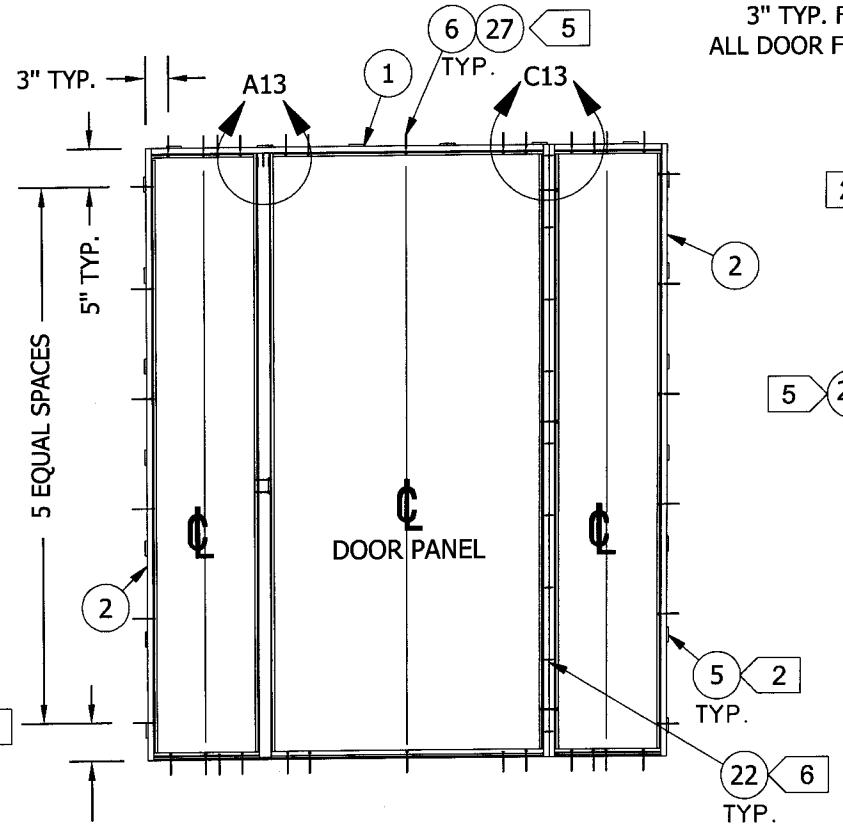

TRI UNIT OXO
ANCHOR SPACING 1 3 4 7

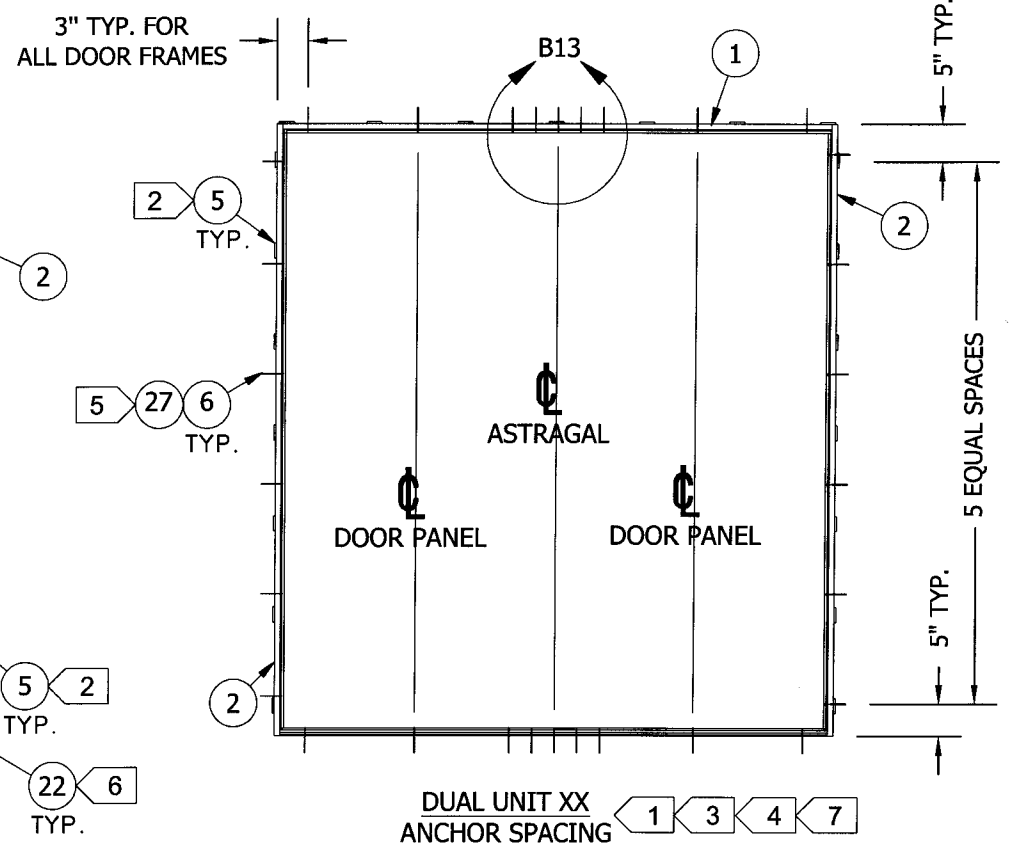

DUAL UNIT XX
ANCHOR SPACING 1 3 4 7

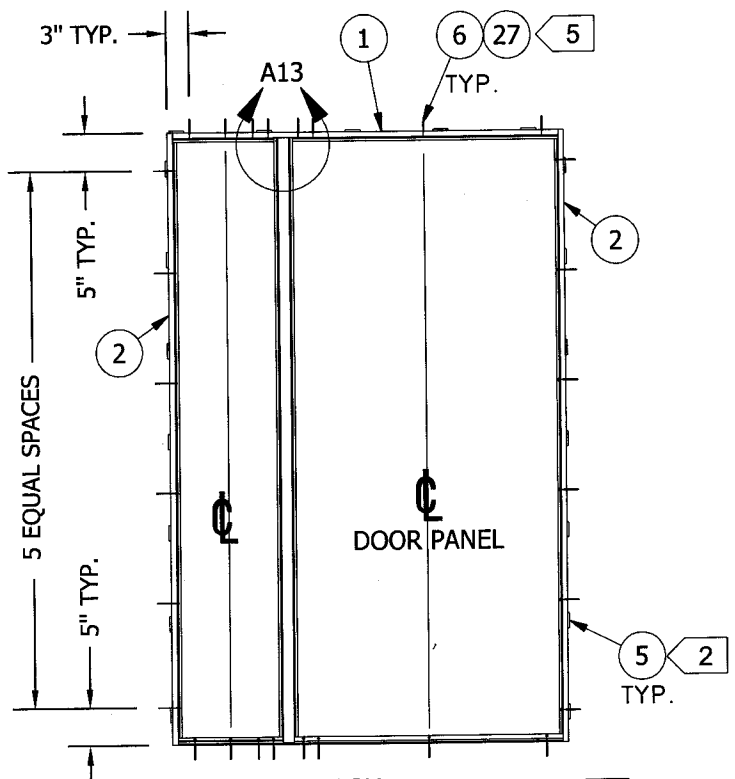

DOUBLE UNIT OX
ANCHOR SPACING 1 3 4 7

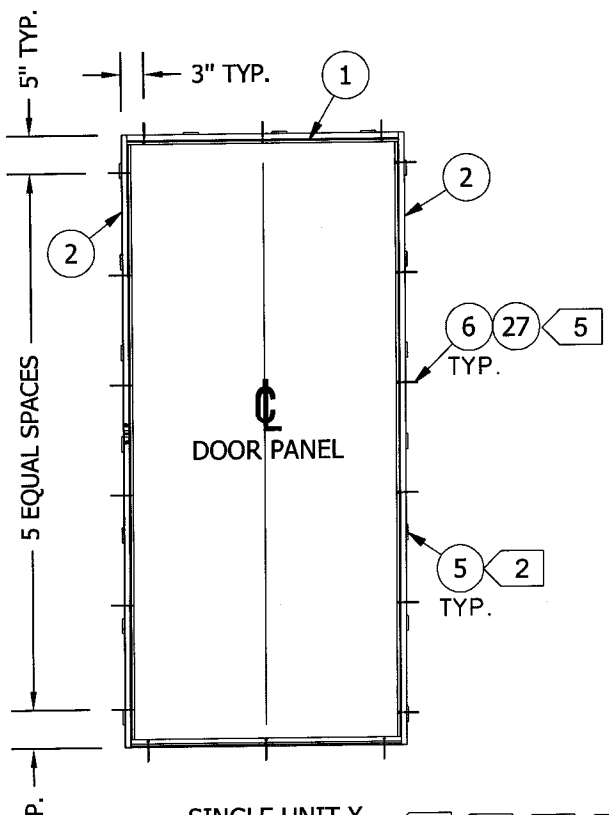

SINGLE UNIT X
ANCHOR SPACING 1 3 4 7 8

NOTES:

1. SPACING APPLICABLE FOR BOTH INSWING & OUTSWING SYSTEMS.
2. NUMBER AND SPACING OF SHIMS IS AS REQUIRED.
3. SEE SHEET 12 FOR ALTERNATIVE SUBSTRATE ANCHORING.
4. SPACING OF SILL ANCHORS IS SAME AS FOR HEADER.
5. IF FASTENERS WILL BE ANCHORED IN WOOD, MIN EMBEDMENT WILL BE 1-1/2". IF FASTENERS WILL BE ANCHORED IN MASONRY/CONCRETE, MIN. EMBEDMENT WILL BE 1-1/4".
6. SEE SHEET 13 FOR CORRUGATED ANCHOR (ITEM #22) SPACING.
7. OPTIONALLY, ANCHOR CAN BE PLACED IN NARROW SECTION OF HEAD AND JAMB AS LONG AS MINIMUM EMBEDMENT CAN BE MET.
8. DP RATING +/-60 & +/-66 PSF FOR OUTSWING & INSWING SINGLE DOOR ONLY, RESPECTIVELY. SEE SPACING AND ANCHOR DETAILS.

JELD-WEN, inc.
Research and Development
3737 Lakeport Blvd.
Klamath Falls, Oregon 97601
Ph. (541) 882-3451
Fax (541) 850-2609

PRODUCT: DESIGN/SMOOTH PRO-PLUS FULL LITE DOOR
PART OR ASSEMBLY: 12-4 x 6-8
INSWING AND OUTSWING ANCHORING DETAILS

NO.	DATE	REVISIONS	BY

Kristina S. Daugherty
2-26-10
CertiWorks LLC.
Texas P.E. No. 104390
127 W. Fairbanks Ave. Ste. 438
Winter Park, FL 32789

DATE: 01/11/2010
SCALE: NO SCALE
DWG. BY: G.LUBBECKE
CHK. BY: S. FREY
DRAWING NO.: JW012010
SHEET 14 OF 16

THIS DRAWING AND ITS CONTENTS ARE CONFIDENTIAL AND ARE NOT TO BE REPRODUCED OR COPIED IN WHOLE OR IN PART OR USED OR DISCLOSED TO OTHERS EXCEPT AS AUTHORIZED BY JELD-WEN INC.

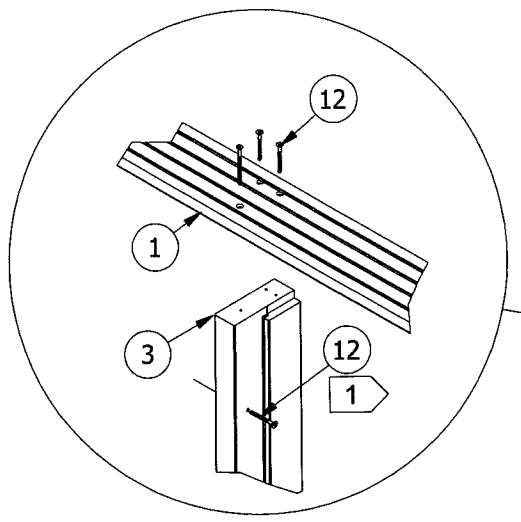

DETAIL A15
ATTACHMENT OF SOLID MULL POST
TO HEADER & MULL POST TO SIDELITE.
FOLLOW SAME SPACING
FOR ATTACHMENT OF MULLPOST TO SILL

DETAIL C15
ATTACHMENT OF DOUBLE BACK
MULL POSTS (JAMB STOCK) TO HEADER.

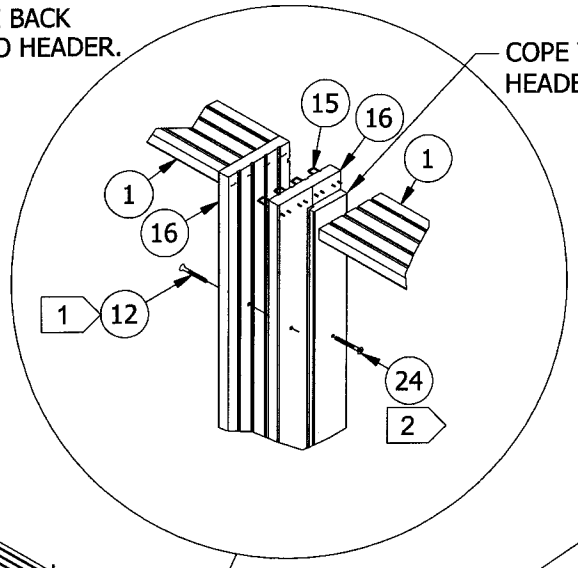

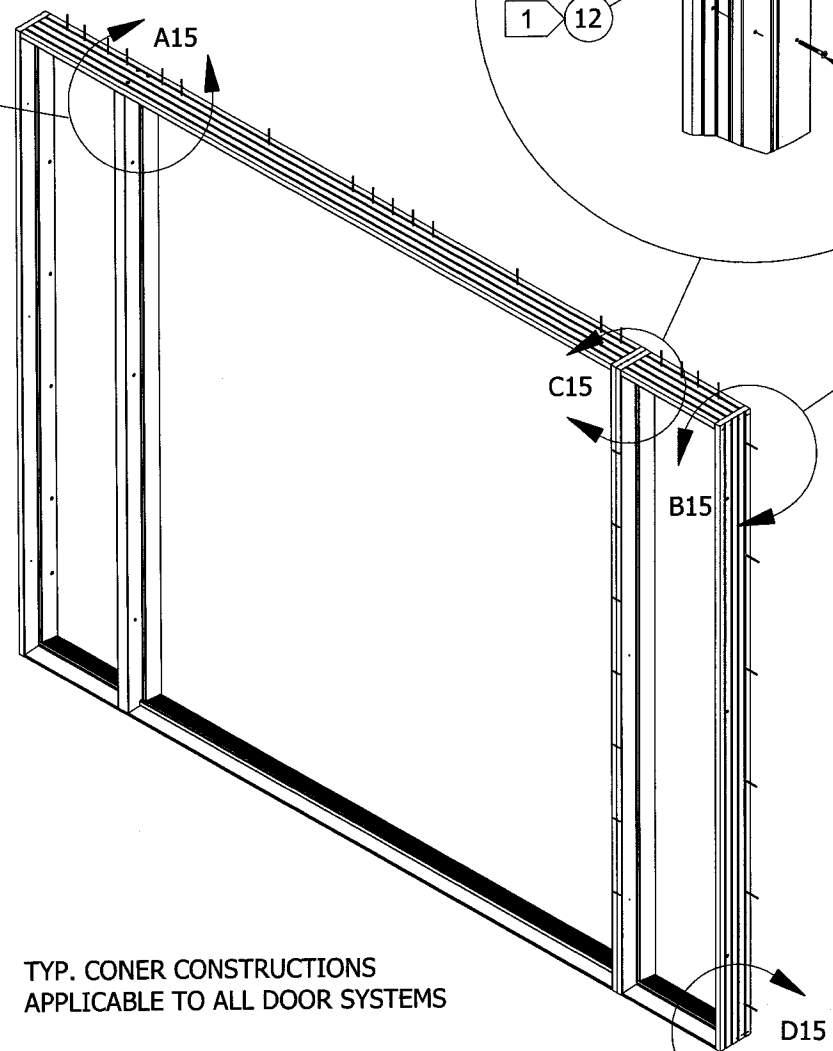

TYP. CONER CONSTRUCTIONS
APPLICABLE TO ALL DOOR SYSTEMS

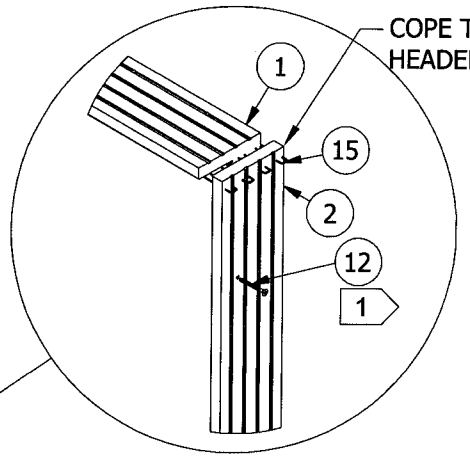

DETAIL B15
TYP. HEADER/JAMB
CORNER ASSEMBLY

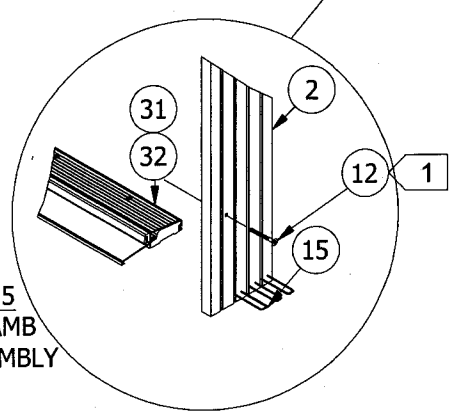

DETAIL D15
TYP. SILL/JAMB
CORNER ASSEMBLY

NOTES:

1. SPACING FOR SECURING SIDELITE/FIXED PANEL, ITEM #12 FROM TOP AND BOTTOM OF FRAME INWARD 6" AND ONE AT CENTERLINE.
2. DOUBLE BACK JAMB SCREW SPACING, ITEM #24 IS SHOWN ON SHEET 16.

JELD-WEN, inc.
Research and Development
3737 Lakeport Blvd.
Klamath Falls, Oregon 97601
Ph. (541) 882-3451
Fax (541) 850-2609

PRODUCT: DESIGN/SMOOTH PRO-PLUS FULL LITE DOOR
12-4 x 6-8
PART OR ASSEMBLY:
INSWING & OUTSWING FRAME
CORNER CONSTRUCTION

NO.	DATE	BY	REVISIONS

DATE: 01/11/2010
SCALE: NO SCALE
DWG. BY: G.LUBBECKE
CHK. BY: S. FREY
DRAWING NO.: JW012010
SHEET 15 OF 16

Kristina S. Daugherty
2-26-10
Kristina S. Daugherty
CertWorks LLC
Texas P.E. No. 104390
127 W. Fairbanks Ave. Ste. 438
Winter Park, FL. 32789

THIS DRAWING AND ITS CONTENTS ARE CONFIDENTIAL AND ARE NOT TO BE REPRODUCED OR COPIED IN WHOLE OR IN PART OR USED OR DISCLOSED TO OTHERS EXCEPT AS AUTHORIZED BY JELD-WEN INC.

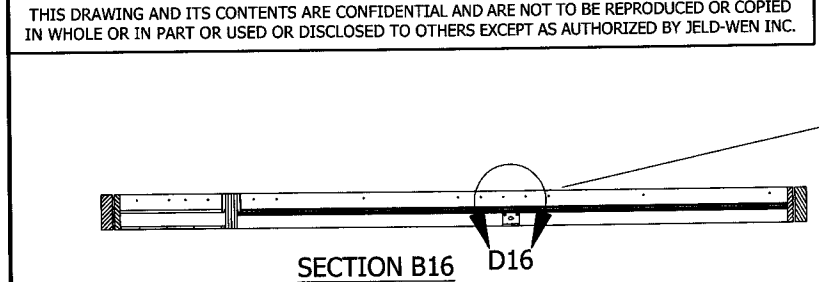

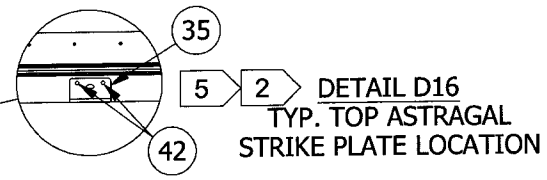

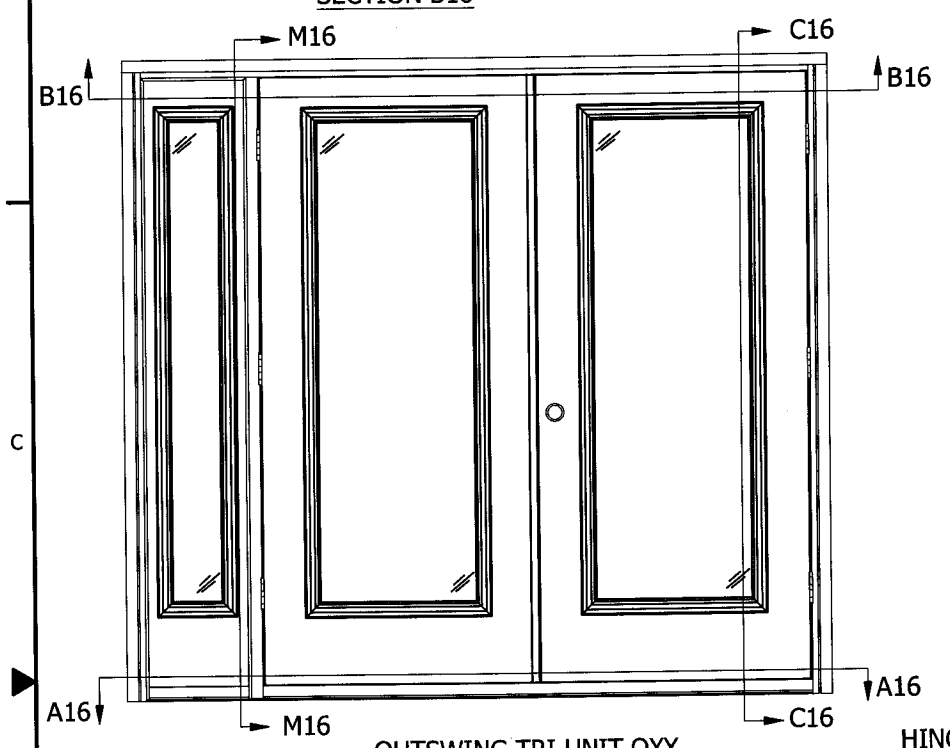

OUTSWING TRI UNIT OXX
TYP. FOR ALL
OUTSWING SYSTEMS

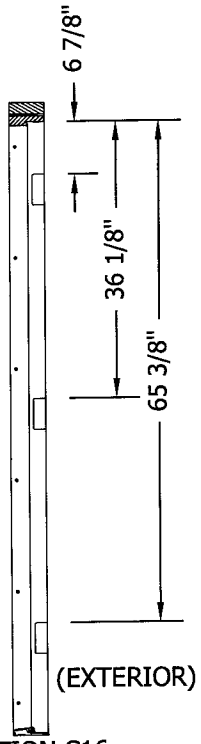

SECTION C16
HINGE ROUTE LOCATIONS
FOR OUTSWING DOORS
(MEASURED INSIDE OF JAMB)

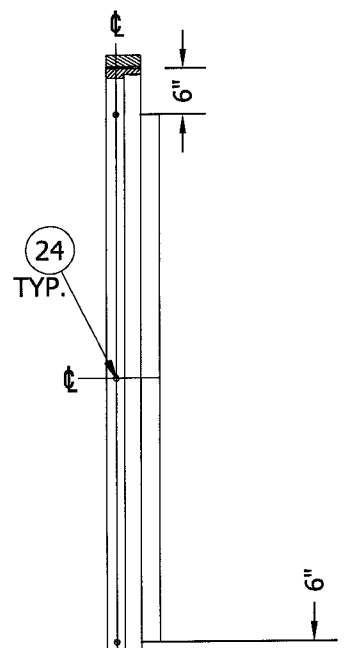

4 SECTION M16
DOUBLE BACK JAMB MULL
TIE-IN LOCATIONS

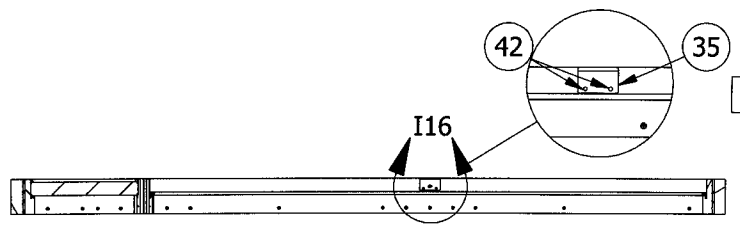

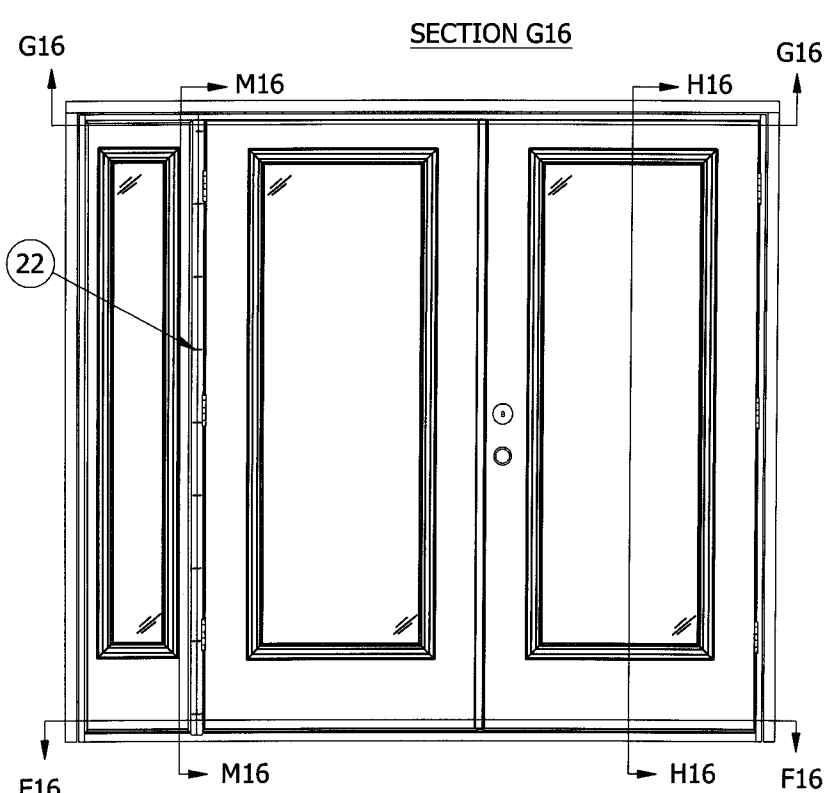

INSWING TRI UNIT OXX
TYP. FOR ALL
INSWING SYSTEMS

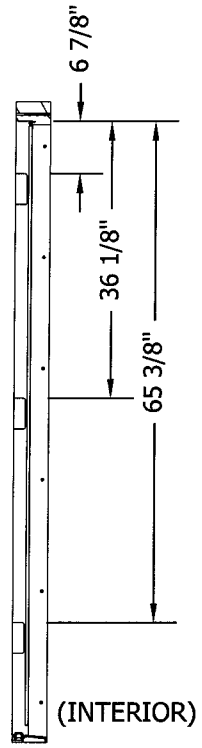

SECTION H16
HINGE ROUTE LOCATIONS
FOR INSWING DOORS
(MEASURED INSIDE OF JAMB)

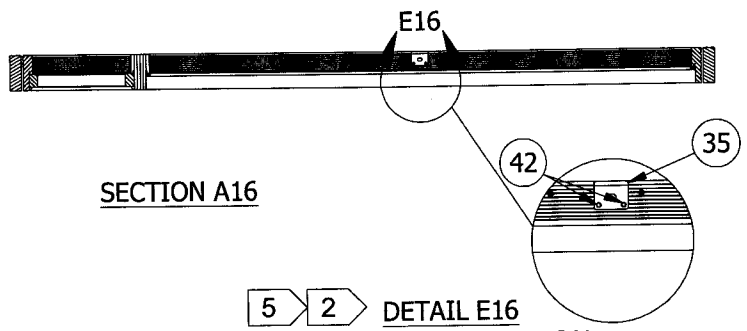

SECTION A16

5 2 DETAIL E16
TYP. BOTTOM ASTRAGAL
STRIKE PLATE LOCATION
FOR OUTSWING DOORS

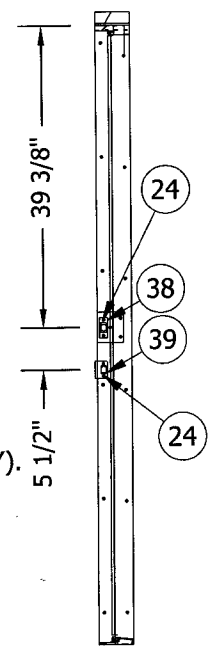

SECTION K16
DOOR STRIKE PLATE
LOCATIONS, ALL DOOR
SYSTEMS.

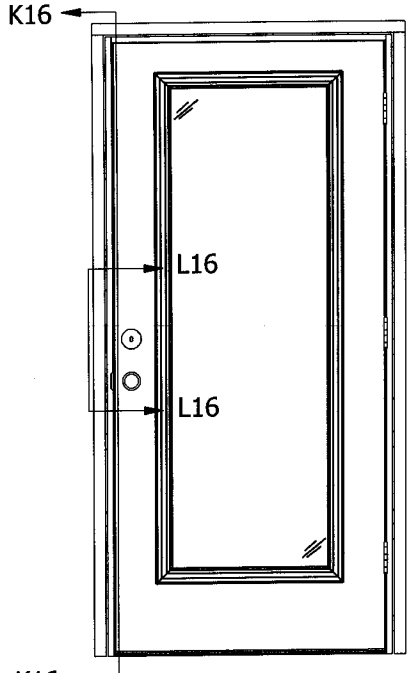

SINGLE UNIT X
TYP. FOR ALL
SINGLE DOOR
SYSTEMS

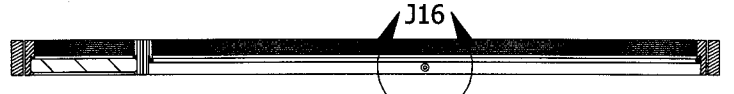

SECTION F16

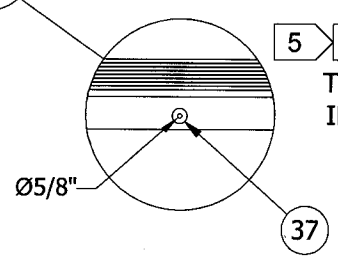

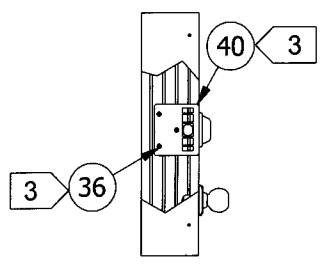

SECTION L16
BACKUP PLATE
BETWEEN LATCH
JAMB & BUCK

NOTES:

1. DRILL 5/8" HOLE MIN 1-3/8" DP FOR LOWER RETAINER (INSWING ONLY).
2. DRILL 3/8" HOLE MIN 1-3/8" DP FOR UPPER AND LOWER RETAINER.
3. SINGLE DOOR SYSTEMS ONLY.
4. INSTALL ITEM #24 IN CENTER OF THICK PART OF JAMB.
5. FOR EXACT LOCATION OF ASTRAGAL BOLT RETAINERS, FOLLOW MANUFACTURER'S RECOMMENDED INSTRUCTIONS SENT WITH HARDWARE.

JELD-WEN, inc.
Research and Development
3737 Lakeport Blvd.
Klamath Falls, Oregon 97601
Ph. (541) 882-3451
Fax (541) 850-2609

PRODUCT: DESIGN/SMOOTH PRO-PLUS FULL LITE DOOR
PART OR ASSEMBLY: 12-4 x 6-8
HINGE ROUTE, ASTRAGAL & LATCH STRIKE PLATE LOCATIONS

NO.	DATE	BY

REVISIONS

DATE: 01/11/2010
SCALE: NO SCALE
DWG. BY: G.LUBBECKE
CHK. BY: S. FREY
DRAWING NO.: JW012010
SHEET 16 OF 16

2-26-10
Kristina S. Daugherty
CertWorks LLC.
Texas P.E. No. 104390
127 W. Fairbanks Ave. Ste. 438
Winter Park, FL 32789