CREST DOORS, INC.

157 HUMBLE AVE. ~ SAN ANTONIO, TEXAS 78225

OPAQUE FIBERGLASS DOUBLE DOOR
w/ or w/o SIDELITES
INSWING / OUTSWING
"NON- IMPACT"

EVALUATED FOR USE IN THE STATE OF TEXAS

The Crest Fiberglass Door described herein complies with the 2006 International Residential Code (IRC), Sections R301 & R613 and the 2006 International Building Code (IBC), Sections 1405.12, 1609, 1714.5, 2403 and 2404 (including Texas revisions) subject to the following conditions:

1. Anchors shall be as listed and spaced as shown in the details. Anchor embedment to base material shall be beyond wall dressing or stucco.
2. When used in areas requiring wind-borne debris protection this product is required to be protected with an impact resistant covering that complies with Section R301.2.1.2 of the IRC and Section 1609.1.2 of the IBC.
3. Allowable design pressure requirements must be equal to or less than the design pressure rating shown in the design pressure chart, sheet 1 of this drawing.
4. Conditions not covered by this drawing are subject to further engineering analysis.

SUPPORTING DOCUMENTS & EVIDENCE

1. Testing per AAMA/WDMA/CSA 101/I.S.2/A440-05 :
   Testing Evaluation Laboratories, Inc. test report(s) #: TEL 01530200 & TEL 01530201.
2. Calculations (Anchoring and Glass load resistance report ASTM E1300-04) prepared by Lyndon F. Schmidt, P.E.
3. Certificate of Participation issued by the National Accreditation and Management Institute, Inc., certifying that Crest Doors, Inc. is manufacturing products within a Quality Assurance program.

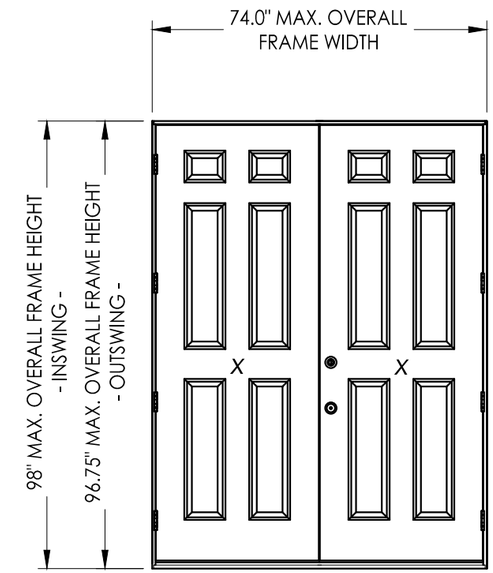

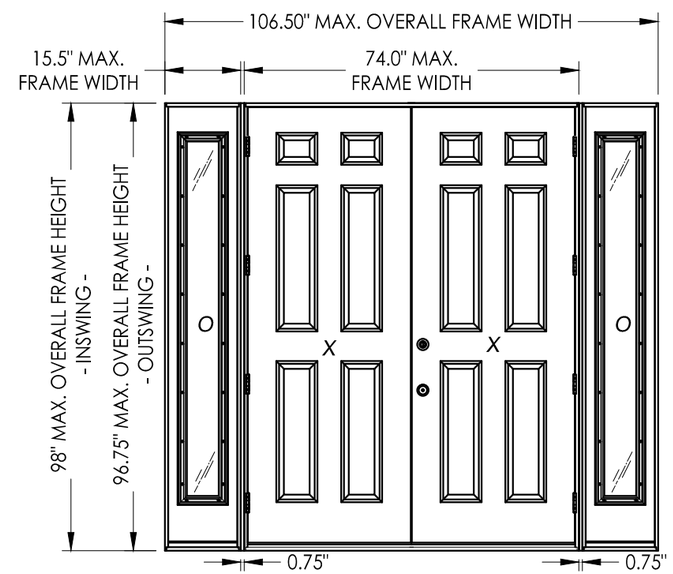

CONFIGURATION	MAX. FRAME DIMENSION	MAX. D.L.O. DIMENSION	DESIGN PRESSURE (PSF) INSWING		DESIGN PRESSURE (PSF) OUTSWING	
			POSITIVE	NEGATIVE	POSITIVE	NEGATIVE
XX	74.00" x 98.00"	N/A	+45.0	-55.0	+45.0	+45.0
OXXO	106.50" x 98.00"	7.0" x 79.87"	+45.0	-55.0	+45.0	+45.0

TABLE OF CONTENTS

SHEET#	DESCRIPTION
1	Typical elevations, design pressures & general notes
2	Door panel details
3	Sidelite panel details
4	Horizontal cross section
5	Vertical cross sections
6	Vertical cross sections
7	Frame anchoring
8	Glazing details
9	Astragal details
10	Bill of materials and components

Documents Prepared By: Lyndon F. Schmidt, P.E. TEXAS P.E. #104123
RW BUILDING CONSULTANTS, INC.
P.O. Box 230 Valrico FL. 33595
Phone No.: 813.659.9197
TEXAS BOARD OF PROFESSIONAL ENGINEERS CERTIFICATE OF REGISTRATION # F-11852

PRODUCT: CREST FIBERGLASS DOOR

PART OR ASSEMBLY: TYPICAL ELEVATION, DESIGN PRESSURES & GENERAL NOTES

NO.	DATE	REVISIONS	BY

DATE: 5/19/10
SCALE: N.T.S.
DWG. BY: JK
CHK. BY: LFS
DRAWING NO.: TX-4095
SHEET 1 OF 10

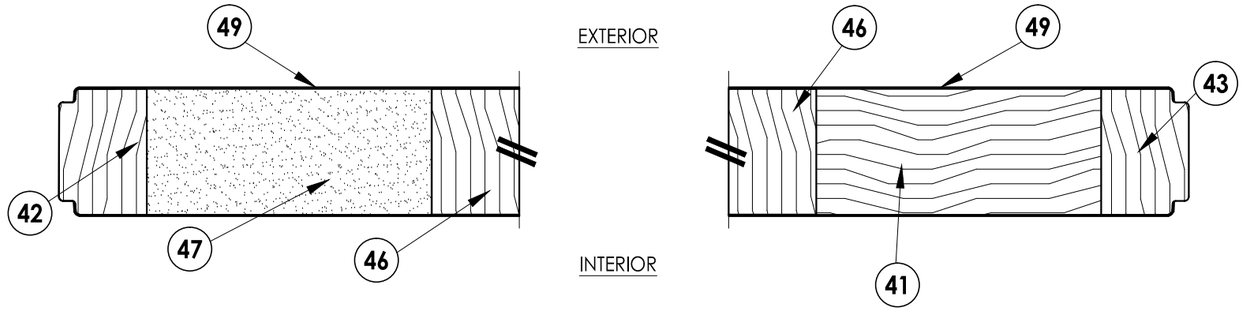

1/2 **HORIZONTAL CROSS SECTION**

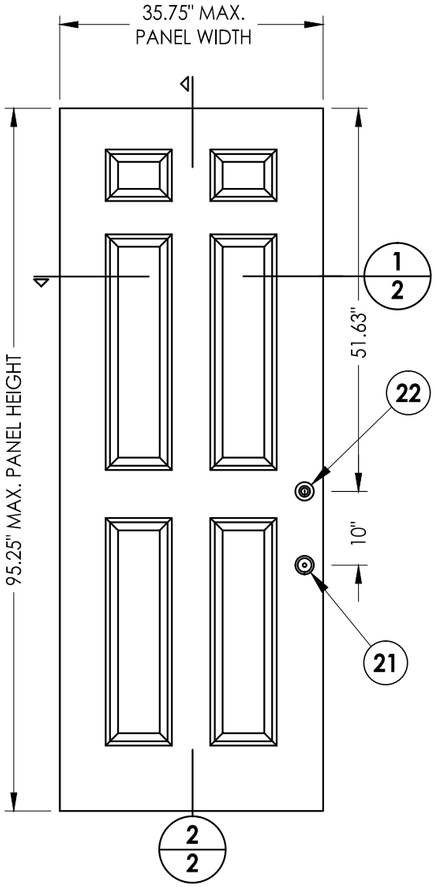

40 **DOOR PANEL**
Fiberglass

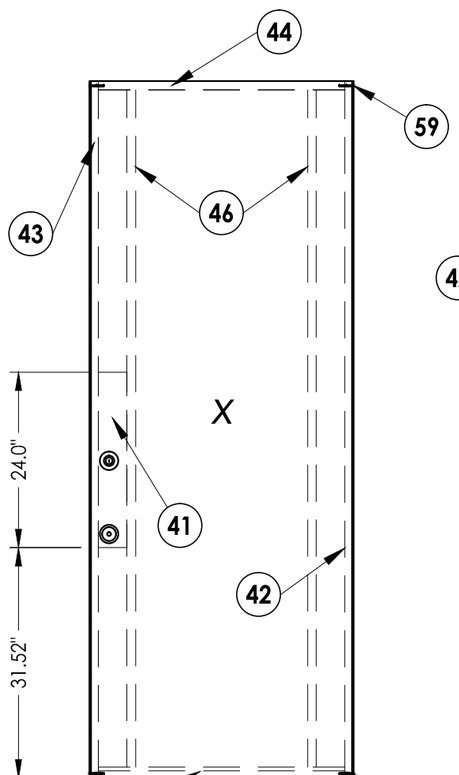

40 **DOOR PANEL**
Fiberglass
SHOWN w/o FACE SKIN
FOR CLARITY

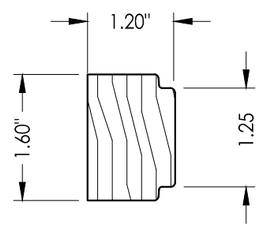

42 43 **HINGE AND LATCH STILE**
Wood

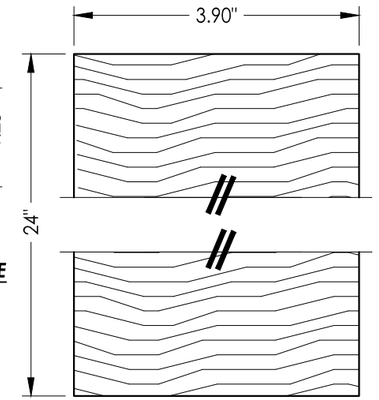

41 **LOCK BLOCK**
Wood

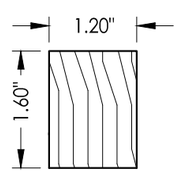

46 **LITE FRAME REINFORCMENT**
Wood

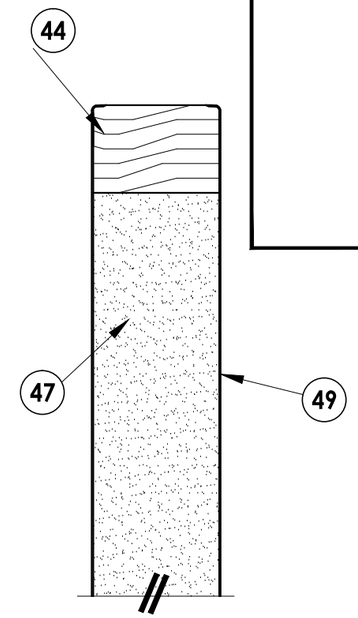

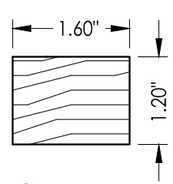

44 **TOP RAIL**
Wood

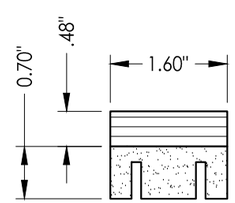

45 **BOTTOM RAIL**
Composite / LVL

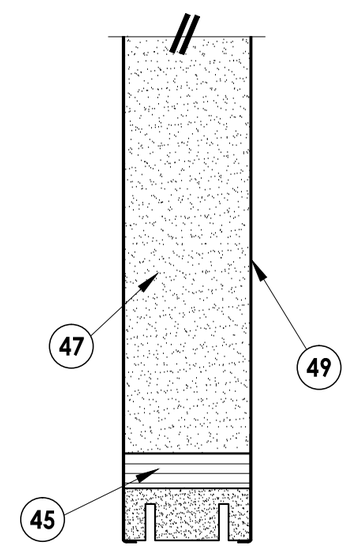

2/2 **VERTICAL CROSS SECTION**

Documents Prepared By: Lyndon F. Schmidt, P.E.
TEXAS P.E. #104123

RW BUILDING CONSULTANTS, INC.
P.O. Box 230 Valrico FL. 33595
Phone No.: 813.659.9197

TEXAS BOARD OF PROFESSIONAL ENGINEERS
CERTIFICATE OF REGISTRATION # F-11852

PRODUCT: CREST FIBERGLASS DOOR

PART OR ASSEMBLY: DOOR PANEL DETAILS

NO.	DATE	REVISIONS	BY

DATE: 5/19/10
SCALE: N.T.S.
DWG. BY: JK
CHK. BY: LFS
DRAWING NO.: TX-4095
SHEET 2 OF 10

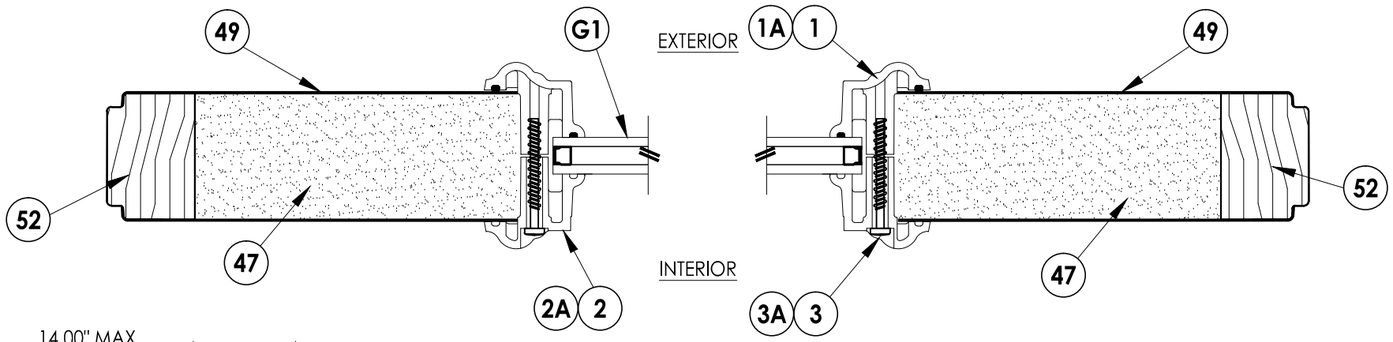

1/3 **HORIZONTAL CROSS SECTION**

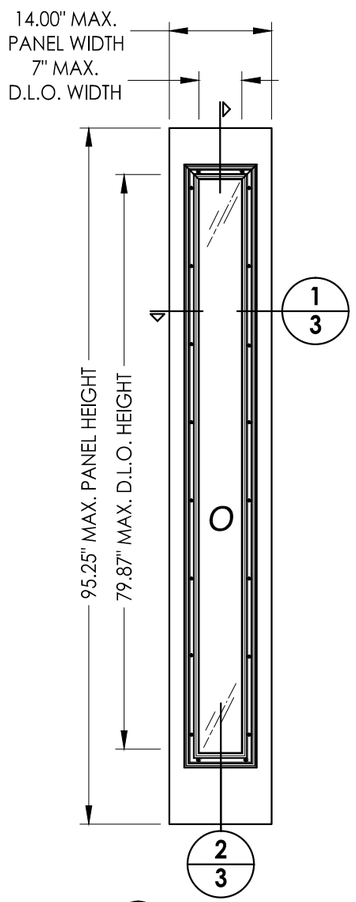

50 **SIDELITE PANEL**
Fiberglass

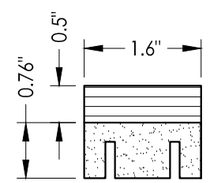

53 **SIDELITE BOTTOM RAIL**

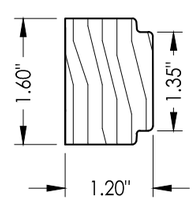

52 **SIDELITE STILE**
Wood

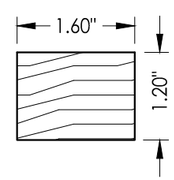

54 **SIDELITE TOP RAIL**
Wood

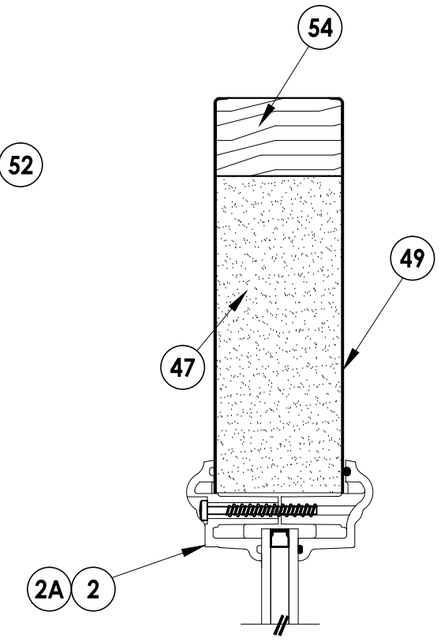

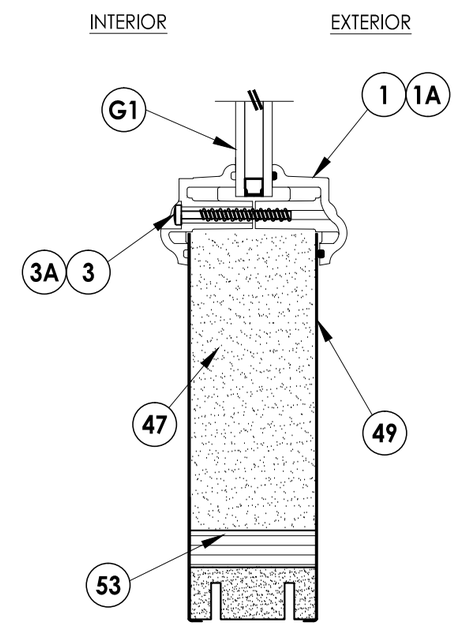

2/3 **VERTICAL CROSS SECTION**

ODL LITE FRAME SCREWS (Item #3):
HEAD/SILL (2 total), 2" from corners
JAMBS: (8 total), 6.5" from corners & 10" max. o.c.

RSL SIDELITE FRAME SCREWS (Item #3A):
HEAD/SILL (2 total), 2" from corners
JAMBS: (8 total), 3.25" from corners & 10.75" max. o.c.

Documents Prepared By: Lyndon F. Schmidt, P.E.
TEXAS P.E. #104123
RW BUILDING CONSULTANTS, INC.
P.O. Box 230 Valrico FL. 33595
Phone No.: 813.659.9197
TEXAS BOARD OF PROFESSIONAL ENGINEERS
CERTIFICATE OF REGISTRATION # F-11852

PRODUCT: CREST FIBERGLASS DOOR

PART OR ASSEMBLY: SIDELITE PANEL DETAILS

NO.	DATE	REVISIONS	BY

DATE: 5/19/10
SCALE: N.T.S.
DWG. BY: JK
CHK. BY: LFS
DRAWING NO.: TX-4095
SHEET 3 OF 10

© 2010 R.W. Building Consultants Inc.

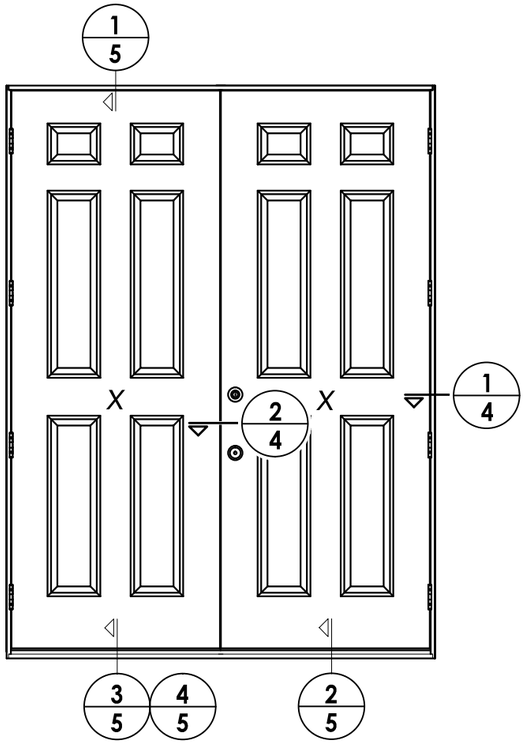

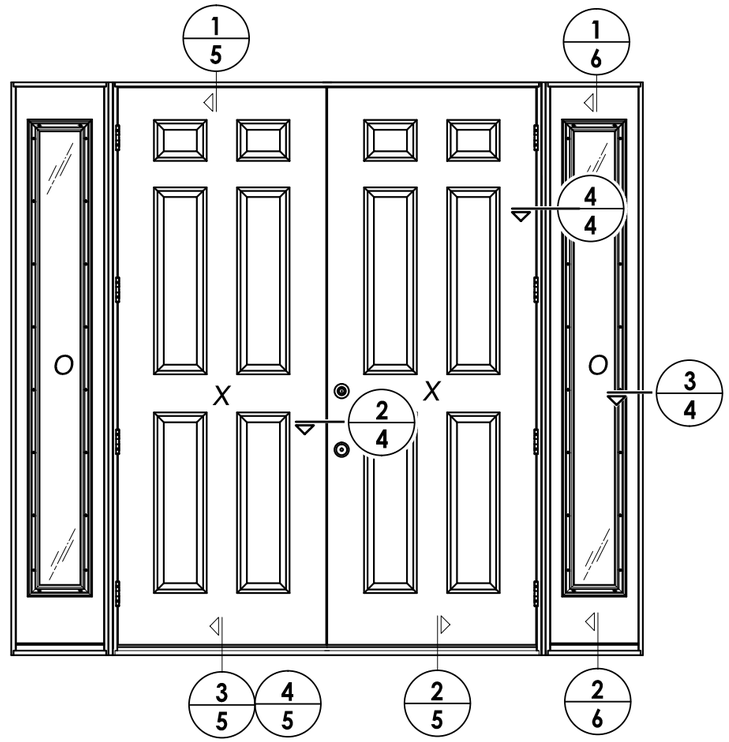

NOTE:

1. Sidelite ass'y fastener; 6" from each end and 6 more screws equally spaced between. (8 screws total per jamb.)

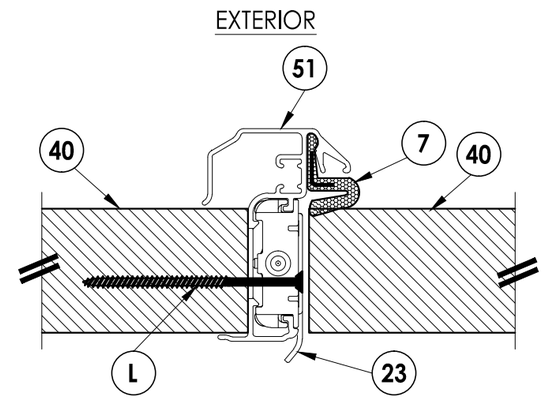

2/4 **HORIZONTAL CROSS SECTION**
Inswing shown - outswing also approved

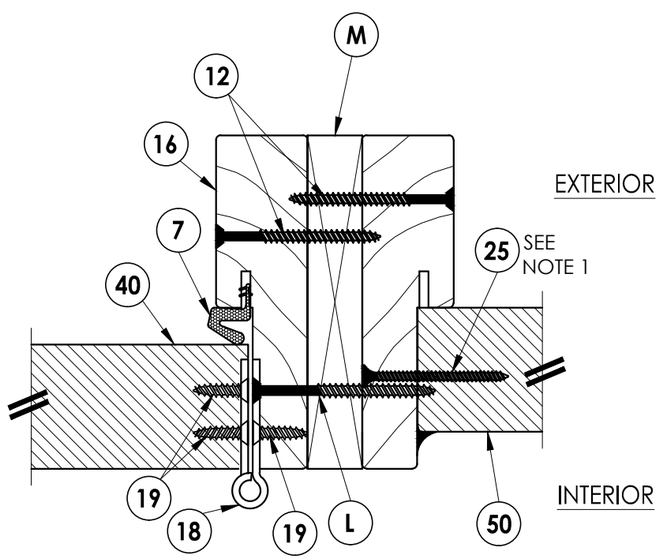

4/4 **HORIZONTAL CROSS SECTION**
Inswing shown - outswing also approved

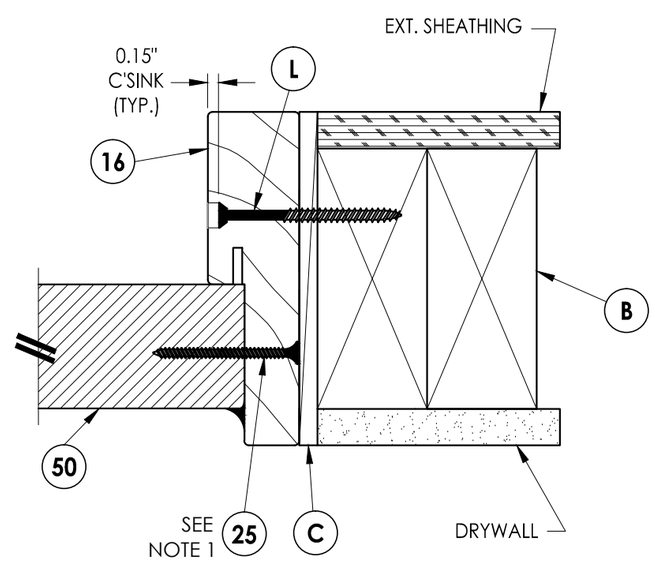

3/4 **HORIZONTAL CROSS SECTION**
Inswing shown - outswing also approved

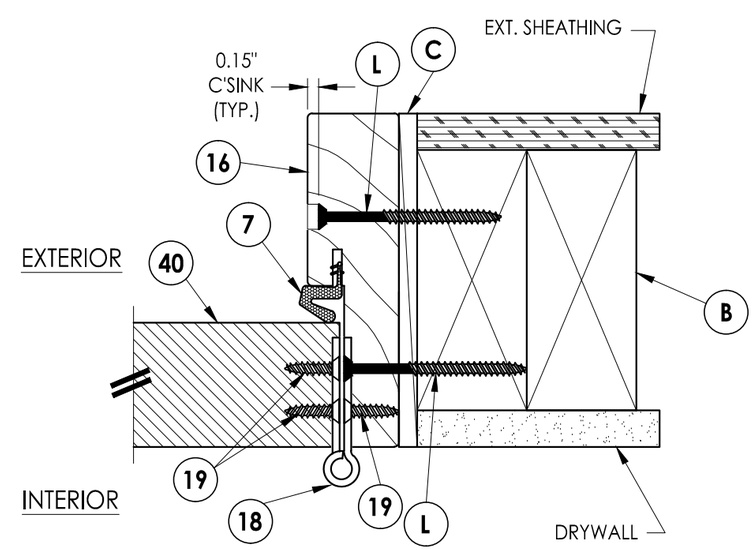

1/4 **HORIZONTAL CROSS SECTION**
Inswing shown - outswing also approved

Documents Prepared By: Lyndon F. Schmidt, P.E.
TEXAS P.E. #104123
RW BUILDING CONSULTANTS, INC.
P.O. Box 230 Valrico FL. 33595
Phone No.: 813.659.9197
TEXAS BOARD OF PROFESSIONAL ENGINEERS
CERTIFICATE OF REGISTRATION # F-11852

PRODUCT: CREST FIBERGLASS DOOR

PART OR ASSEMBLY: HORIZONTAL CROSS SECTIONS

NO.	DATE	BY

REVISIONS

DATE: 5/19/10
SCALE: N.T.S.
DWG. BY: JK
CHK. BY: LFS
DRAWING NO.: TX-4095
SHEET 4 OF 10

© 2010 R.W. Building Consultants Inc.

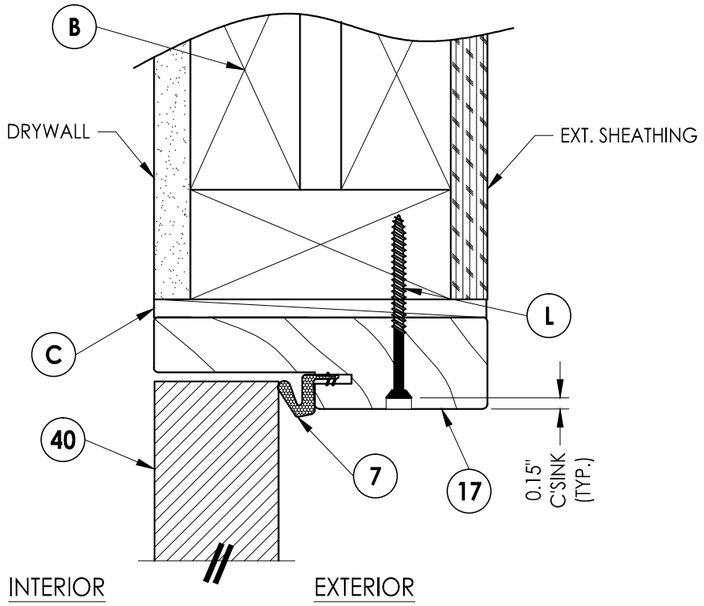

1/5 **VERTICAL CROSS SECTION**
Inswing shown - outswing also approved

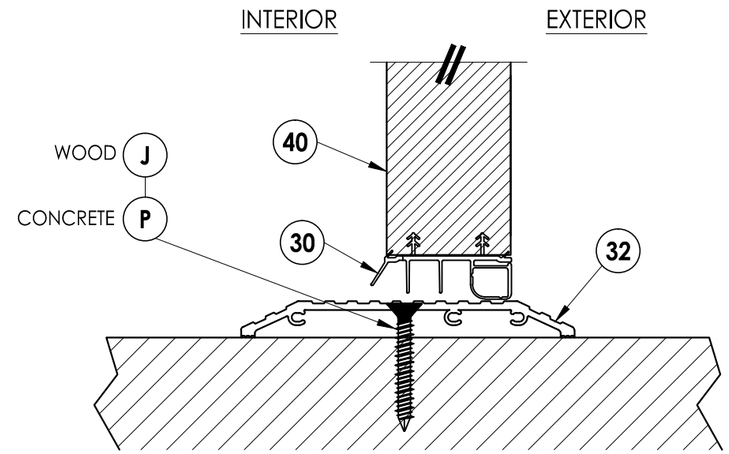

2/5 **VERTICAL CROSS SECTION**
Shown w/ ADA threshold

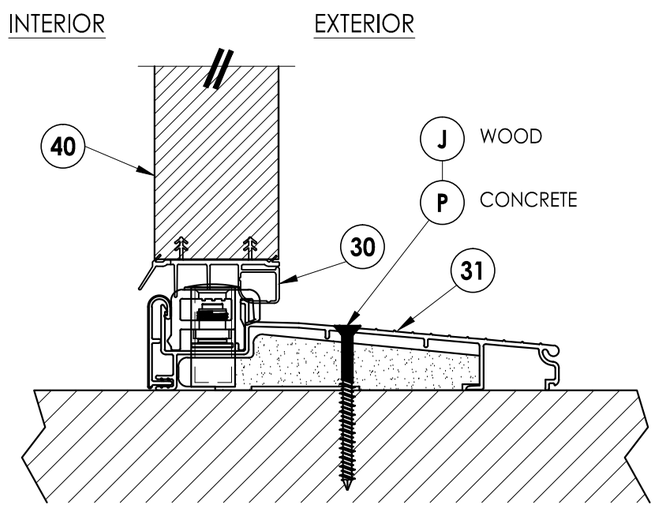

3/5 **VERTICAL CROSS SECTION**
Inswing configuration

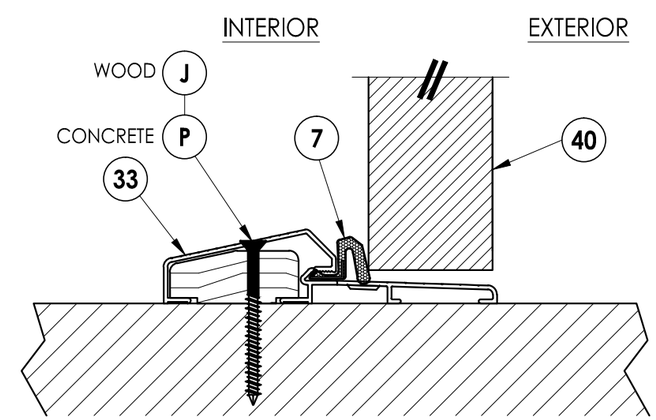

4/5 **VERTICAL CROSS SECTION**
Outswing configuration

Documents Prepared By: Lyndon F. Schmidt, P.E. TEXAS P.E. #104123

RW BUILDING CONSULTANTS, INC.
P.O. Box 230 Valrico FL. 33595
Phone No.: 813.659.9197

TEXAS BOARD OF PROFESSIONAL ENGINEERS CERTIFICATE OF REGISTRATION # F-11852

PRODUCT: CREST FIBERGLASS DOOR

PART OR ASSEMBLY: VERTICAL CROSS SECTIONS

NO.	DATE	REVISIONS	BY

DATE: 5/19/10
SCALE: N.T.S.
DWG. BY: JK
CHK. BY: LFS
DRAWING NO.: TX-4095
SHEET 5 OF 10

© 2010 R.W. BUILDING CONSULTANTS INC.

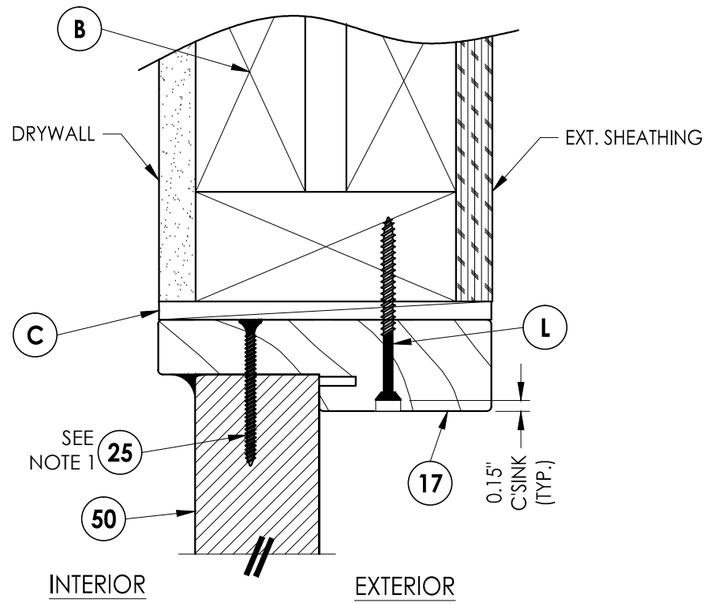

1/6 **VERTICAL CROSS SECTION**
Inswing shown - outswing also approved

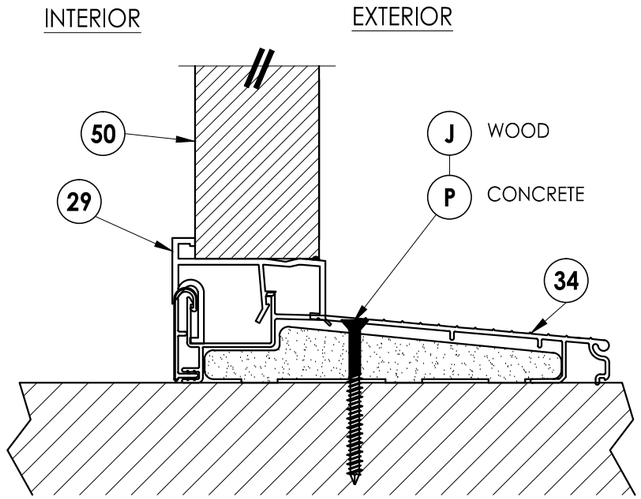

3/6 **VERTICAL CROSS SECTION**
Inswing configuration

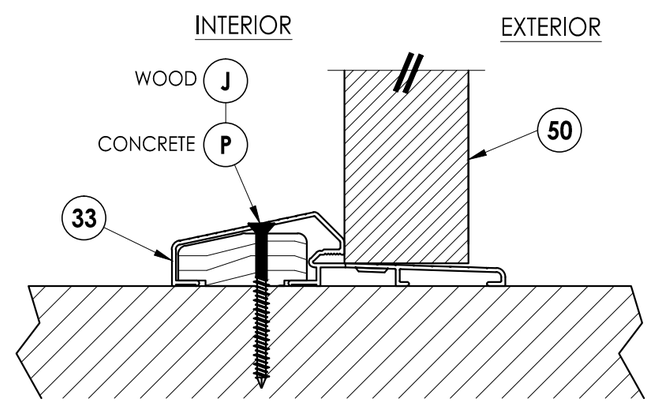

2/6 **VERTICAL CROSS SECTION**
Outswing configuration

NOTE:

1. Screws thru head and sill jamb located 3" from each end.

Documents Prepared By: Lyndon F. Schmidt, P.E.
TEXAS P.E. #104123

RW BUILDING CONSULTANTS, INC.
P.O. Box 230 Valrico FL. 33595
Phone No.: 813.659.9197

TEXAS BOARD OF PROFESSIONAL ENGINEERS
CERTIFICATE OF REGISTRATION # F-11852

PRODUCT: *CREST FIBERGLASS DOOR*

PART OR ASSEMBLY: *VERTICAL CROSS SECTIONS*

NO.	DATE	REVISIONS	BY

DATE: 5/19/10
SCALE: N.T.S.
DWG. BY: JK
CHK. BY: LFS
DRAWING NO.: TX-4095
SHEET 6 OF 10

© 2010 R.W. BUILDING CONSULTANTS INC.

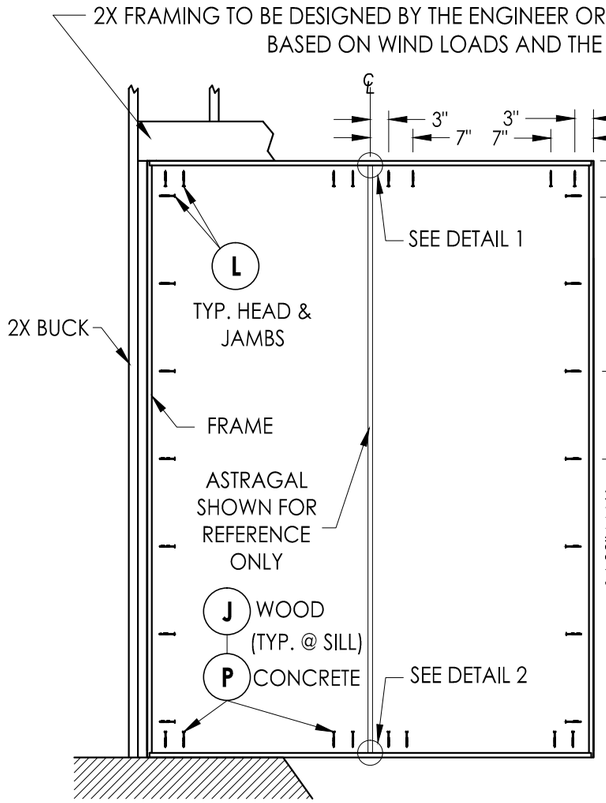

FRAME ANCHORING
(XX)

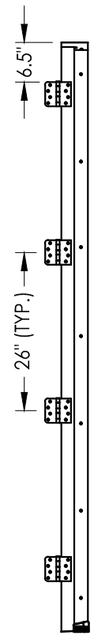

HINGE JAMB

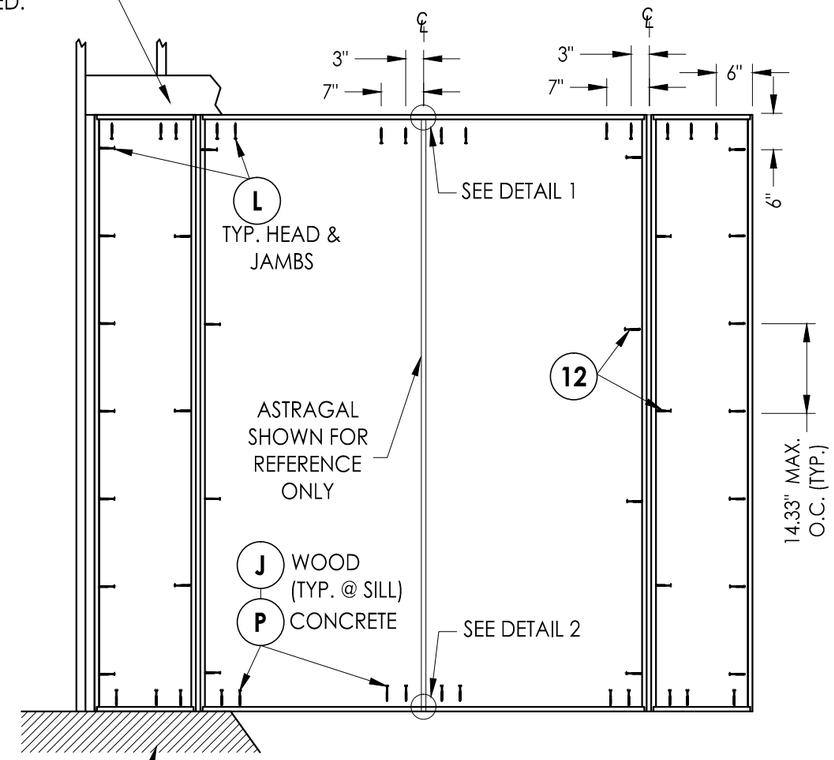

FRAME ANCHORING
(OXXO)

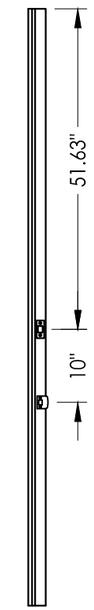

ASTRAGAL

FLOOR SUBSTRATE MATERIAL
CONCRETE (MIN. 3000 PSI)
WOOD (S.G. >= 0.42)(TYP)

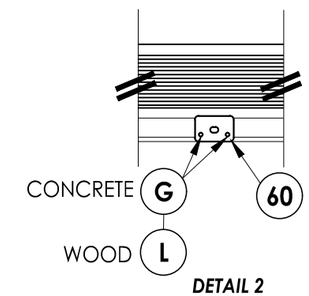

DETAIL 2
Astragal Strike Plate
Inswing

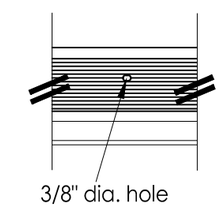

DETAIL 2
Astragal Strike Plate
Outswing

CONCRETE ANCHOR NOTES:

1. *Substitution of equal concrete anchors from a different supplier may have different edge distance and center distance requirements.*
2. *Concrete anchor locations at the corners may be adjusted to maintain the min. edge distance to mortar joints. Concrete anchor locations noted as "MAX. ON CENTER" must be adjusted to maintain the min. edge distance to mortar joints, additional concrete anchors may be required to ensure the "MAX. ON CENTER" dimension are not exceeded.*
3. *Concrete anchor table:*

ANCHOR TYPE	ANCHOR SIZE	MIN. EMBEDMENT	MIN. CLEARANCE TO MASONRY EDGE	MIN. CLEARANCE TO ADJACENT ANCHOR
ITW	1/4"	1-1/4"	2-1/2"	3"
ELCO	1/4"	1-1/4"	1"	4"
ITW	3/16"	1-1/4"	2-5/8"	2-1/4"

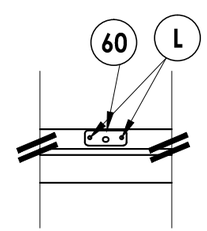

DETAIL 1
Astragal Strike Plate

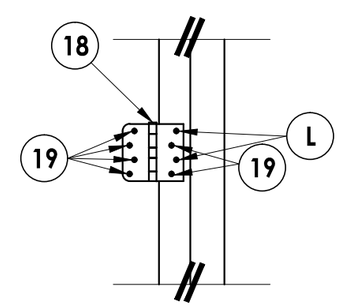

HINGE DETAIL

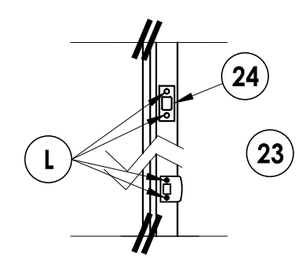

LATCH & DEADBOLT DETAIL
w/ Standard Strike

Documents Prepared By: Lyndon F. Schmidt, P.E.
TEXAS P.E. #104123
RW BUILDING CONSULTANTS, INC.
P.O. Box 230 Valrico FL. 33595
Phone No.: 813.659.9197
TEXAS BOARD OF PROFESSIONAL ENGINEERS
CERTIFICATE OF REGISTRATION # F-11852

PRODUCT: *CREST FIBERGLASS DOOR*

PART OR ASSEMBLY: *FRAME ANCHORING*

REVISIONS

NO.	DATE	BY

DATE: 5/19/10
SCALE: N.T.S.
DWG. BY: JK
CHK. BY: LFS
DRAWING NO.: TX-4095
SHEET 7 OF 10

© 2010 R.W. Building Consultants Inc.

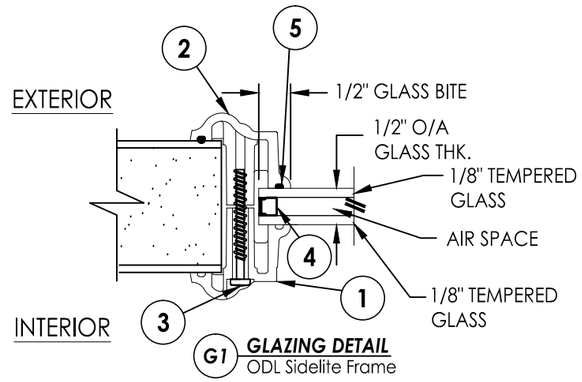

G1 **GLAZING DETAIL**
ODL Sidelite Frame

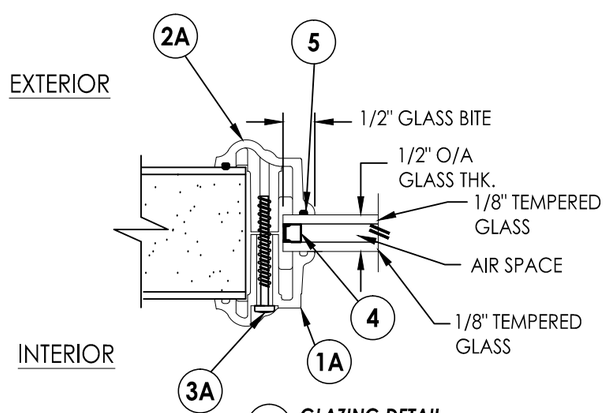

G1 **GLAZING DETAIL**
RSL Door Frame

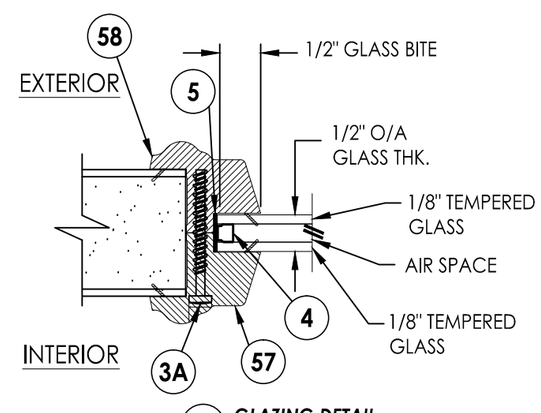

G1 **GLAZING DETAIL**
RSL Sidelite Frame

Documents Prepared By: Lyndon F. Schmidt, P.E.
TEXAS P.E. #104123

R.W. BUILDING CONSULTANTS, INC.
P.O. Box 230 Valrico FL. 33595
Phone No.: 813.659.9197

TEXAS BOARD OF PROFESSIONAL ENGINEERS
CERTIFICATE OF REGISTRATION # F-11852

PRODUCT: CREST FIBERGLASS DOOR

PART OR ASSEMBLY: GLAZING DETAILS

NO.	DATE	REVISIONS	BY

DATE: 5/19/10
SCALE: N.T.S.
DWG. BY: JK
CHK. BY: LFS
DRAWING NO.: TX-4095
SHEET 8 OF 10

© 2010 R.W. Building Consultants Inc.

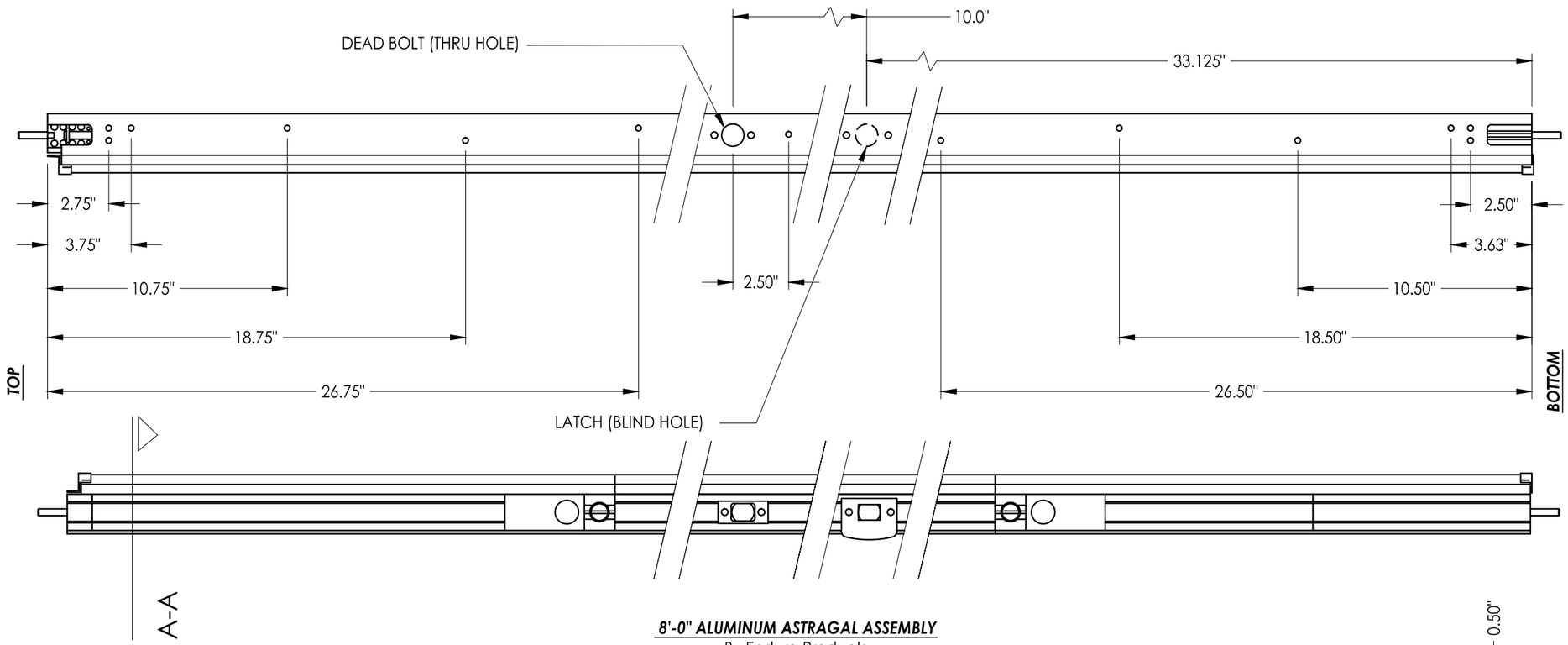

8'-0" ALUMINUM ASTRAGAL ASSEMBLY
By Endura Products

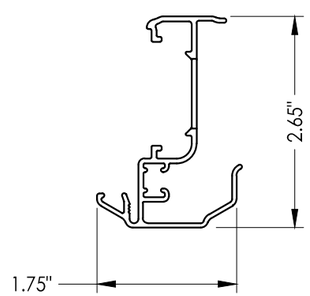

51 ALUMINUM ASTRAGAL
By Endura Products

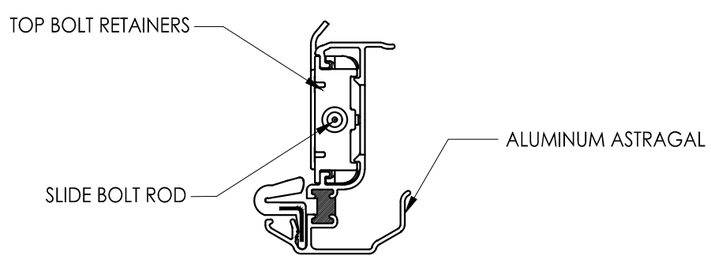

VIEW A-A
Aluminum Astragal Assembly

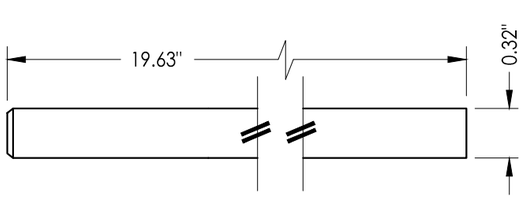

SLIDE BOLT ROD
MATL: Steel

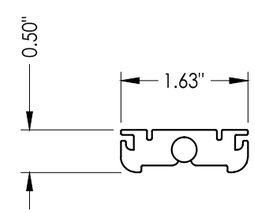

TOP BOLT RETAINER
MATL: 9-3/4" Aluminum

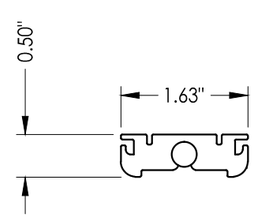

TOP BOLT RETAINER
MATL: 4-3/4" Aluminum

Documents Prepared By: Lyndon F. Schmidt, P.E.
TEXAS P.E. #104123
RW BUILDING CONSULTANTS, INC.
P.O. Box 230 Valrico FL. 33595
Phone No.: 813.659.9197
TEXAS BOARD OF PROFESSIONAL ENGINEERS
CERTIFICATE OF REGISTRATION # F-11852

PRODUCT: CREST FIBERGLASS DOOR
PART OR ASSEMBLY: ASTRAGAL DETAILS

NO.	DATE	REVISIONS	BY

DATE: 05/19/10
SCALE: N.T.S.
DWG. BY: JK
CHK. BY: LFS
DRAWING NO.: TX-4095
SHEET 9 OF 10

© 2010 R.W. Building Consultants Inc.

BILL OF MATERIALS

ITEM #	DESCRIPTION	MATERIAL
B	2X FRAMING SG >= 0.55	WOOD
C	1/4" MAX. SHIM SPACE	-
G	3/16" X 3-1/4" PFH ITW CONCRETE SCREW	STEEL
J	#10 X 3" PFH WOOD SCREW	STEEL
L	#10 X 2-1/2" PFH WOOD SCREW	STEEL
M	1X OR 2X REINFORCEMENT SG >= 0.55	STEEL
P	1/4" PFH ELCO OR ITW CONCRETE SCREW (1-3/4" MIN. EMB.)	STEEL
1	FEMALE LITE FRAME - ODL	POLYPROPYLENE
1A	FEMALE LITE FRAME - RSL	POLYPROPYLENE
2	MALE LITE FRAME - ODL	POLYPROPYLENE
2A	MALE LITE FRAME - RSL	POLYPROPYLENE
3	#8 X 1-3/4" PANHEAD SMS (LIGHT FRAME SCREW)	STEEL
3A	#8 X 1-1/2" PANHEAD SMS (LIGHT FRAME SCREW)	STEEL
4	ALUMINUM SPACER SYSTEM	ALUMINUM
5	HOT MELT SEALANT / SILICONE	SILICONE
7	WEATHER STRIP	FOAM
12	#10 X 2-1/4" PFH SCREW	STEEL
16	SIDE JAMB SG > = 0.42	WOOD
17	HEAD JAMB SG > = 0.42	WOOD
18	4" X 4" HINGE MIN 0.1" THICK	STEEL
19	#10 X 3/4" PFH WS	STEEL
20	#10 X 2-1/2" PFH SCREW	STEEL
21	KWIKSET LOCK -SERIES 690 CP PASSAGE	STEEL
22	KWIKSET DEADBOLT -SERIES 690 CP	STEEL
23	LATCH STRIKEPLATE	STEEL
24	DEADBOLT STRIKE PLATE	STEEL
25	#8 X 2-1/2" PFH WOOD SCREW	STEEL
29	SIDELITE SPACER	VINYL
30	DOOR BOTTOM SWEEP	PVC
31	INSWING THRESHOLD	ALUM/COMP.
32	ADA THRESHOLD	ALUM.
33	OUTSWING THRESHOLD	ALUM./WOOD
34	SIDELITE THRESHOLD	ALUM./COMP.
40	DOOR PANEL - SEE DOOR PANEL DETAIL SHEET FOR CONSTRUCTION DETAILS	-
41	WOOD LOCK BLOCK	WOOD
42	HINGE STILE - SG >= 0.42	WOOD
43	LATCH STILE - SG >= 0.42	WOOD
44	TOP RAIL SG > = 0.42	WOOD
45	BOTTOM RAIL	COMP./LVL
46	FRAME REINFORCEMENT SG > = 0.42	WOOD
47	POLYSTYRENE FOAM	POLYSTYRENE
49	FIBERGLASS SKIN 0.08" MIN. THICKNESS	FIBERGLASS
50	SIDELITE PANEL - SEE SIDELITE PANEL DETAIL SHEET FOR CONSTRUCTION DETAILS	-
51	ALUMINUM ASTRAGAL	ALUM
52	SIDELITE STILE - SG>= 0.42	WOOD
53	SIDELITE BOTTOM RAIL	COMP./LVL
54	SIDELITE TOP RAIL	WOOD
57	SIDELITE FEMALE LITE FRAME - RSL	PVC
58	SIDELITE MALE LITE FRAME - RSL	PVC
59	#8 X 2" PFH WOOD SCREW	STEEL
60	ASTRAGAL STRIKE PLATE	STEEL

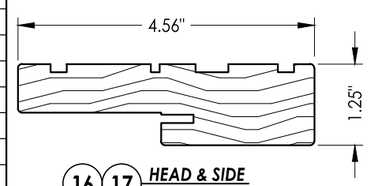

16 17 HEAD & SIDE Jamb

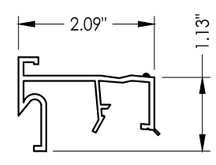

29 SIDELITE SPACER

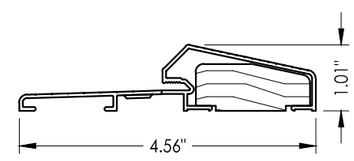

33 OUTSWING THRESHOLD

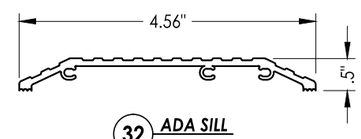

32 ADA SILL

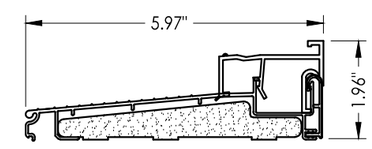

34 SIDELITE THRESHOLD

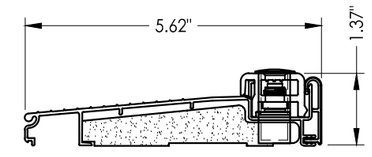

31 INSWING THRESHOLD

Documents Prepared By: Lyndon F. Schmidt, P.E.
TEXAS P.E. #104123

RW BUILDING CONSULTANTS, INC.
P.O. Box 230 Valrico FL. 33595
Phone No.: 813.659.9197

TEXAS BOARD OF PROFESSIONAL ENGINEERS
CERTIFICATE OF REGISTRATION # F-11852

PRODUCT: CREST FIBERGLASS DOOR

PART OR ASSEMBLY: BILL OF MATERIALS & COMPONENTS

NO.	DATE	REVISIONS	BY

DATE: 5/19/10
SCALE: N.T.S.
DWG. BY: JK
CHK. BY: LFS
DRAWING NO.: TX-4095
SHEET 10 OF 10

© 2010 R.W. Building Consultants Inc.