REVISIONS			
REV	DESCRIPTION	DATE	APPROVED
A	REMOVED FLAP SEAL OPTION	07/12/11	R.L.

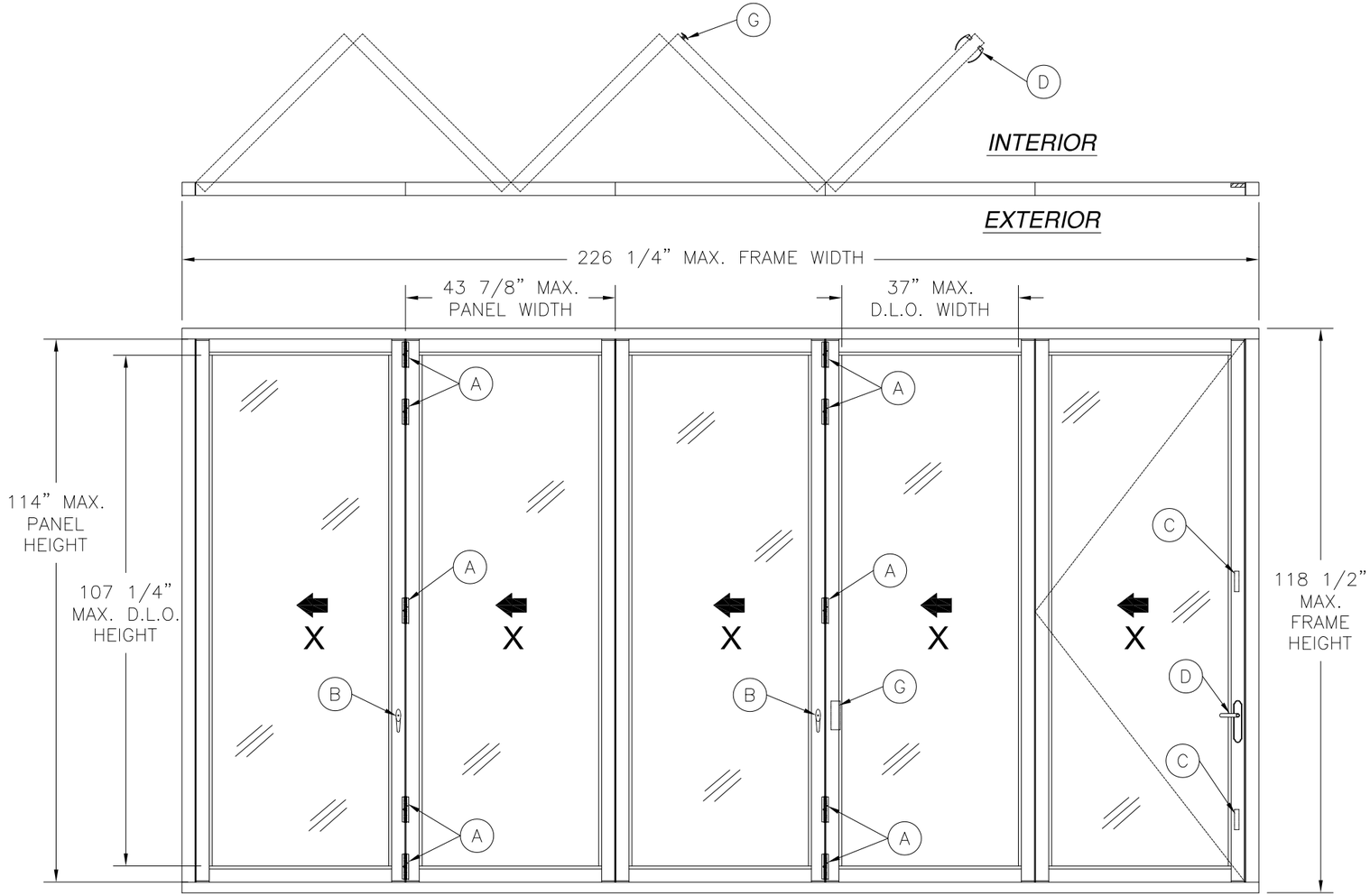

3300 THERMALLY BROKEN ALUMINUM INFOLDING GLASS WALL

EXTERIOR VIEW

DESIGN PRESSURE RATING	*IMPACT RATING*
+ 50.0 PSF *- 60.0 PSF*	*LARGE AND SMALL MISSILE IMPACT*

WITH STANDARD SILL AND BULB SEAL, SEE SILL OPTION 2 SHEET 4

NOTES:

1) THE PRODUCT SHOWN HEREIN IS DESIGNED AND MANUFACTURED TO COMPLY WITH REQUIREMENTS OF THE 2006 INTERNATIONAL BUILDING CODE AND 2006 INTERNATIONAL RESIDENTIAL CODE WITH TEXAS STATE MODIFICATIONS.
2) WOOD FRAMING AND MASONRY OPENING TO BE DESIGNED AND ANCHORED TO PROPERLY TRANSFER ALL LOADS TO STRUCTURE. FRAMING AND MASONRY OPENING IS THE RESPONSIBILITY OF THE ARCHITECT OR ENGINEER OF RECORD.
3) 1X BUCK OVER MASONRY/CONCRETE IS OPTIONAL. WHERE 1X BUCK IS NOT USED DISSIMILAR MATERIALS MUST BE SEPARATED WITH APPROVED COATING OR MEMBRANE. SELECTION OF COATING OR MEMBRANE IS THE RESPONSIBILITY OF THE ARCHITECT OR ENGINEER OF RECORD.
4) FRAME AND PANEL MATERIAL: THERMALLY BROKEN 6063–T6 ALUMINUM ALLOY .125" THICK.
5) APPROVED IMPACT PROTECTIVE SYSTEM IS NOT REQUIRED FOR THIS PRODUCT IN WIND BORNE DEBRIS REGIONS.
6) UNITS MUST BE GLAZED PER ASTM E1300. SEE SHEET 4 FOR APPROVED GLASS TYPES.
7) ALLOWABLE STRESS INCREASE OF 1/3 WAS NOT USED IN THE DESIGN OF THE PRODUCT SHOWN HEREIN. WIND LOAD DURATION FACTOR Cd=1.6 WAS USED FOR WOOD ANCHOR CALCULATIONS.
8) APPROVED CONFIGURATIONS: X, XX, XXX, XXXX, XXXXX INFOLD AND OUTFOLD.

SIGNED: 07/11/2011

TABLE OF CONTENTS

SHEET NO.	DESCRIPTION
1	INFOLD ELEVATION AND NOTES
2	OUTFOLD ELEVATION AND HARDWARE SCHEDULE
3	ANCHORING LAYOUT, DEATILS AND NOTES
4	SILL OPTIONS AND GLAZING DETAILS
5 – 8	INSTALLATION DETAILS

SOLAR INNOVATIONS, INC.
31 ROBERTS RD
PINE GROVE, PA 17963

3300 THERMALLY BROKEN ALUMINUM IN/OUTFOLD GLASS WALL 3 1/2 X 9 1/2 – IMPACT
INFOLD ELEVATION AND NOTES

DRAWN:	DWG NO.	REV
TJH	08–01078	A

SCALE	DATE	SHEET
NTS	08/06/10	1 OF 8

Luis R. Lomas P.E.
Texas No. 101889

REVISIONS			
REV	DESCRIPTION	DATE	APPROVED
A	REMOVED FLAP SEAL OPTION	07/12/11	R.L.

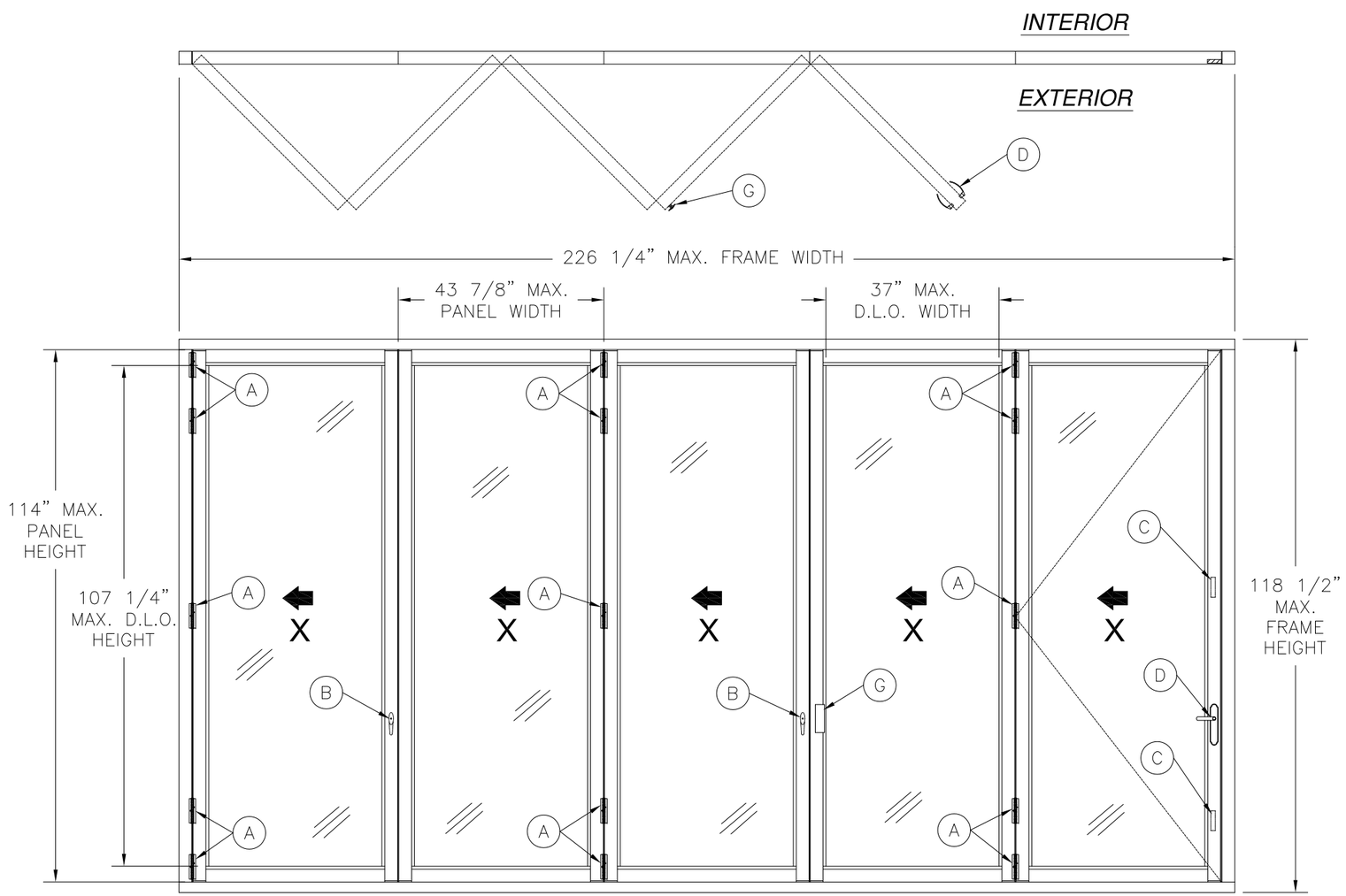

3300 THERMALLY BROKEN ALUMINUM OUTFOLDING GLASS WALL

EXTERIOR VIEW

HARDWARE SCHEDULE
A. 5 1/4" GEN. 2 SEMI-CONCEALED HINGE BY SOLAR INNOVATIONS
B. 2 POINT HANDLE & LOCK MS000487-XX BY SOLAR INNOVATIONS
C. HEAVY FLUSH BOLTS MD000442-00-XX BY SOLAR INNOVATIONS
D. SINGLE HANDLE WITH 5-POINT LOCK & DEADBOLT BY AMESBURY
E. TOP LOAD PIN AND TROLLY
F. BOTTOM LOAD PIN AND TROLLY
G. BUMPER HANDLE 34938 BY SOLAR INNOVATIONS

DESIGN PRESSURE RATING	*IMPACT RATING*
+ 50.0 PSF *- 60.0 PSF*	*LARGE AND SMALL MISSILE IMPACT*

WITH FLUSH SILL, SEE SILL OPTION 3
SHEET 4

DESIGN PRESSURE RATING	*IMPACT RATING*
±60PSF	*LARGE AND SMALL MISSILE IMPACT*

WITH STANDARD SILL, SEE SILL OPTION 1
SHEET 4

SOLAR INNOVATIONS, INC.
31 ROBERTS RD
PINE GROVE, PA 17963

3300 THERMALLY BROKEN ALUMINUM IN/OUTFOLD GLASS WALL 3 1/2 X 9 1/2 – IMPACT OUTFOLD ELEVATION AND HARDWARE SCHEDULE

DRAWN:	DWG NO.	REV
TJH	08-01078	A

SCALE	DATE	SHEET
NTS	08/06/10	2 OF 8

STATE OF TEXAS
LUIS R. LOMAS
101889
LICENSED
PROFESSIONAL ENGINEER

Luis R. Lomas P.E.
Texas No. 101889

REVISIONS			
REV	DESCRIPTION	DATE	APPROVED
A	REMOVED FLAP SEAL OPTION	07/12/11	R.L.

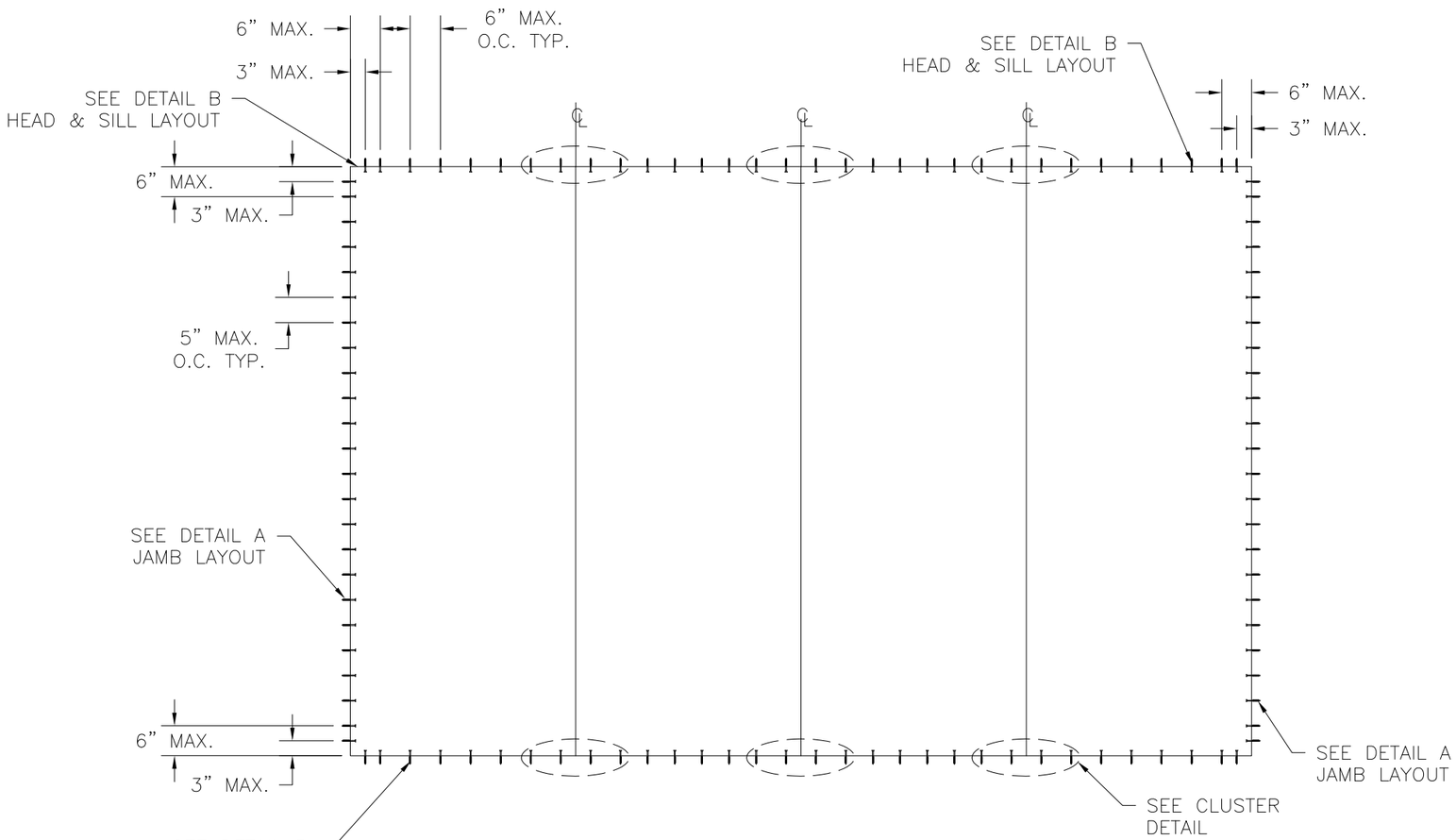

3300 THERMALLY BROKEN ALUMINUM IN/OUTFOLD GLASS WALL

4 PANEL UNIT SHOWN, ANCHORING LAYOUT APPLIES TO ALL APPROVED CONFIGURATIONS

ANCHORING NOTES:

1) ALL FASTENERS TO BE CORROSION RESISTANT.
2) SHIM AS REQUIRED AT EACH INSTALLATION ANCHOR WITH LOAD BEARING SHIM. SHIM WHERE SPACE OF 1/16" OR GREATER OCCURS. MAXIMUM ALLOWABLE SHIM STACK TO BE 1/4".
3) FOR ANCHORING INTO CONCRETE AT HEAD AND SILL USE 1/4" ITW TAPCONS WITH SUFFICIENT LENGTH TO ACHIEVE A 1 3/4" MINIMUM EMBEDMENT INTO SUBSTRATE WITH 2 1/2'' MINIMUM EDGE DISTANCE. LOCATE ANCHORS AS SHOWN IN ELEVATIONS AND INSTALLATION DETAILS.
4) FOR ANCHORING INTO MASONRY AT JAMBS USE 5/16" ITW TAPCONS WITH SUFFICIENT LENGTH TO ACHIEVE A 1 1/4" MINIMUM EMBEDMENT INTO SUBSTRATE WITH 3'' MINIMUM EDGE DISTANCE. LOCATE ANCHORS AS SHOWN IN ELEVATIONS AND INSTALLATION DETAILS.
5) FOR ANCHORING INTO WOOD FRAMING OR 2X BUCK AT HEAD AND SILL USE #14 WOOD SCREW WITH SUFFICIENT LENGTH TO ACHIEVE A 1 11/16" MINIMUM EMBEDMENT INTO SUBSTRATE. LOCATE ANCHORS AS SHOWN IN ELEVATIONS AND INSTALLATION DETAILS.
6) FOR ANCHORING INTO WOOD FRAMING OR 2X BUCK AT JAMBS USE 5/16" TAPCON WITH SUFFICIENT LENGTH TO ACHIEVE A 1 13/16" MINIMUM EMBEDMENT INTO SUBSTRATE. LOCATE ANCHORS AS SHOWN IN ELEVATIONS AND INSTALLATION DETAILS.
7) INSTALLATION ANCHORS SHALL BE INSTALLED IN ACCORDANCE WITH ANCHOR MANUFACTURER'S INSTALLATION INSTRUCTIONS, AND ANCHORS SHALL NOT BE USED IN SUBSTRATES WITH STRENGTHS LESS THAN THE MINIMUM STRENGTH SPECIFIED BELOW:
   A. WOOD – MINIMUM SPECIFIC GRAVITY OF G=0.42
   B. CONCRETE – MINIMUM COMPRESSIVE STRENGTH OF 3,192 PSI.
   C. MASONRY – STRENGTH CONFORMANCE TO ASTM C–90, GRADE N, TYPE 1 (OR GREATER).

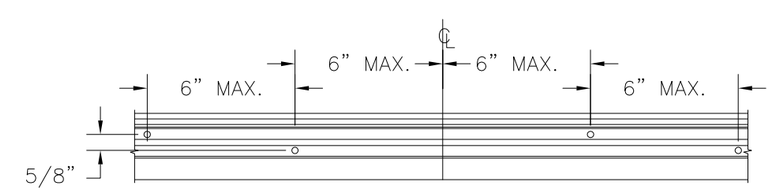

CLUSTER DETAIL

TYPICAL HEAD & SILL

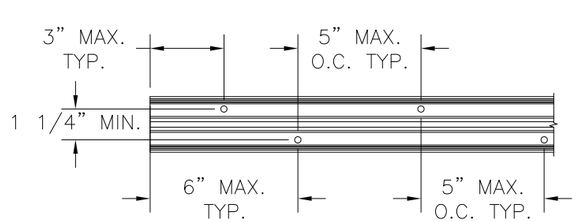

DETAIL A

JAMB LAYOUT

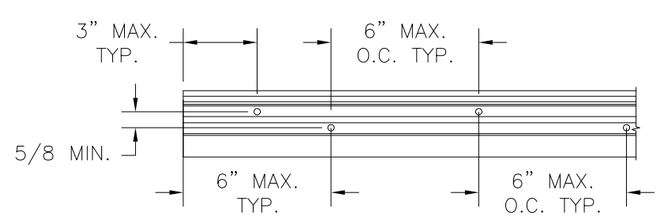

DETAIL B

HEAD & SILL LAYOUT

SOLAR INNOVATIONS, INC.
31 ROBERTS RD
PINE GROVE, PA 17963

3300 THERMALLY BROKEN ALUMINUM IN/OUTFOLD GLASS WALL 3 1/2 X 9 1/2 – IMPACT ANCHORING LAYOUT, DETAILS AND NOTES

DRAWN:	DWG NO.	REV
TJH	08–01078	A

SCALE	DATE	SHEET
NTS	08/06/10	3 OF 8

Luis R. Lomas P.E.
Texas No. 101889

REVISIONS			
REV	DESCRIPTION	DATE	APPROVED
A	REMOVED FLAP SEAL OPTION	07/12/11	R.L.

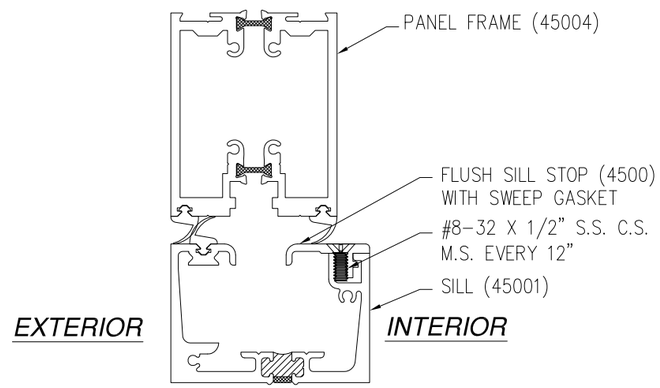

SILL OPTION 3
OUTFOLD SILL

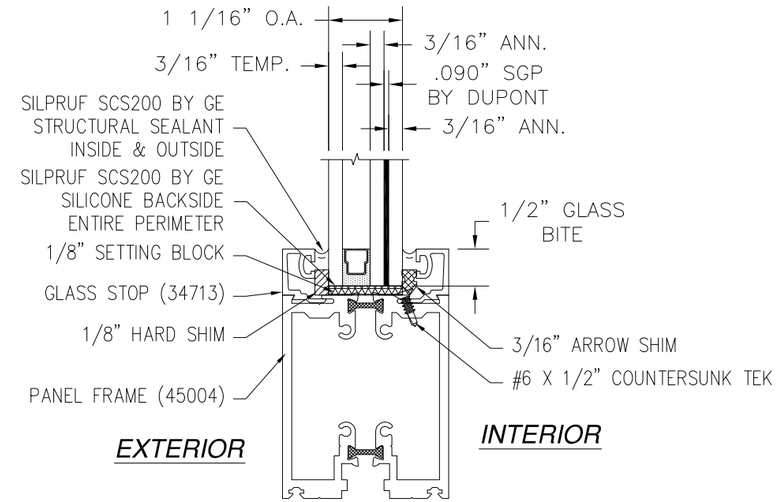

GLAZING DETAIL 1

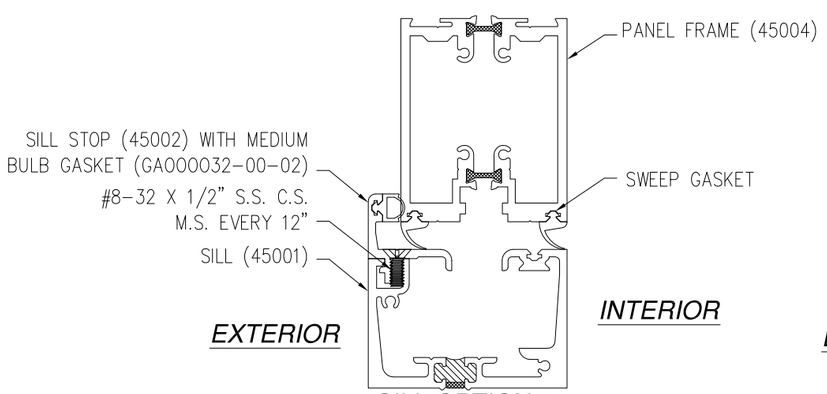

SILL OPTION 2
INFOLD SILL

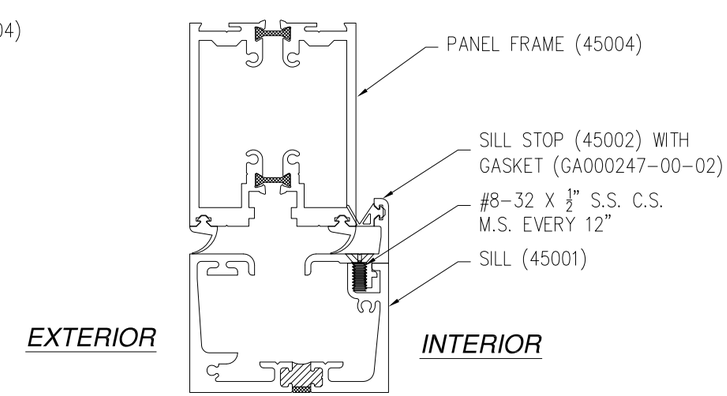

SILL OPTION 1
OUTFOLD SILL

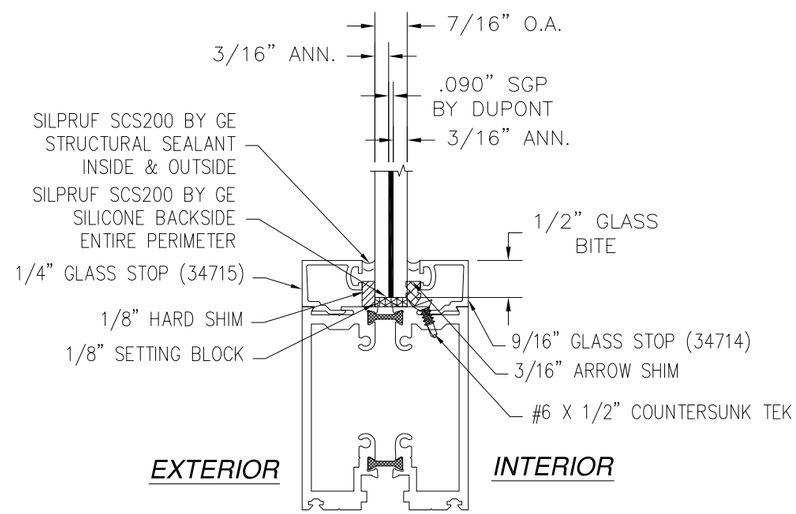

GLAZING DETAIL 2

SOLAR INNOVATIONS, INC.
31 ROBERTS RD
PINE GROVE, PA 17963

3300 THERMALLY BROKEN ALUMINUM IN/OUTFOLD GLASS WALL 3 1/2 X 9 1/2 – IMPACT SILL OPTIONS AND GLAZING DETAILS

DRAWN:	DWG NO.	REV
TJH	08-01078	A
SCALE NTS	DATE 08/06/10	SHEET 4 OF 8

Luis R. Lomas P.E.
Texas No. 101889

REVISIONS			
REV	DESCRIPTION	DATE	APPROVED
A	REMOVED FLAP SEAL OPTION	07/12/11	R.L.

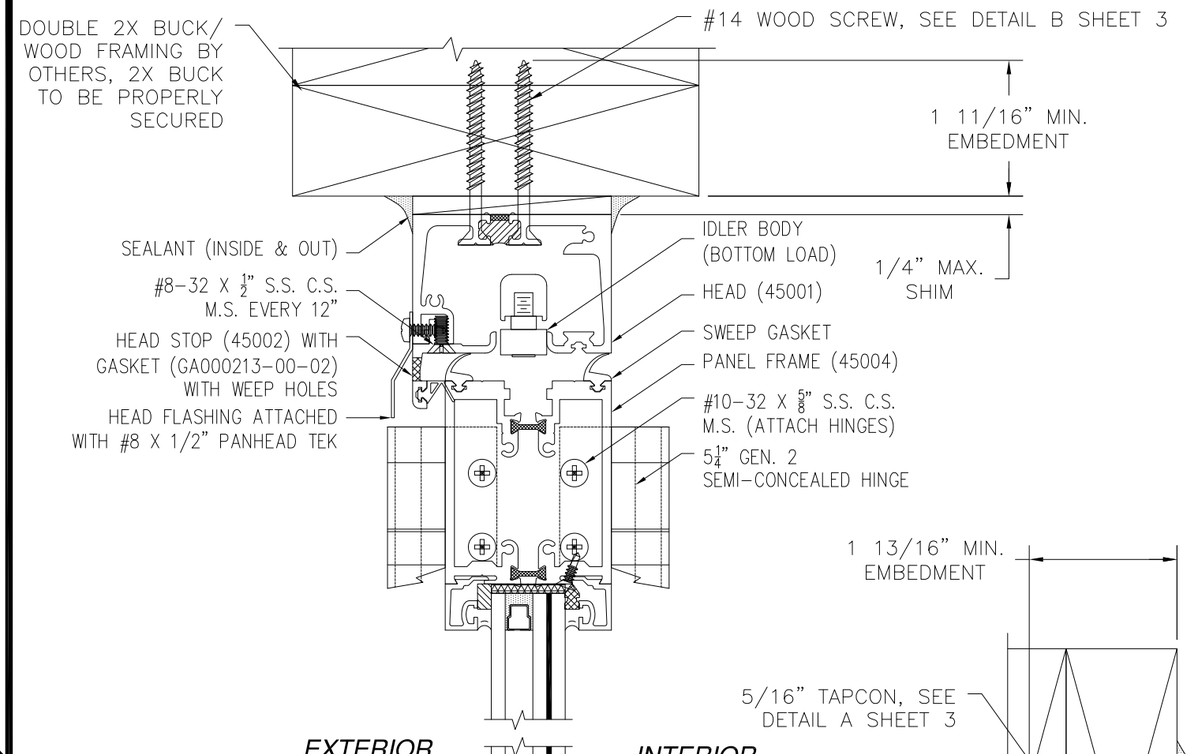

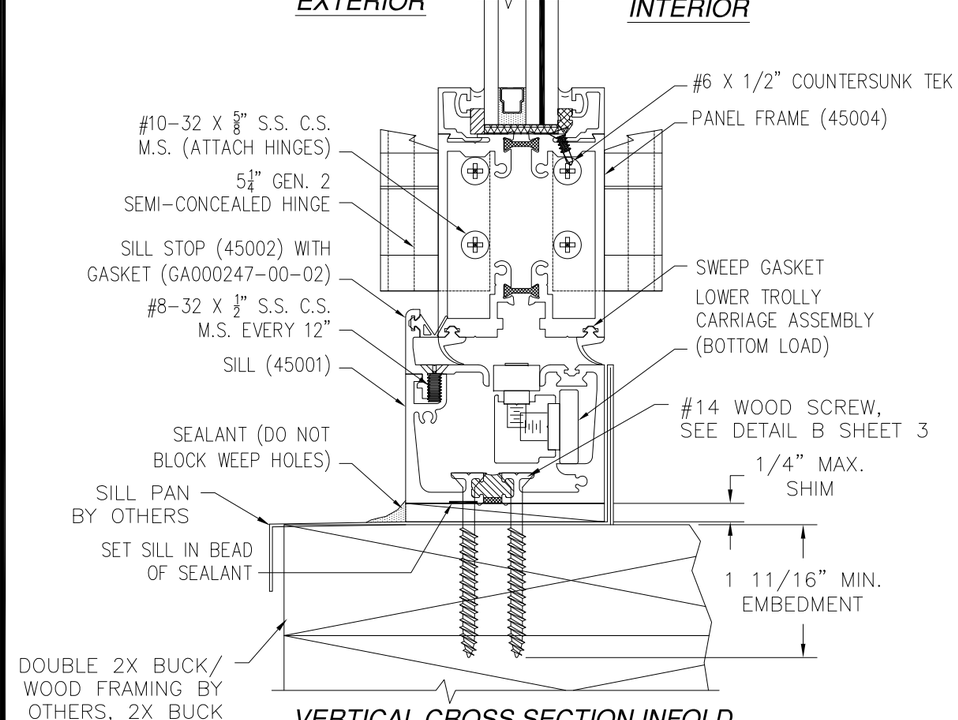

VERTICAL CROSS SECTION INFOLD

2X BUCK/WOOD FRAMING INSTALLATION

SILL OPTION 1 SHOWN, SILL OPTION 2 SIMILAR

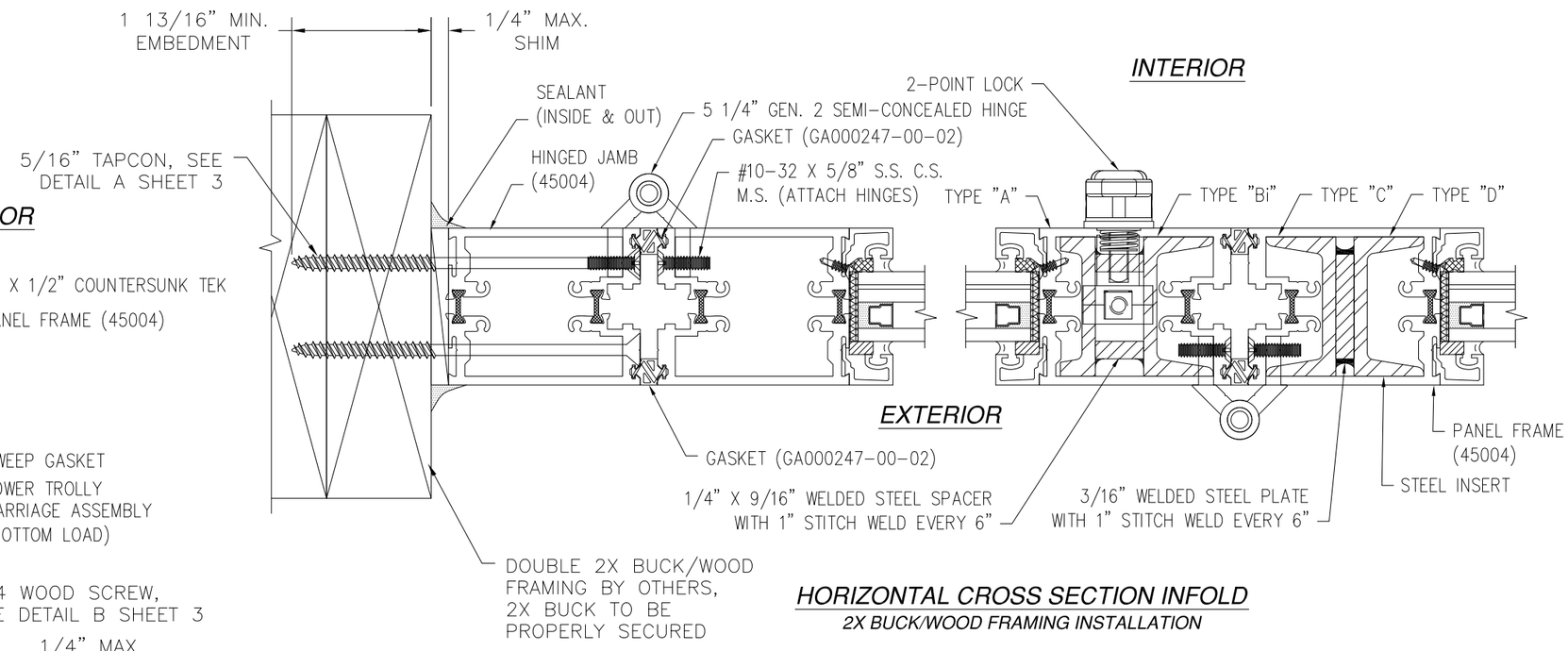

HORIZONTAL CROSS SECTION INFOLD

2X BUCK/WOOD FRAMING INSTALLATION

SOLAR INNOVATIONS, INC.
31 ROBERTS RD
PINE GROVE, PA 17963

3300 THERMALLY BROKEN ALUMINUM IN/OUTFOLD GLASS WALL 3 1/2 X 9 1/2 – IMPACT INFOLD INSTALLATION DETAILS

DRAWN: TJH	DWG NO. 08-01078	REV A
SCALE NTS	DATE 08/06/10	SHEET 5 OF 8

Luis R. Lomas P.E.
Texas No. 101889

REVISIONS			
REV	DESCRIPTION	DATE	APPROVED
A	REMOVED FLAP SEAL OPTION	07/12/11	R.L.

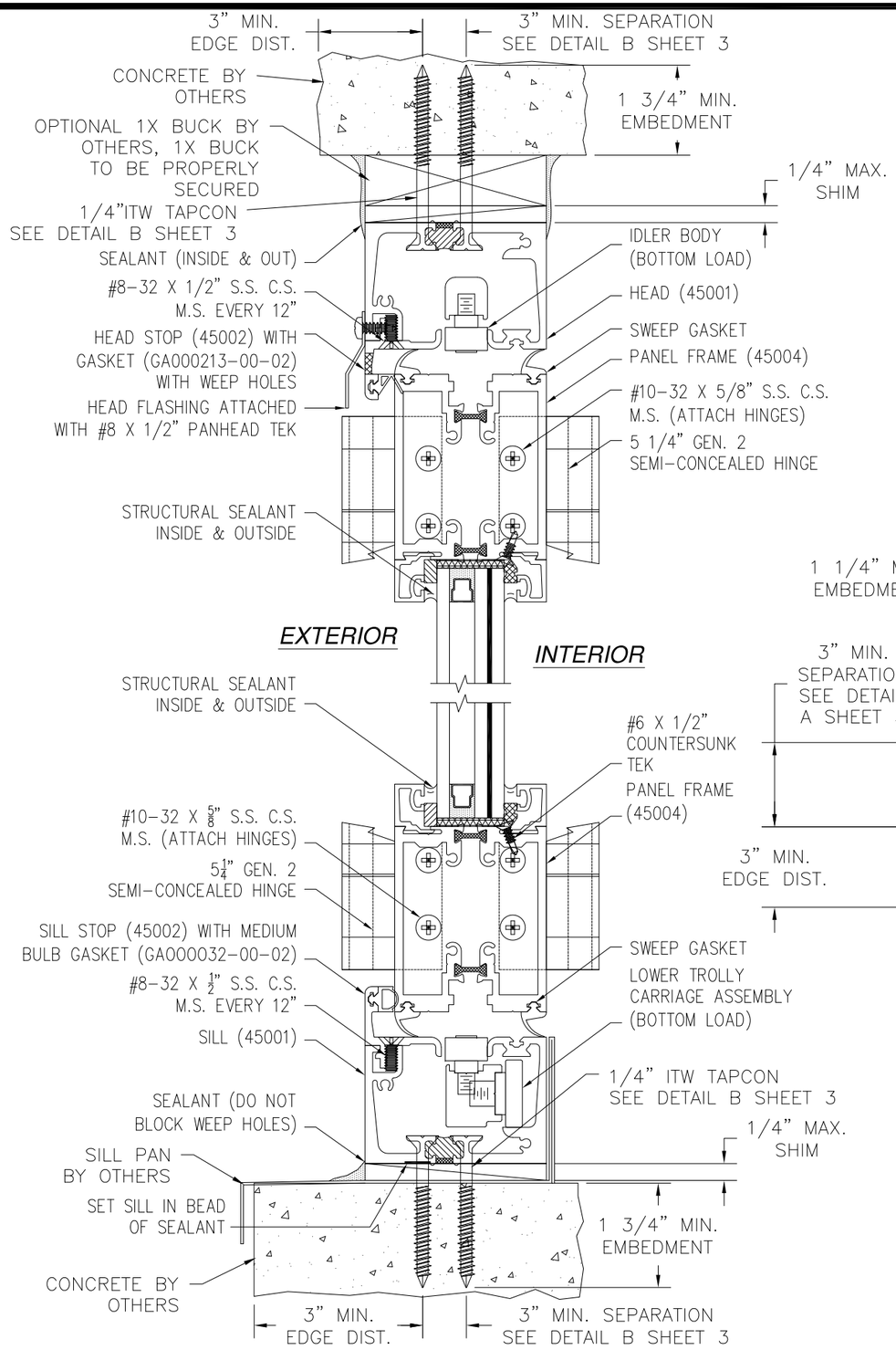

VERTICAL CROSS SECTION INFOLD

CONCRETE INSTALLATION INSTALLATION

SILL OPTION 2 SHOWN, SILL OPTION 1 SIMILAR

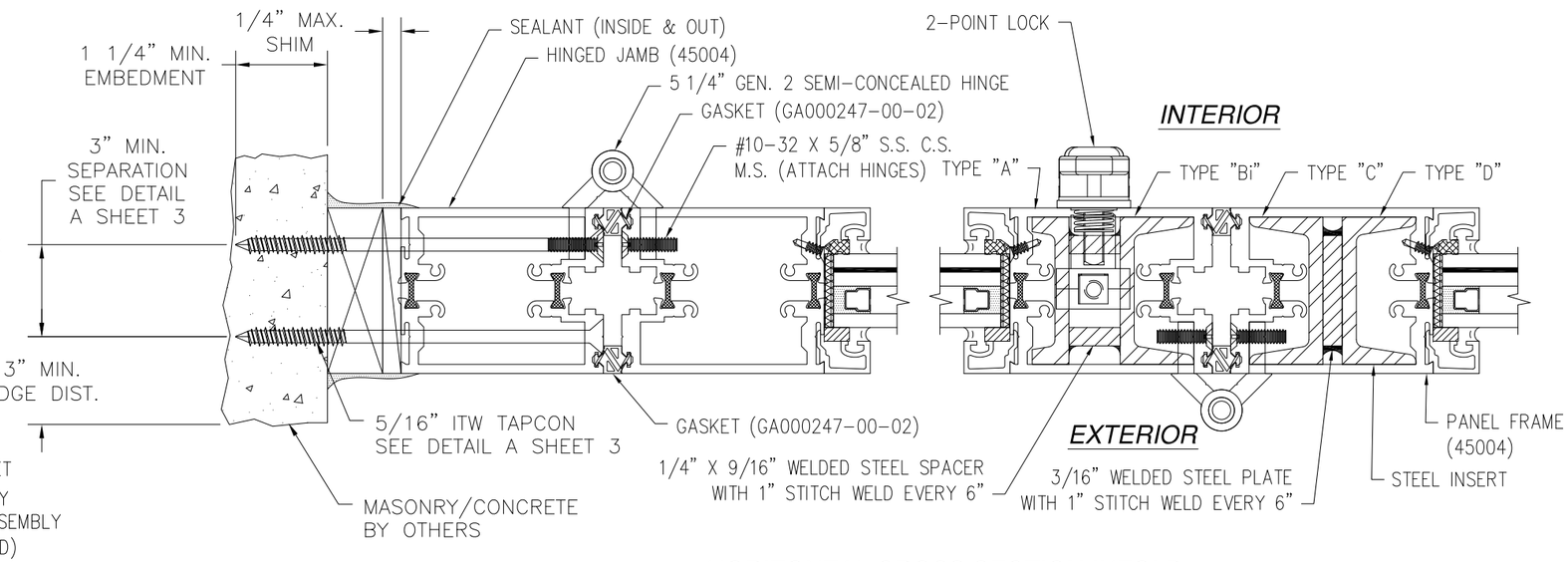

HORIZONTAL CROSS SECTION INFOLD

MASONRY/CONCRETE INSTALLATION

SOLAR INNOVATIONS, INC.
31 ROBERTS RD
PINE GROVE, PA 17963

3300 THERMALLY BROKEN ALUMINUM IN/OUTFOLD GLASS WALL 3 1/2 X 9 1/2 – IMPACT INFOLD INSTALLATION DETAILS

DRAWN:	DWG NO.	REV
TJH	08-01078	A
SCALE NTS	DATE 08/06/10	SHEET 6 OF 8

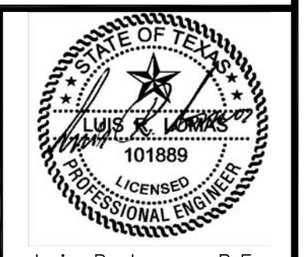

Luis R. Lomas P.E.
Texas No. 101889

REVISIONS			
REV	DESCRIPTION	DATE	APPROVED
A	REMOVED FLAP SEAL OPTION	07/12/11	R.L.

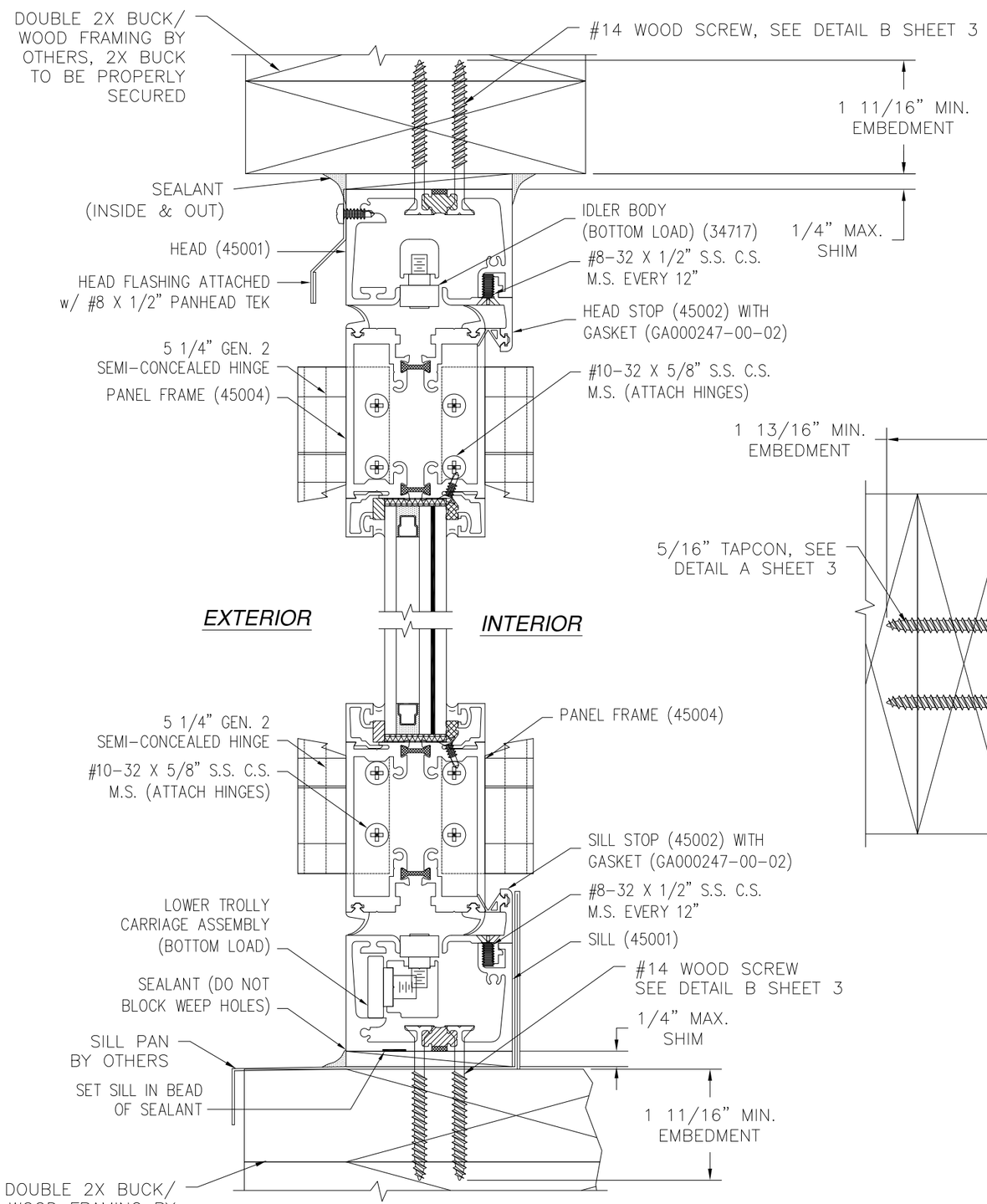

VERTICAL CROSS SECTION OUTFOLD

2X BUCK/WOOD FRAMING INSTALLATION

SILL OPTION 4 SHOWN, SILL OPTION 3 SIMILAR

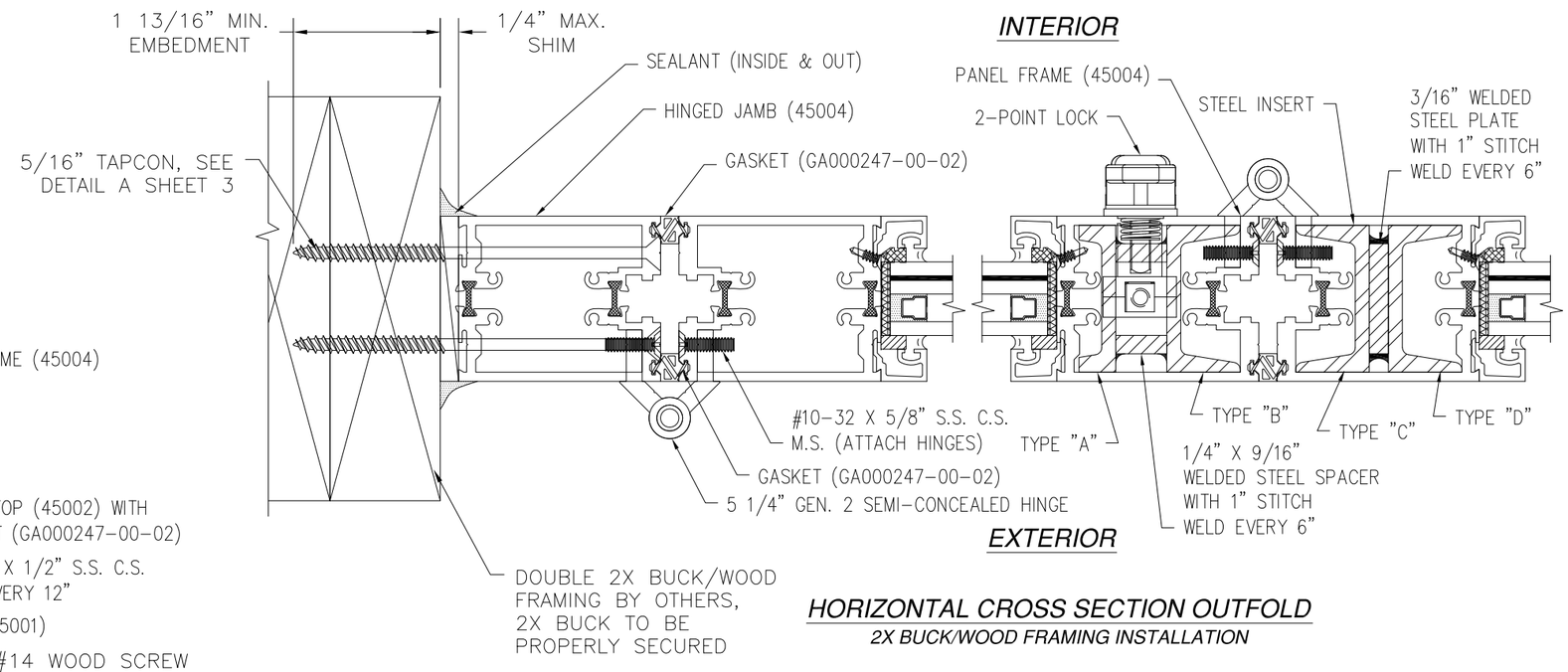

HORIZONTAL CROSS SECTION OUTFOLD

2X BUCK/WOOD FRAMING INSTALLATION

SOLAR INNOVATIONS, INC.
31 ROBERTS RD
PINE GROVE, PA 17963

3300 THERMALLY BROKEN ALUMINUM IN/OUTFOLD GLASS WALL 3 1/2 X 9 1/2 – IMPACT OUTFOLD INSTALLATION DETAILS

DRAWN: TJH	DWG NO. 08-01078	REV A
SCALE NTS	DATE 08/06/10	SHEET 7 OF 8

Luis R. Lomas P.E.
Texas No. 101889

REVISIONS			
REV	DESCRIPTION	DATE	APPROVED
A	REMOVED FLAP SEAL OPTION	07/12/11	R.L.

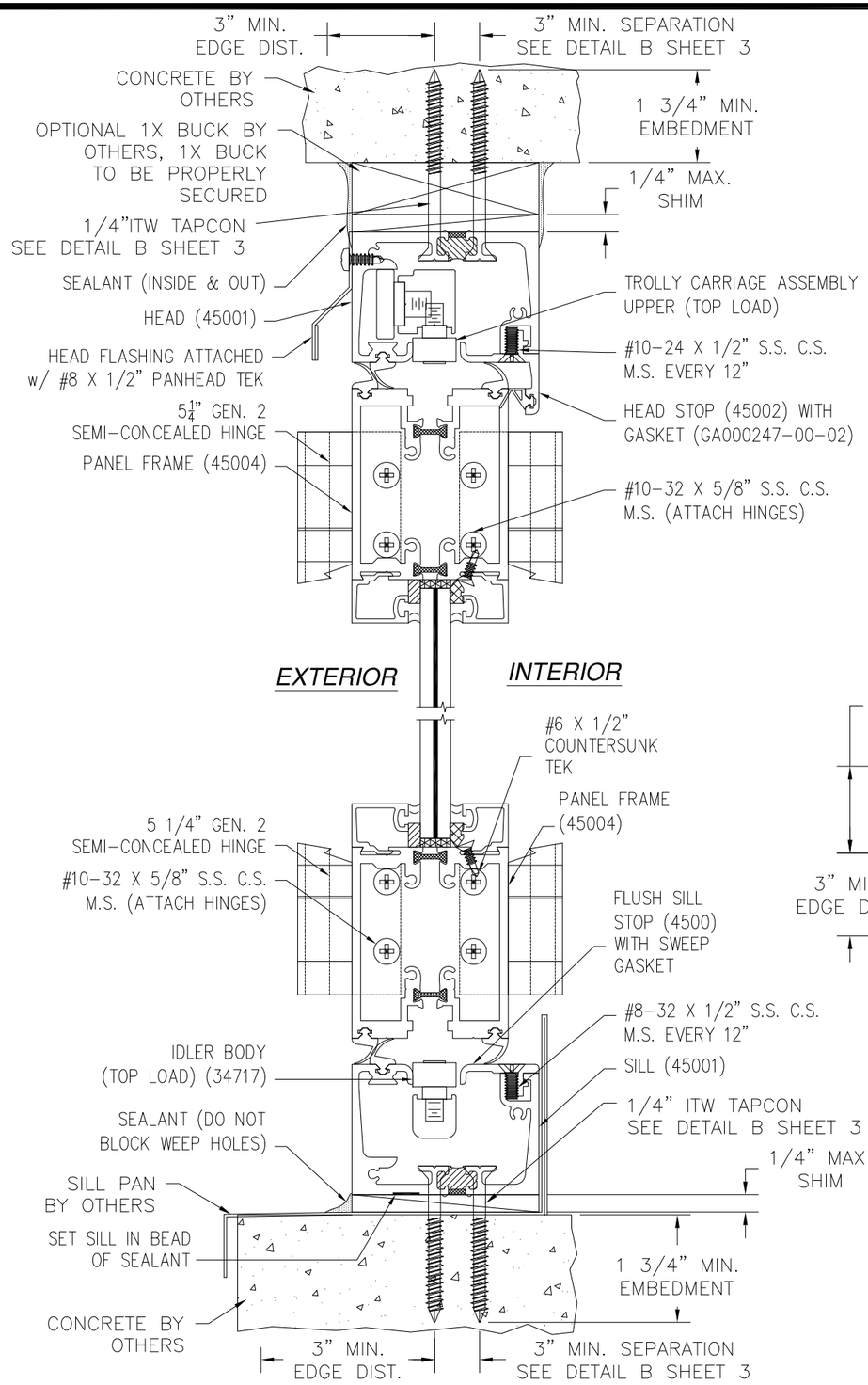

VERTICAL CROSS SECTION OUTFOLD

CONCRETE INSTALLATION INSTALLATION

SILL OPTION 3 SHOWN, SILL OPTION 4 SIMILAR

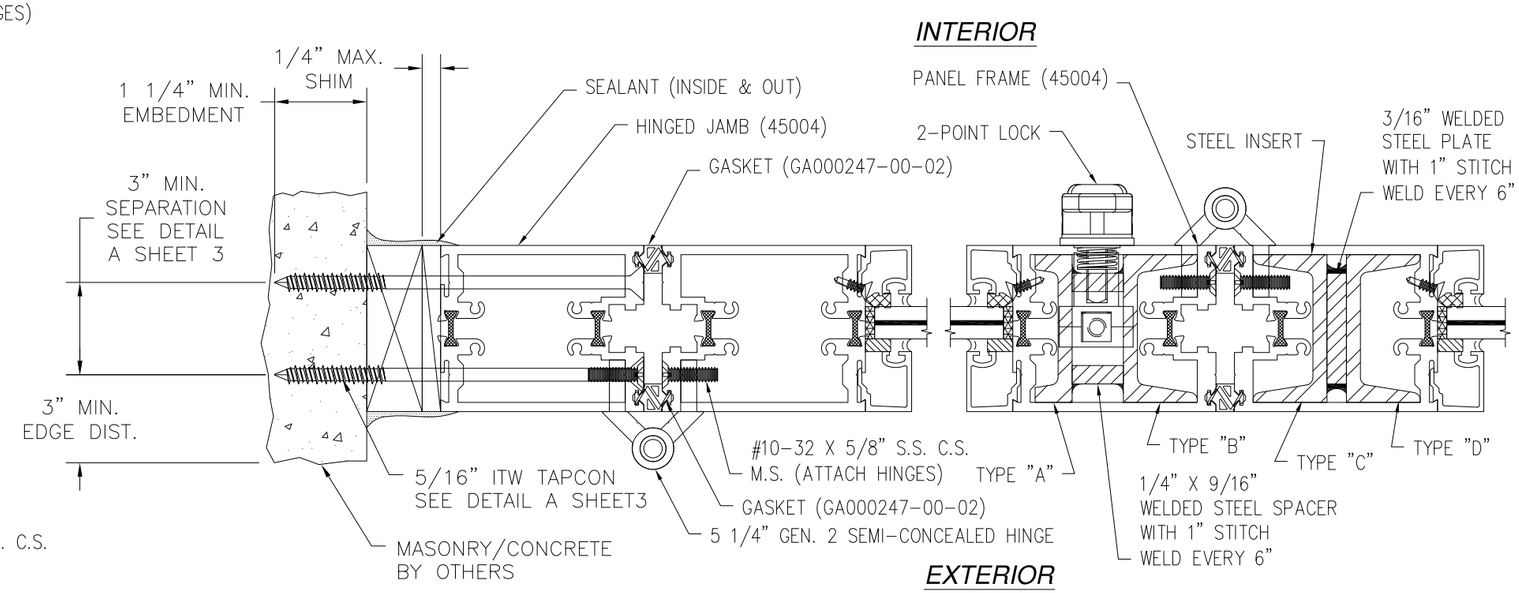

HORIZONTAL CROSS SECTION OUTFOLD

MASONRY/COCNCRETE INSTALLATION

SOLAR INNOVATIONS, INC.
31 ROBERTS RD
PINE GROVE, PA 17963

3300 THERMALLY BROKEN ALUMINUM IN/OUTFOLD GLASS WALL 3 1/2 X 9 1/2 – IMPACT OUTFOLD INSTALLATION DETAILS

DRAWN:	DWG NO.	REV
TJH	08-01078	A
SCALE NTS	DATE 08/06/10	SHEET 8 OF 8

Luis R. Lomas P.E.
Texas No. 101889