TA[illegible] OF CONTENTS:

SHEET	DESCRIPTION
1	GENERAL NOTES, TABLE OF CONTENTS, WINDOW CONFIGURATIONS
2	TYPE I - SINGLE PANEL UNITS
3	TYPE II - COMBINED SINGLE PANEL UNITS
4	TYPE III - MULTIPLE PANEL UNITS
5	GLAZING CONFIGURATIONS AND DESIGNED LOADS
6	SECTIONS DETAILS
7	FRAMING ANCHORAGE OPTIONS
8	TYPE I - ANCHORAGE DESIGN
9	TYPE II - ANCHORAGE DESIGN
10	TYPE III - ANCHORAGE DESIGN
11	WINDOW COMPONENTS, FRAME ASSEMBLY
12	FRAME ASSEMBLY

GENERAL NOTES: (IBC 2006 & IRC 2006 w/ 2006 TEXAS REVISIONS)

1- CODE: THIS PRODUCT HAS BEEN TESTED AND DESIGNED IN ACCORDANCE WITH THE IBC 2006 & IRC 2006 W/ 2006 TEXAS REVISIONS. ASTM E330, ASTME 1886, ASTM E1996 (MISSILE LEVEL A, D & E).

2- DEFINITION: THIS PRODUCT IS AN ALUMINUM STOREFRONT TYPE WINDOW DESIGNED, CONSTRUCTED AND ERECTED TO EASILY ENCLOSE AN AREA, PROVIDING PROTECTION FROM HURRICANE FORCE WINDS AND WIND BORNE DEBRIS WITHIN THE ALLOWABLE DESIGNED PRESSURES AND LIMITATIONS STATED IN THIS APPROVAL.

3- POSTING: A PERMANENT LABEL SHALL BE PROVIDED AS PER IBC 2006 SECTION 1703.5. IT SHALL BE PLACED ON A READILY VISIBLE LOCATION AND A MINIMUM OF ONE LABEL PER OPENING.

4- DESIGN LOADS: LOADS MUST BE CALCULATED BY A PROFESSIONAL ARCHITECT OR ENGINEER FOR EACH SPECIFIC PROJECT. THE CALCULATED DESIGNED PRESSURE MUST NOT EXCEED THE ALLOWABLE APPROVED PRESSURE.

5- MATERIAL: ALL ALUMINUM PARTS TO BE 6063-T6 OR 6005-T5 ALLOYS AS INDICATED AND GLAZING TO BE LAMINATED IMPACT RESISTANT GLASS AS SPECIFIED ON THIS APPROVAL.

6- FASTENERS: ASSEMBLY SCREWS AND ANCHORS SHALL BE AS SPECIFIED IN THIS CURRENT SET OF DRAWINGS.

7- USE: IT SHALL BE THE RESPONSIBILITY OF THE CONTRACTOR, ARCHITECT OR ENGINEER OF RECORD TO VERIFY THE FOLLOWING:
7.1- THE STABILITY OF THE STRUCTURE WHERE THE UNIT IS TO BE ATTACHED INSURING PROPER ANCHORAGE.
7.2- THE SITE SPECIFIC PROJECT CRITERIA, SUCH AS BUT NOT LIMITED TO, LOCAL CODE REQUIREMENTS, DESIGNED PRESSURES ETC.
7.3- THAT THIS APPROVAL IS ADEQUATE TO THE SPECIFIC PROJECT.

8- 33 1/3% INCREASE IN ALLOWABLE LOADS HAVE NOT BEEN USED IN THE DESIGN OF THE ANCHORS FOR THIS PRODUCT APPROVAL, HOWEVER, WOOD ANCHORS WITH 1.6 INCREASE FOR WIND LOAD DURATION HAVE BEEN USED.

CODE AND STANDARD COMPLIANCE:

NTERNATIONAL BUILDING CODE (IBC 2006) WITH TEXAS REVISIONS
INTERNATIONAL RESIDENTIAL CODE (IRC 2006) WITH TEXAS REVISIONS
ASTM E330, E1886, E1996 (LEVELS A, D & E MISSILE)

WINDOW CONFIGURATIONS

TYPE I
SINGLE PANEL UNITS
SHEET 2

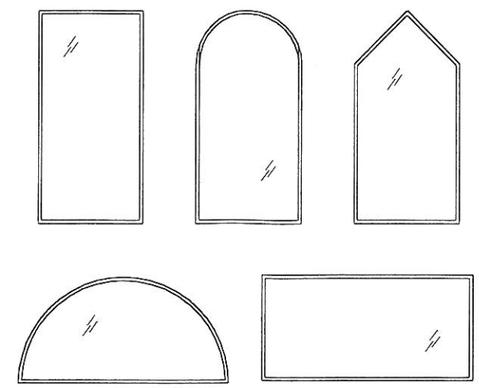

TYPE II
COMBINED SINGLE PANEL UNITS
SHEET 3

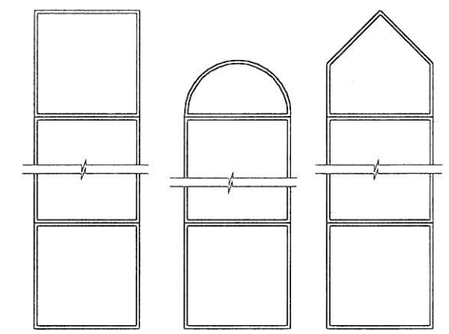

TYPE III
MULTIPLE PANEL UNITS
SHEET 4

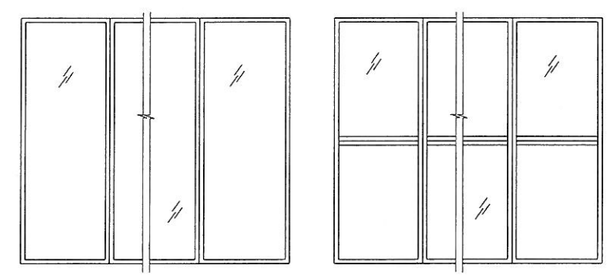

USER INSTRUCTIONS:

1- DETERMINE DESIGN WIND LOAD PRESSURES AS PER ITEM 4 OF GENERAL NOTES.

2- BASED ON THE WINDOW TYPE, CONFIGURATION AND SIZE VERIFY THE FRAMING CAPACITY BY USING THE PROPER TABLES ON SHEETS 2, 3 OR 4.

3- BASED ON TYPE OF GLASS CHECK GLAZING CAPACITY BY USING TABLE 5 ON SHEET 5. GLASS CAPACITY MUST BE GREATER THAN OR EQUAL TO THE CALCULATED PRESSURE.

4- FUNCTION OF THE WINDOW TYPE USE SHEETS 7, 8, 9 OR 10 TO SELECT AND DESIGN THE PROPER FRAMING ANCHORAGE.

ALLOWABLE PRESSURE RATING MUST BE GREATER THAN THE CALCULATED PRESSURE.

MAXIMUM PRESSURE MUST NOT EXCEED 130 PSF
MAXIMUM GLAZING DLO AREA MUST NOT EXCEED: 45.6 SQF
LEVELS A, D & E MISSILE IMPACT RATED

HMC
HURRICANE MANUFACTURING CORPORATION
11850 MIRAMAR PARKWAY
MIRAMAR - FL. - 33025
Phone: (954) 392-7933
Fax: (954) 392-7356

PRODUCT:
HMC 1000
ALUMINUM STOREFRONT

Engineering:
EngCo Inc.
CR 11234
5595 Orange Dr. 201
Davie, Fl. 33314
ENGCO@AOL.COM

STATE OF TEXAS
PEDRO FIGUEIREDO
102937
LICENSED PROFESSIONAL ENGINEER

APR 26 2011
Engineer Seal
Pedro De Figueiredo
TEXAS - PE 102937

DRAFTING:
PK DRAFTING & MORE

Date: 04/26/2011
Scale: NA
Design by: PPMF

Drawing Number
11-086

TYPE I - SINGLE PANEL UNITS

TABLE 1
ALLOWABLE MODULE PRESSURE
FOR SINGLE PANELS

A (IN)	B (IN)	GLAZING TYPE A2	A3	A5	B3	C1
48	48	60	130	130	130	130
	60	60	130	130	130	130
	72	60	130	130	130	130
	84	60	130	130	130	130
	96	60	130	130	130	130
	108	60	130	130	130	130
	120	60	129	129	128	130
	144	60	118	118	117	130
50	60	60	130	130	130	130
	72	60	130	130	130	130
	84	60	130	130	130	130
	96	60	130	130	130	130
	108	60	130	130	130	130
	120	60	122	122	121	130
	144	60	111	111	110	130
60	60	60	130	130	130	130
	72	60	130	130	130	130
	84	60	130	130	130	130
	96	60	129	129	128	130
	108	60	114	114	113	130
	120	60	102	102	101	130
66	60	60	130	130	130	130
	72	60	118	118	118	118
	84	60	118	118	118	118
	96	60	118	118	118	118
	109	60	104	104	103	118
72	60	60	130	130	130	130
	72	60	108	108	108	108
	84	60	108	108	108	108
	96	60	108	108	108	108
	100	60	108	108	107	108
84	60	60	130	130	130	130
	72	60	108	108	108	108
	85	60	93	93	93	93
96	60	60	129	129	128	130
	72	60	108	108	108	108
	75	60	104	104	104	104
108	60	60	114	114	113	130
	67	60	104	104	103	117
120	60	60	102	102	101	130

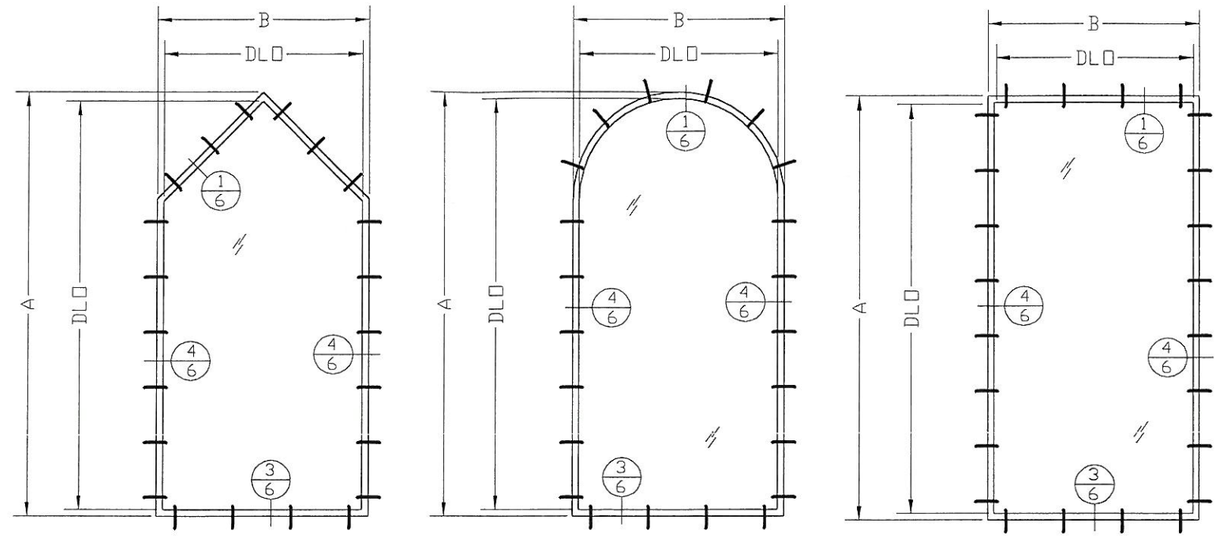

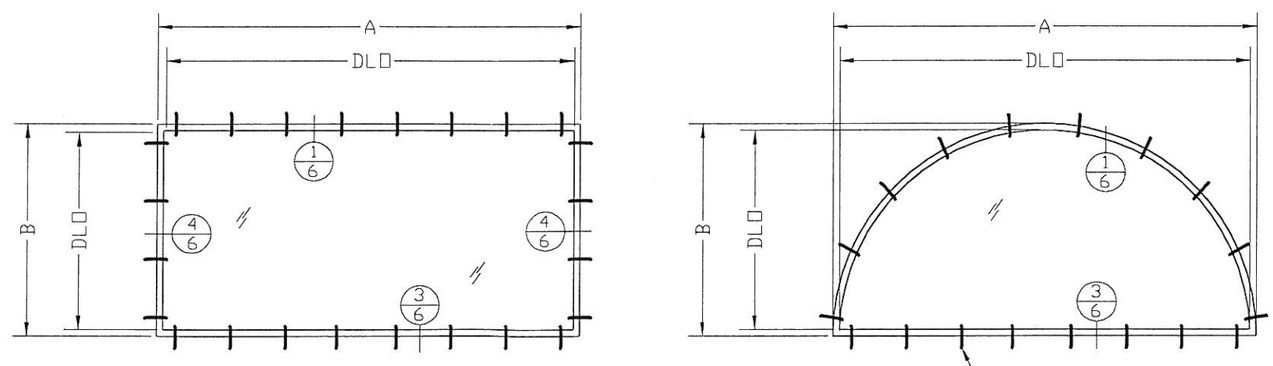

EXAMPLE: PdK= 108 PSF
MODULAR SIZE: 96X72
GLASS TYPE C1: MAX. 108 PSF (TABLE 1)

TYPICAL ANCHORS
SEE SHEETS 7 AND 8
FOR MORE DETAILS

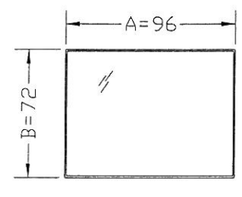

WINDOW TYPE I NOTES:
1- SEE SHEET 5 FOR GLAZING COMPOSITION
2- USE SHEETS 7 AND 8 TABLE 1.1 FOR ANCHORAGE DESIGN
3- ALL SHAPES CAN BE INSTALLED ROTATED

HMC
HURRICANE MANUFACTURING CORPORATION
11850 MIRAMAR PARKWAY
MIRAMAR - FL. - 33025
Phone: (954) 392-7933
Fax: (954) 392-7356

PRODUCT:
HMC 1000
ALUMINUM STOREFRONT

Engineering:
EngCo Inc.
CR 11234
5595 Orange Dr. 201
Davie, Fl. 33314
ENGCO@AOL.COM

STATE OF TEXAS
PEDRO FIGUEIREDO
102937
LICENSED
PROFESSIONAL ENGINEER
APR 26 2011

Engineer Seal
Pedro De Figueiredo
TEXAS - PE 102937

DRAFTING:
PK DRAFTING & MORE

Date: 04/26/2011
Scale: NA
Design by: PPMF

Drawing Number
11-086

TYPE II - COMBINED SINGLE PANEL UNITS

TABLE 2
ALLOWABLE MODULE PRESSURE
FOR COMBINED SINGLE PANELS

A (IN)	B (IN)	PRESSURE ± (PSF)
48	48	130
	60	130
	72	102
	84	81
	96	68
	104	61
50	60	130
	72	100
	84	79
	96	66
	104	59
60	60	130
	72	93
	84	72
	96	59
66	60	130
	72	91
	84	70
	93	59
72	60	130
	72	90
	84	68
	91	59
84	60	130
	72	90
	84	66
	86	64
96	60	130
	72	90
	75	83
108	60	130
	67	105
120	60	130
144	50	130

EXAMPLE: PdK= 90PSF
MODULAR SIZE: 96X72
GLASS TYPE C1: MAX. 108 PSF (TABLE 5)
MULLION SPAN: 72"
PRESSURE: MAX. 90 PSF (TABLE 2)

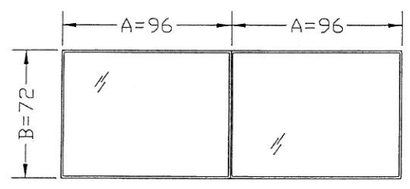

VERTICAL MODULAR UNITS

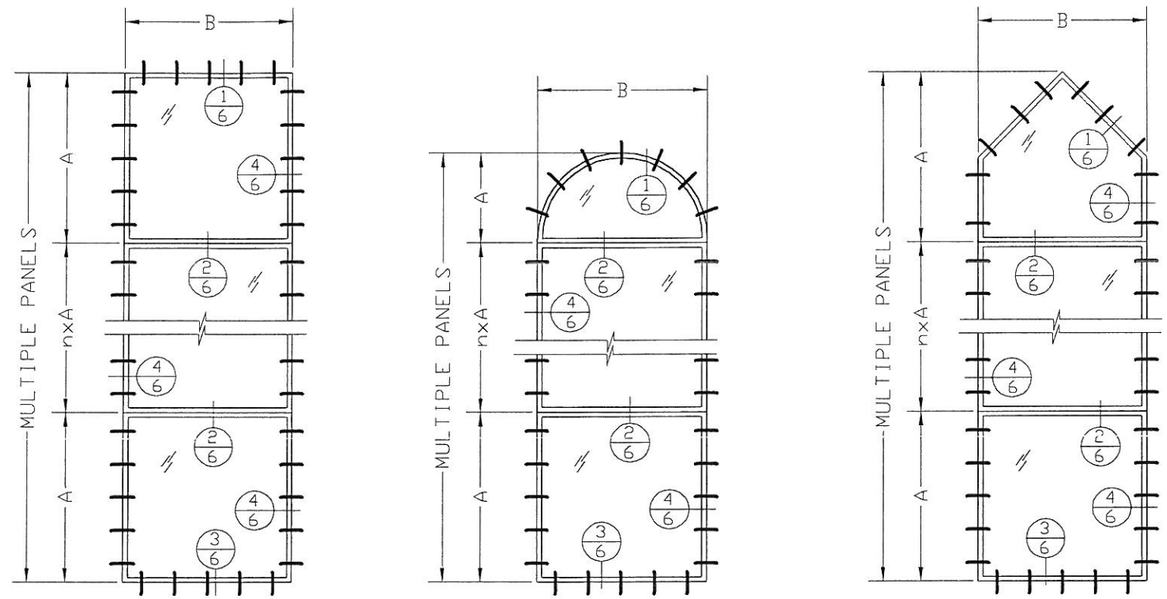

nxA: MULTIPLES "A" PANELS:
n= 1, 2, 3, 4, UNLIMITED

HORIZONTAL MODULAR UNITS

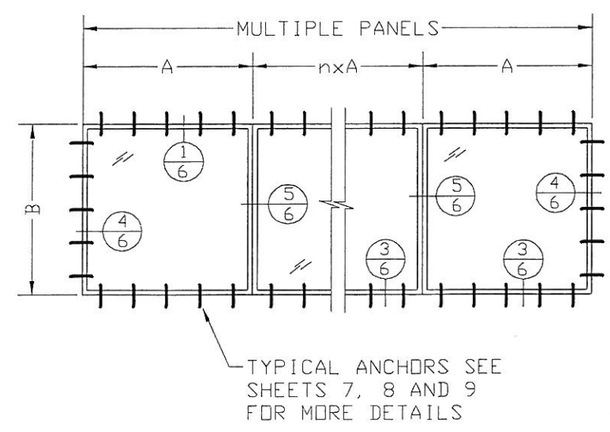

TYPICAL ANCHORS SEE
SHEETS 7, 8 AND 9
FOR MORE DETAILS

WINDOW TYPE II NOTES:

1- USE SHEET 5 FOR GLAZING COMPOSITION AND GLAZING DESIGN USING TABLE 5

2- USE SHEETS 7, 8 AND 9 TABLES 1.1 AND 2.1 FOR ANCHORAGE DESIGN

3- DIMENSION "B" EQUAL TO MULLION SPAN

HMC
HURRICANE MANUFACTURING CORPORATION
11850 MIRAMAR PARKWAY
MIRAMAR - FL. - 33025
Phone: (954) 392-7933
Fax: (954) 392-7356

PRODUCT:
HMC 1000
ALUMINUM STOREFRONT

Engineering:
EngCo Inc.
CR 11234
5595 Orange Dr. 201
Davie, Fl. 33314
ENGCO@AOL.COM

STATE OF TEXAS
PEDRO FIGUEIREDO
102937
LICENSED
PROFESSIONAL ENGINEER
APR 26 2011

Engineer Seal
Pedro De Figueiredo
TEXAS - PE 102937

DRAFTING:
PK DRAFTING & MORE

Date: 04/26/2011
Scale: NA
Design by: PPMF

Drawing Number
11-086

TYPE III - MULTIPLE PANEL UNITS

TABLE 3
ALLOWABLE MODULE PRESSURE
FOR VERTICAL MULL FRAMING

TW (IN)	FH (IN)	PRESSURE ± (PSF)	G VALUES 50% (IN)	G VALUES 100% (IN)
48	48	130	0.25	0.25
	60	130	0.25	0.25
	72	130	0.25	0.25
	84	130	0.27	0.25
	96	117	0.43	0.28
	104	100	0.52	0.33
50	60	130	0.25	0.25
	72	130	0.25	0.25
	84	130	0.28	0.25
	96	113	0.43	0.28
	104	97	0.52	0.33
60	60	130	0.25	0.25
	72	130	0.25	0.25
	84	124	0.30	0.25
	96	102	0.44	0.28
66	60	130	0.25	0.25
	72	130	0.25	0.25
	84	120	0.30	0.25
	93	102	0.41	0.26
72	60	130	0.25	0.25
	72	130	0.25	0.25
	84	117	0.31	0.25
	91	102	0.38	0.25
84	60	130	0.25	0.25
	72	130	0.25	0.25
	84	114	0.31	0.25
	86	110	0.33	0.25
96	60	130	0.25	0.25
	72	130	0.25	0.25
	75	130	0.25	0.25
108	60	130	0.25	0.25
	67	130	0.25	0.25
120	60	130	0.25	0.25
144	50	130	0.25	0.25

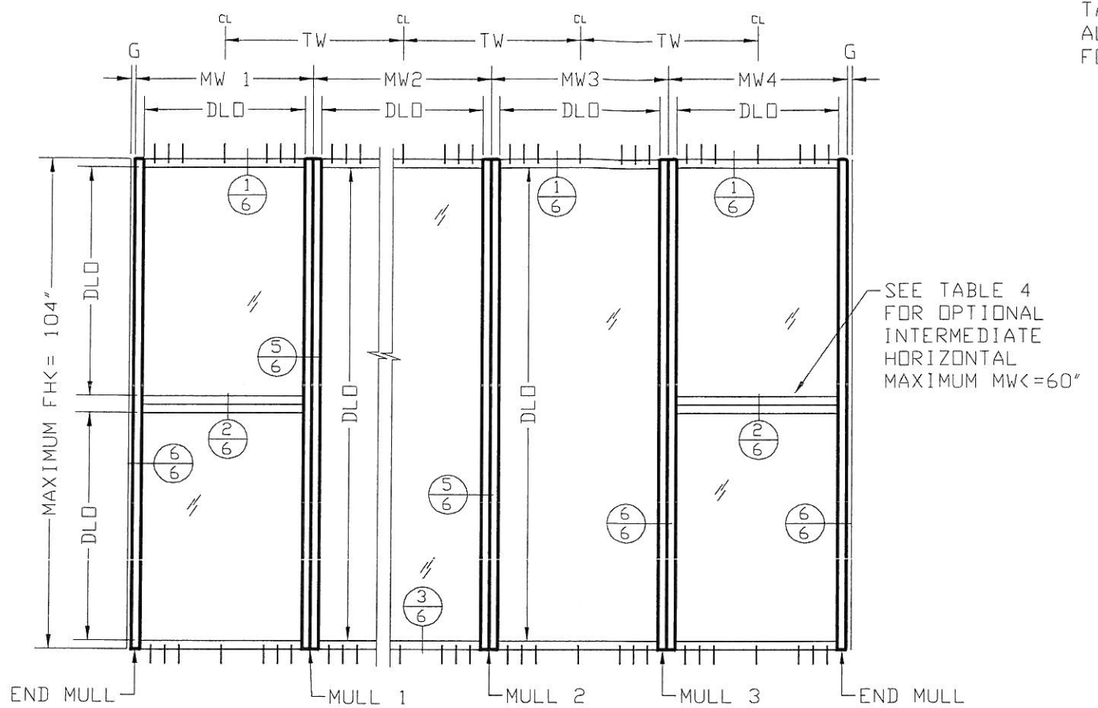

MULL 1: TW= (MW1 + MW2)/2
MULL 2: TW= (MW2 + MW3)/2
END MULL: TW= MW1 AND TW= MW4

OPTIONAL HORIZONTAL TO FIT BETWEEN
CONTINUOUS VERTICAL FRAMING

TABLE 4
ALLOWABLE PRESSURE
FOR INTERMEDIATE HORIZONTAL

TM (IN)	MW (IN)	PRESSURE ± (PSF)
36	36	102
	42	102
	48	102
	50	102
	54	96
	56	87
	66	61
42	36	102
	42	102
	48	102
	50	102
	54	87
	56	80
	60	67
48	36	102
	42	102
	48	102
	50	102
	54	82
	56	75
	60	63
52	36	102
	42	102
	48	102
	50	102
	54	81
	56	73
	60	61

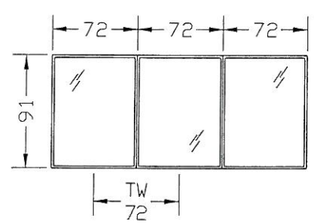

EXAMPLE: PdK= 102 PSF
MODULAR SIZE: 72X91
GLASS TYPE C1: MAX. 108 PSF (TABLE 5)
MULLION SPAN: 91"
PRESSURE: MAX. 102 PSF
JAMB GAP: >=0.38" SEALANT W/ 50% OR
>=0.25" SEALANT W/ 100% EXTENSION

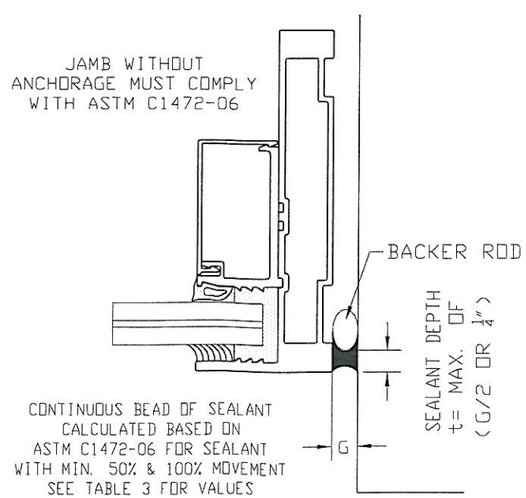

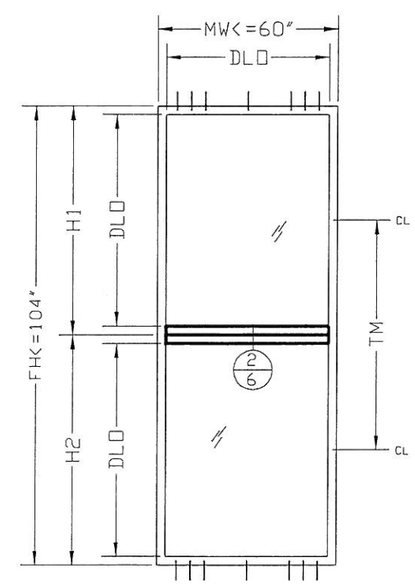

TM= (H1 + H2)/2

WINDOW TYPE III NOTES:

1- USE SHEET 5 FOR GLAZING COMPOSITION AND GLAZING DESIGN USING TABLE 5
2- USE SHEETS 7, 8 AND 10 TABLES 1.1 AND 3.1 FOR ANCHORAGE DESIGN
3- "G" END MULL MINIMUM SEAL SPACE SEE JAMB DETAIL 6. USE VALUES ACCORDINGLY WITH SEALANT ASTM C-719 EXTENSION PROPERTY 50% OR 100% EXTENSION

HMC
HURRICANE MANUFACTURING CORPORATION
11850 MIRAMAR PARKWAY
MIRAMAR - FL. - 33025
Phone: (954) 392-7933
Fax: (954) 392-7356

PRODUCT:
HMC 1000
ALUMINUM STOREFRONT

Engineering:
EngCo Inc.
CR 11234
5595 Orange Dr. 201
Davie, Fl. 33314
ENGCO@AOL.COM

STATE OF TEXAS
PEDRO FIGUEIREDO
102937
LICENSED
PROFESSIONAL ENGINEER
APR 26 2011

Engineer Seal
Pedro De Figueiredo
TEXAS - PE 102937

DRAFTING:
PK DRAFTING & MORE

Date: 04/26/2011
Scale: NA
Design by: PPMF

Drawing Number
11-086

GLAZING CONFIGURATIONS & DESIGNED LOADS

TABLE 5
ALLOWABLE PRESSURE - GLAZING PANEL

		GLAZING TYPE - IMPACT LEVEL							
A	B	LEVEL A		LEVEL D				LEVEL E	
(IN)	(IN)	A1	B1	A2	A3	B3	B4	A5	C1
48	48	130	130	60	130	130	130	130	130
	60	130	130	60	130	130	130	130	130
	72	130	130	60	130	130	130	130	130
	84	130	130	60	130	130	130	130	130
	96	130	130	60	130	130	130	130	130
	108	130	130	60	130	130	130	130	130
	120	129	128	60	129	128	130	129	130
	144	118	117	60	118	117	124	118	130
50	60	130	130	60	130	130	130	130	130
	72	130	130	60	130	130	130	130	130
	84	130	130	60	130	130	130	130	130
	96	130	130	60	130	130	130	130	130
	108	130	130	60	130	130	130	130	130
	120	122	121	60	122	121	128	122	130
	144	111	110	60	111	110	116	111	130
60	60	130	130	60	130	130	130	130	130
	72	130	130	60	130	130	130	130	130
	84	130	130	60	130	130	130	130	130
	96	129	128	60	129	128	130	129	130
	108	114	113	60	114	113	119	114	130
	120	102	101	60	102	101	107	102	130
66	60	130	130	60	130	130	130	130	130
	72	118	118	60	118	118	118	118	130
	84	118	118	60	118	118	118	118	130
	96	118	118	60	118	118	118	118	130
	109	104	103	60	104	103	109	104	130
72	60	130	130	60	130	130	130	130	130
	72	108	108	60	108	108	108	108	130
	84	108	108	60	108	108	108	108	130
	96	108	108	60	108	108	108	108	130
	100	108	107	60	108	107	108	108	130
84	60	130	130	60	130	130	130	130	130
	72	108	108	60	108	108	108	108	130
	85	93	93	60	93	93	93	93	130
96	60	129	128	60	129	128	130	129	130
	72	108	108	60	108	108	108	108	130
	75	104	104	60	104	104	104	104	130
108	60	114	113	60	114	113	119	114	130
	67	104	103	60	104	103	109	104	130
120	60	102	101	60	102	101	107	102	130

USE IN CONJUNCTION WITH TABLES 1, 2, 3 OR 4
DESIGN MUST BE CONTROLLED BY THE LOWEST
PRESSURE FROM APPLICABLE TABLES

GLAZING CONFIGURATIONS A1, A2, A3, A5, B4 AND C
COMPLY WITH ANSI Z97.1

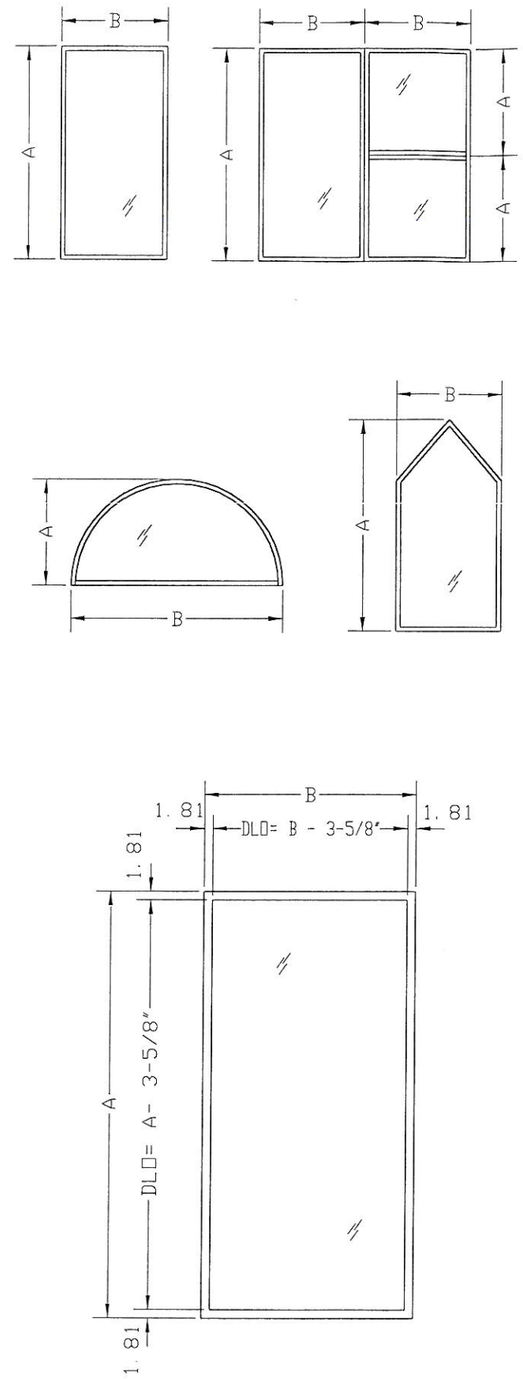

TYPE A - 9/16" LAMINATED IMPACT GLASS			
TYPE	MANUFACTURER	INTERLAYER	IMPACT CLASSIFICATION
A1	SOLUTIA	.06" PVB	LEVEL A
A2	SOLUTIA	.09" PVB	LEVEL D
A3	SOLUTIA	.075 VANCEVA	LEVEL D
A5	VIRACON	HRG II	LEVEL E (80ft/s)

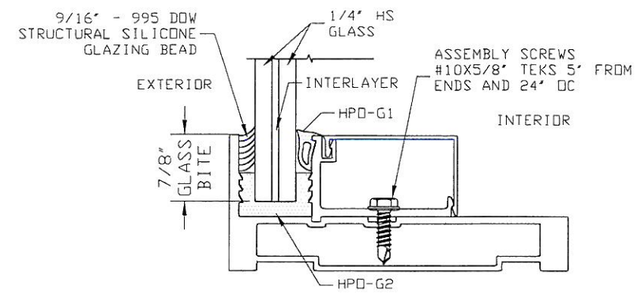

TYPE B - 1 5/16" LAM. INSULATED IMPACT GLASS			
TYPE	MANUFACTURER	INTERLAYER	IMPACT CLASSIFICATION
B1	SOLUTIA	.060" PVB	LEVEL A
B3	SOLUTIA	.075" VANCEVA	LEVEL D
B4	SOLUTIA	.077" VANCEVA	LEVEL D

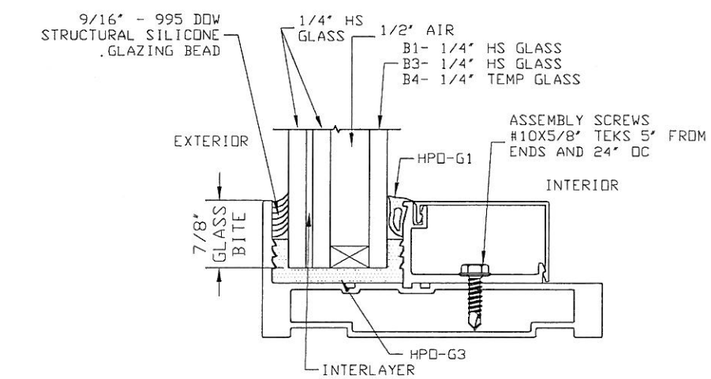

TYPE C - 1 5/8" LAM. DOUBLE INSULATED IMPACT GLASS			
TYPE	MANUFACTURER	INTERLAYERS	IMPACT CLASSIFICATION
C1	VIRACON	.075" VANCEVA .10 STORMGUARD	LARGE LEVEL E (80ft/S)

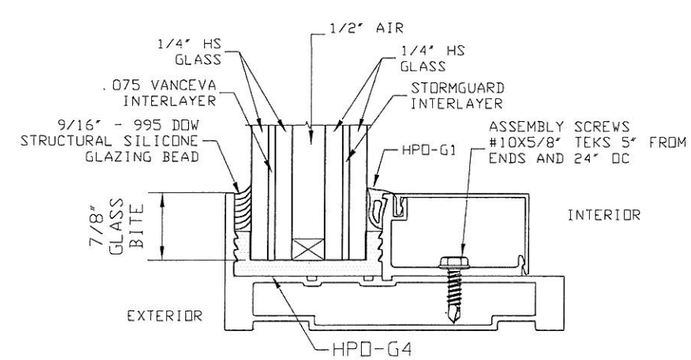

H M C
HURRICANE
MANUFACTURING
CORPORATION

11850 MIRAMAR PARKWAY
MIRAMAR - FL. - 33025
Phone: (954) 392-7933
Fax: (954) 392-7356

PRODUCT:
HMC 1000
ALUMINUM STOREFRONT

Engineering:
EngCo Inc.
CR 11234
5595 Orange Dr. 201
Davie, Fl. 33314
ENGCO@AOL.COM

STATE OF TEXAS
PEDRO FIGUEIREDO
102937
LICENSED
PROFESSIONAL ENGINEER
APR 26 2011

Engineer Seal
Pedro De Figueiredo
TEXAS - PE 102937

DRAFTING:
PK DRAFTING & MORE

Date: 04/26/2011
Scale: NA
Design by: PPMF

Drawing Number
11-086

SHEET
5 of 12

SECTION DETAILS

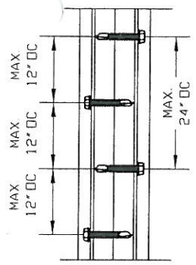

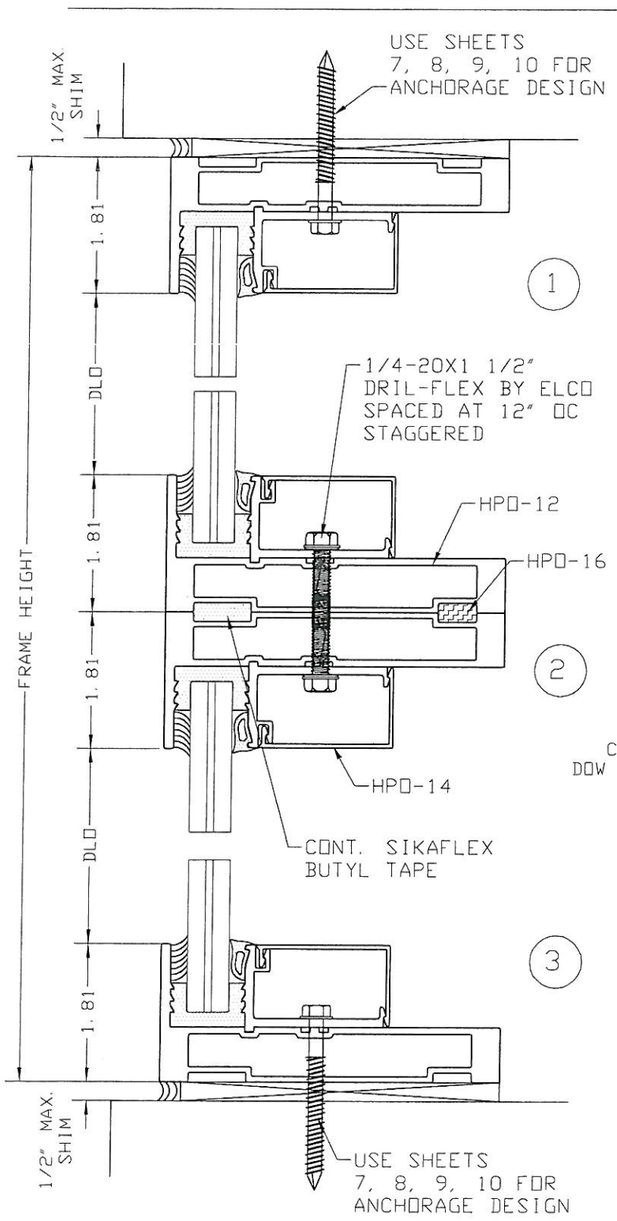

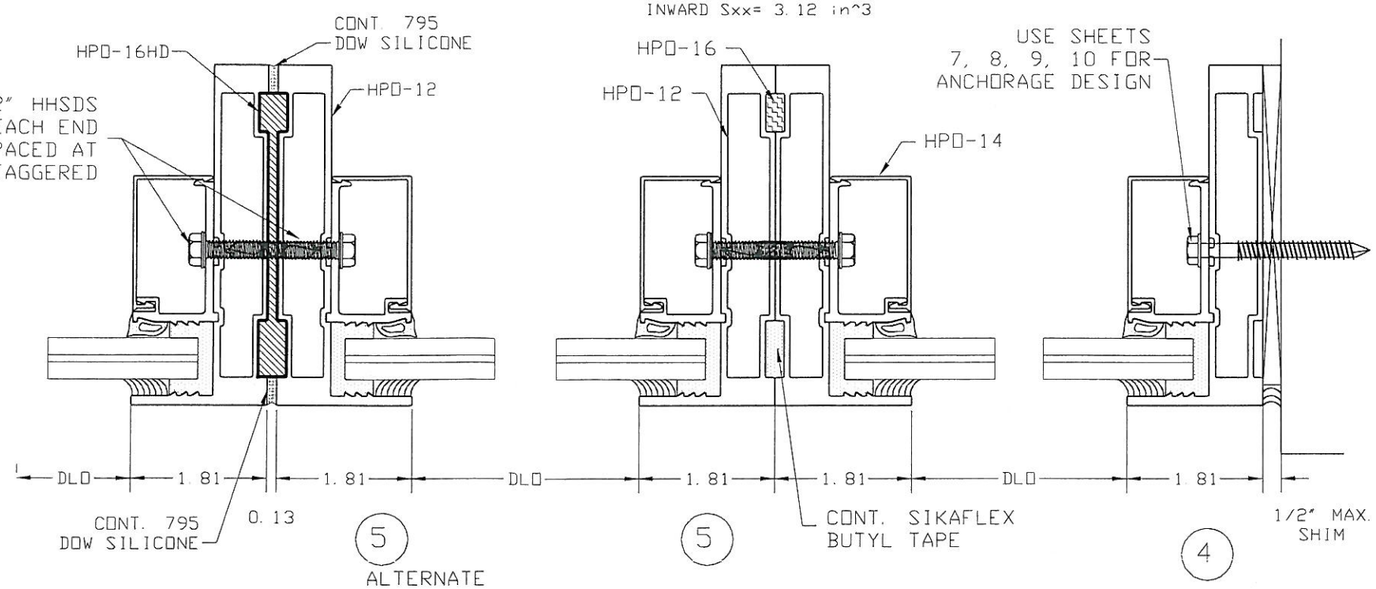

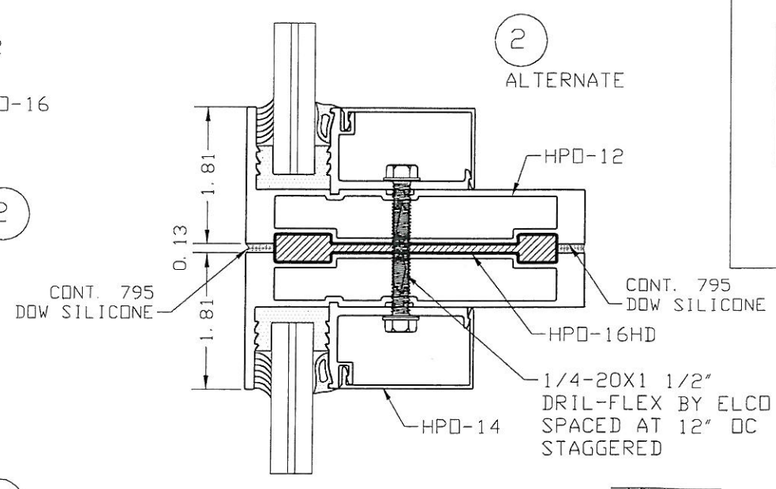

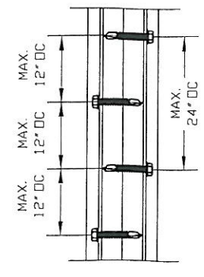

EXAMPLE PERIMETER SEALANT OPTIONS:

BRAND	ASTM C719 EXTENSION
DOW CORNING 795	50%
DOW CORNING 790	100%
TREMCO SPECTREM 2 & 3	50%
TREMCO SPECTREM 1	100%

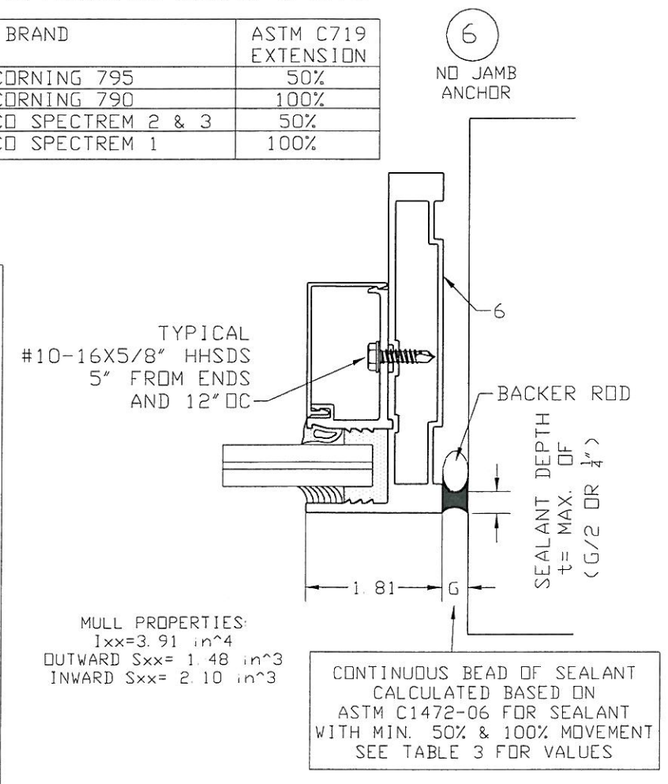

HMC
HURRICANE MANUFACTURING CORPORATION
11850 MIRAMAR PARKWAY
MIRAMAR - FL. - 33025
Phone: (954) 392-7933
Fax: (954) 392-7356

PRODUCT:
HMC 1000
ALUMINUM STOREFRONT

Engineering:
EngCo Inc.
CR 11234
5595 Orange Dr. 201
Davie, Fl. 33314
ENGCO@AOL.COM

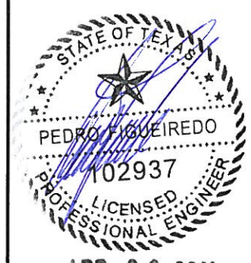

APR 26 2011

Engineer Seal
Pedro De Figueiredo
TEXAS - PE 102937

DRAFTING:
PK DRAFTING & MORE

Date: 04/26/2011
Scale: NA
Design by: PPMF

Drawing Number
11-086

FRAMING ANCHORAGE OPTIONS

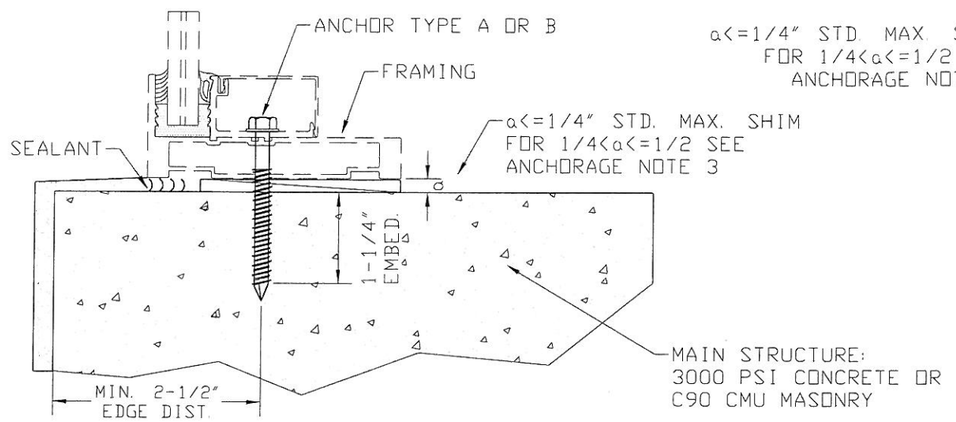

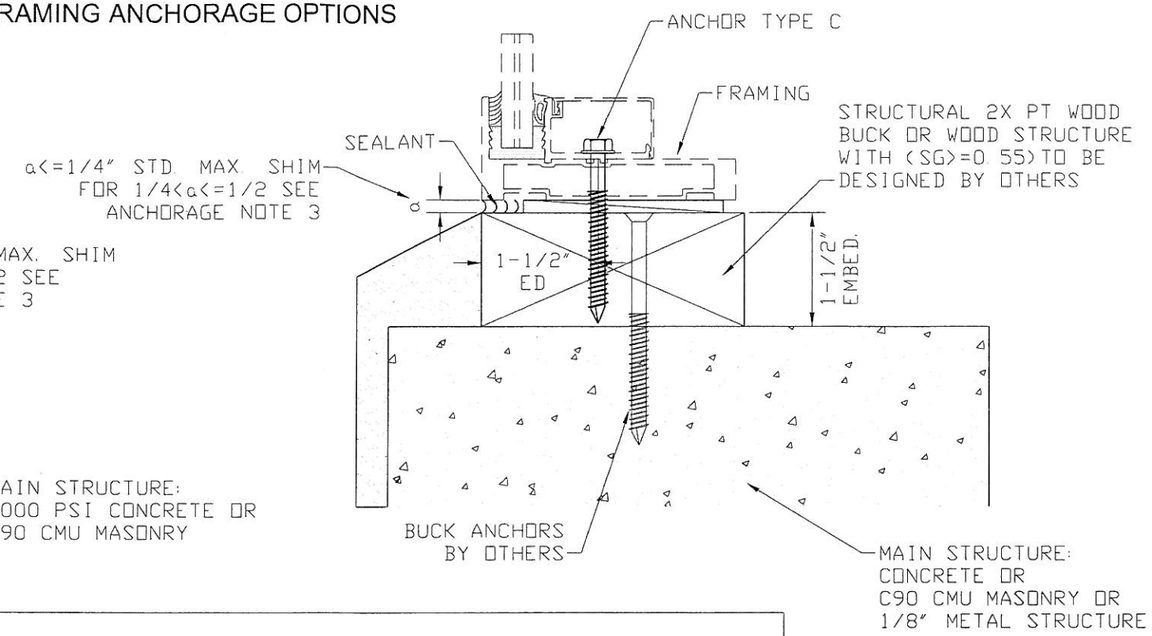

ANCHORAGE NOTES:

1- PERIMETER FRAMING ANCHORAGE APPLICABLE FOR SILL, JAMB OR HEADER
2- USE ANCHORAGE OPTIONS WITH SHEETS 8, 9 OR 10 TO DESIGN ANCHORAGE SPACING AND LAY-OUT.
3- SHIM SPACING CAN BE INCREASED UP TO 1/2". SEE OPTION "*" ON TABLES 1.1, 2.1 AND 3.1

ANCHORAGE OPTIONS:

A- 1/4" ss ITW TAPCON 1-1/4" DIRECTLY INTO 3000 PSI CONCRETE
B- 1/4" ss ITW TAPCON 1-1/4" DIRECTLY INTO MASONRY
C- 1/4" ss ITW TAPCON OR 1/4" ss SMS 1 1/2" DIRECTLY INTO MIN. 2X WOOD STRUCTURE (SG>=0.55)
D- 1/4" ss SMS DIRECTLY INTO MIN. 1/8" METAL STRUCTURE (6063-T5 ALUM. OR ASTM A36 STEEL)
E- ALL ANCHORS ABOVE INSTALLED THROUGH 1X PT INTO MAIN STRUCTURE

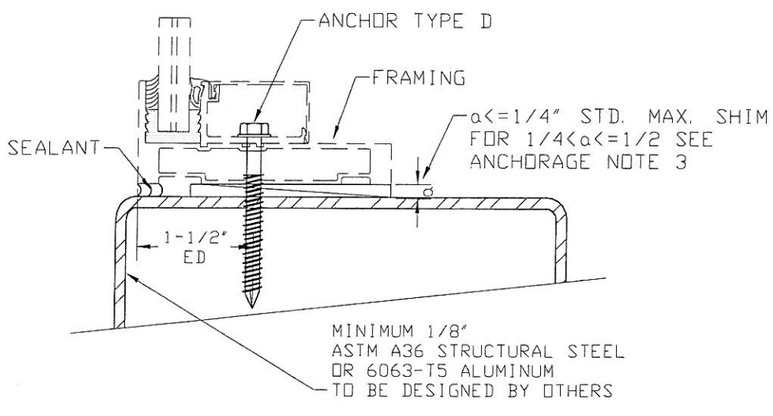

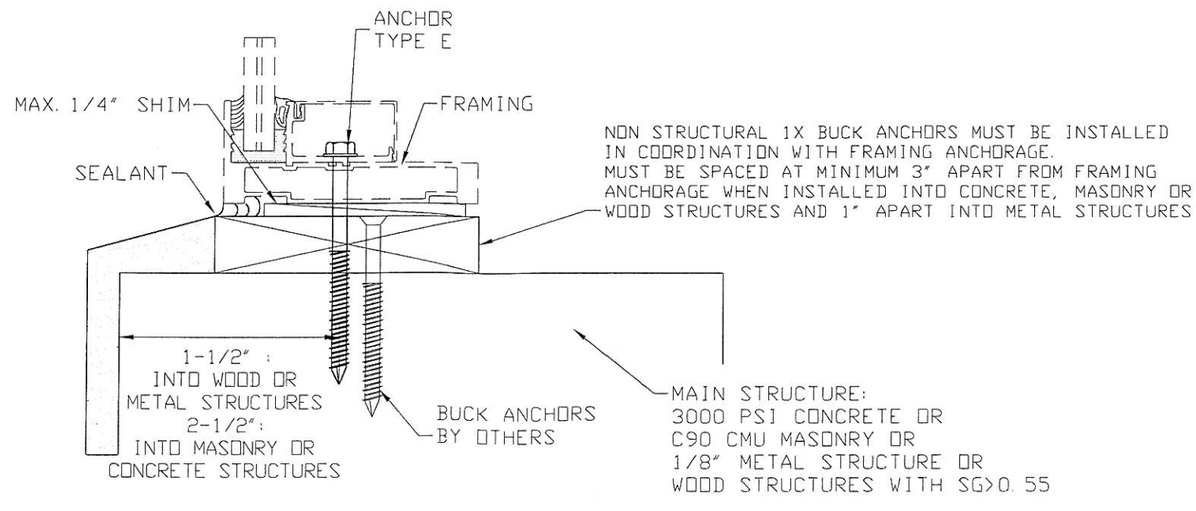

HMC
HURRICANE MANUFACTURING CORPORATION
11850 MIRAMAR PARKWAY
MIRAMAR - FL. - 33025
Phone: (954) 392-7933
Fax: (954) 392-7356

PRODUCT:
HMC 1000
ALUMINUM STOREFRONT

Engineering:
EngCo Inc.
CR 11234
5595 Orange Dr. 201
Davie, Fl. 33314
ENGCO@AOL.COM

STATE OF TEXAS
PEDRO FIGUEIREDO
102937
LICENSED
PROFESSIONAL ENGINEER
APR 26 2011

Engineer Seal
Pedro De Figueiredo
TEXAS - PE 102937

DRAFTING:
PK DRAFTING & MORE

Date: 04/26/2011
Scale: NA
Design by: PPMF

Drawing Number
11-086

TYPE I - SINGLE PANEL UNITS
ANCHORAGE DESIGN

TABLE 1.1 - TYPE I & II WINDOWS
MAXIMUM ANCHORAGE SPACING "S" (IN ON CENTERS)

ANCHORAGE TYPE SEE SHEET 7 AND NOTES BELOW FOR DESCRIPTION

A (IN)	B (IN)	Pd PSF	ANCHOR TYPE A	B	C	D	E	*	Pd PSF	ANCHOR TYPE A	B	C	D	E	*	Pd PSF	ANCHOR TYPE A	B	C	D	E	*
48	48	130	12	12	12	12	10	7	80	12	12	12	12	12	12	60	12	12	12	12	12	12
	60	130	12	12	12	12	10	7	80	12	12	12	12	12	12	60	12	12	12	12	12	12
	72	130	12	12	12	12	10	7	80	12	12	12	12	12	12	60	12	12	12	12	12	12
	84	130	12	12	12	12	10	7	80	12	12	12	12	12	12	60	12	12	12	12	12	12
	96	130	12	12	12	12	10	7	80	12	12	12	12	12	12	60	12	12	12	12	12	12
	108	130	12	12	12	12	10	7	80	12	12	12	12	12	12	60	12	12	12	12	12	12
	120	130	12	12	12	12	10	7	80	12	12	12	12	12	12	60	12	12	12	12	12	12
	144	130	12	12	12	12	10	7	80	12	12	12	12	12	12	60	12	12	12	12	12	12
50	60	130	12	12	11	12	9	7	80	12	12	12	12	12	11	60	12	12	12	12	12	12
	72	130	12	12	11	12	9	7	80	12	12	12	12	12	11	60	12	12	12	12	12	12
	84	130	12	12	11	12	9	7	80	12	12	12	12	12	11	60	12	12	12	12	12	12
	96	130	12	12	11	12	9	7	80	12	12	12	12	12	11	60	12	12	12	12	12	12
	108	130	12	12	11	12	9	7	80	12	12	12	12	12	11	60	12	12	12	12	12	12
	120	130	12	12	11	12	9	7	80	12	12	12	12	12	11	60	12	12	12	12	12	12
	144	130	12	12	11	12	9	7	80	12	12	12	12	12	11	60	12	12	12	12	12	12
60	60	130	11	10	9	12	8	5	80	12	12	12	12	12	9	60	12	12	12	12	12	12
	72	130	11	10	9	12	8	5	80	12	12	12	12	12	9	60	12	12	12	12	12	12
	84	130	11	10	9	12	8	5	80	12	12	12	12	12	9	60	12	12	12	12	12	12
	96	130	11	10	9	12	8	5	80	12	12	12	12	12	9	60	12	12	12	12	12	12
	108	130	11	10	9	12	8	5	80	12	12	12	12	12	9	60	12	12	12	12	12	12
	120	130	11	10	9	12	8	5	80	12	12	12	12	12	9	60	12	12	12	12	12	12
66	60	130	11	10	9	12	8	5	80	12	12	12	12	12	9	60	12	12	12	12	12	12
	72	118	11	10	9	12	8	5	80	12	12	12	12	12	8	60	12	12	12	12	12	11
	84	118	11	10	9	12	8	5	80	12	12	12	12	12	8	60	12	12	12	12	12	11
	96	118	11	10	9	12	8	5	80	12	12	12	12	12	8	60	12	12	12	12	12	11
	109	118	11	10	9	12	8	5	80	12	12	12	12	12	8	60	12	12	12	12	12	11
72	60	130	11	10	9	12	8	5	80	12	12	12	12	12	9	60	12	12	12	12	12	12
	72	108	11	10	9	12	8	5	80	12	12	12	12	11	8	60	12	12	12	12	12	10
	84	108	11	10	9	12	8	5	80	12	12	12	12	11	8	60	12	12	12	12	12	10
	96	108	11	10	9	12	8	5	80	12	12	12	12	11	8	60	12	12	12	12	12	10
	100	108	11	10	9	12	8	5	80	12	12	12	12	11	8	60	12	12	12	12	12	10
84	60	130	11	10	9	12	8	5	80	12	12	12	12	12	9	60	12	12	12	12	12	12
	72	108	11	10	9	12	8	5	80	12	12	12	12	11	8	60	12	12	12	12	12	10
	85	93	11	10	9	12	8	5	80	12	11	11	12	9	6	60	12	12	12	12	12	9
96	60	130	11	10	9	12	8	5	80	12	12	12	12	12	9	60	12	12	12	12	12	12
	72	108	11	10	9	12	8	5	80	12	12	12	12	11	8	60	12	12	12	12	12	10
	75	104	11	10	9	12	8	5	80	12	12	12	12	10	7	60	12	12	12	12	12	10
108	60	130	11	10	9	12	8	5	80	12	12	12	12	12	9	60	12	12	12	12	12	12
	67	117	11	10	9	12	8	5	80	12	12	12	12	11	8	60	12	12	12	12	12	11
120	60	130	11	10	9	12	8	5	80	12	12	12	12	12	9	60	12	12	12	12	12	12

EXAMPLE:
ANCHORAGE TYPE: C AS PER SHEET 7
SPACING: 9" OC
MODULAR SIZE: 60X120
PRESSURE: MAX. 130 PSF

TYPICAL MINIMUM ANCHOR SPACING: (S)
USE TABLE 1.1

EXAMPLE 1:
A= 84", B= 85" PD<= 80 PSF
S<= 6" OC FOR ANCHORAGE TYPE "*"
S<= 11" OC FOR ANCHORAGE TYPE B

EXAMPLE 2:
A= 84", B= 85" PD<= 60 PSF
S<= 9" OC FOR ANCHORAGE TYPE "*"
S<= 12" OC FOR ANCHORAGE TYPE B

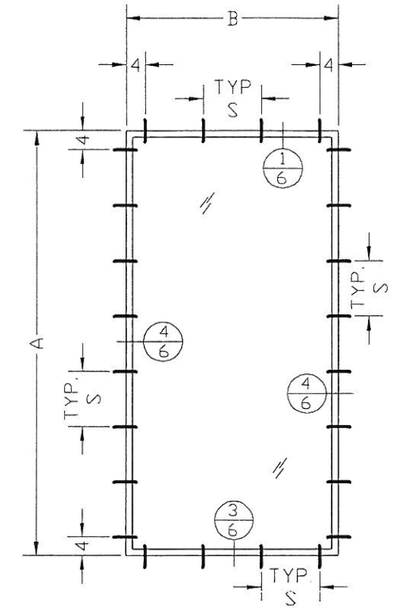

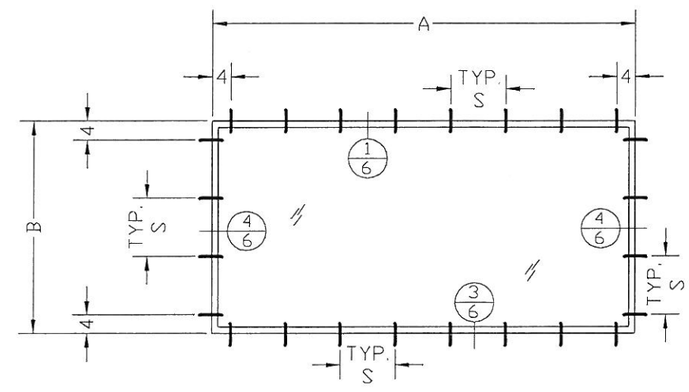

EXAMPLE:
ANCHORAGE TYPE: A, B, C OR D WITH 1/2" SHIM
SPACING: 9" OC
MODULAR SIZE: 84X85
PRESSURE: MAX. 60 PSF

ANCHOR OPTIONS:

A- 1/4" ss ITW TAPCON 1-1/4" DIRECTLY INTO 3000 PSI CONCRETE
B- 1/4" ss ITW TAPCON 1-1/4" DIRECTLY INTO MASONRY
C- 1/4" ss ITW TAPCON OR 1/4" ss SMS 1 1/2" DIRECTLY INTO MIN. 2X WOOD STRUCTURE (SG>=0.55)
D- 1/4" ss SMS DIRECTLY INTO MIN. 1/8" METAL STRUCTURE (6063-T5 ALUM. OR ASTM A36 STEEL)
E- ALL ANCHORS ABOVE INSTALLED THROUGH 1X PT INTO MAIN STRUCTURE

NOTES:
1- ANCHOR TYPE E: 1X ANCHOR SPACING MUST BE COORDINATED WITH FRAMING ANCHORAGE SPACING.
2- MAXIMUM SHIM SPACING FOR ANCHOR TYPES A, B, C, D OR E IS 1/4"
3- "*": ANCHORS TYPE A, B, C OR D WITH SHIM SPACING GREATER THAN 1/4" BUT LESS OR EQUAL 1/2".

HMC
HURRICANE MANUFACTURING CORPORATION
11850 MIRAMAR PARKWAY
MIRAMAR - FL. - 33025
Phone: (954) 392-7933
Fax: (954) 392-7356

PRODUCT:
HMC 1000
ALUMINUM STOREFRONT

Engineering:
EngCo Inc.
CR 11234
5595 Orange Dr. 201
Davie, Fl. 33314
ENGCO@AOL.COM

STATE OF TEXAS
PEDRO FIGUEIREDO
102937
LICENSED
PROFESSIONAL ENGINEER
APR 26 2011
Engineer Seal
Pedro De Figueiredo
TEXAS - PE 102937

DRAFTING:
PK DRAFTING & MORE

Date: 04/26/2011
Scale: NA
Design by: PPMF

Drawing Number
11-086

TYPE II - COMBINED SINGLE PANEL UNITS
ANCHORAGE DESIGN

TABLE 2.1 - TYPE II WINDOW
MAXIMUM # OF ANCHORS PER CLUSTER

ANCHORAGE TYPE SEE SHEET 7 AND NOTES BELOW FOR DESCRIPTION

B (IN)	A (IN)	Pd (PSF)	ANCHOR TYPE A	B	C	D	*	E	Pd (PSF)	ANCHOR TYPE A	B	C	D	*	E	Pd (PSF)	ANCHOR TYPE A	B	C	D	*	E
48	48	130	2	2	2	2	4	6	80	2	2	2	2	2	4	60	2	2	2	2	2	4
	60	130	4	4	4	2	6	8	80	2	2	2	2	4	6	60	2	2	2	2	4	4
	72	102	4	4	4	2	6	8	80	2	4	4	2	4	6	60	2	2	2	2	4	6
	84	81	4	4	4	2	6	8	80	4	4	4	2	6	8	60	2	4	4	2	4	6
	96	68	4	4	4	2	6	8	68	4	4	4	2	6	8	60	4	4	4	2	6	8
	104	61	4	4	4	2	6	8	61	4	4	4	2	6	8	60	4	4	4	2	6	8
50	60	130	4	4	4	2	6	8	80	2	2	2	2	4	6	60	2	2	2	2	4	4
	72	100	4	4	4	2	6	8	80	4	4	4	2	6	6	60	2	2	2	2	4	6
	84	79	4	4	4	2	6	8	79	4	4	4	2	6	8	60	2	4	4	2	4	6
	96	66	4	4	4	2	6	8	66	4	4	4	2	6	8	60	4	4	4	2	6	8
	104	59	4	4	4	2	6	8	59	4	4	4	2	6	8	59	4	4	4	2	6	8
60	60	130	4	4	4	2	6	8	80	2	2	2	2	4	6	60	2	2	2	2	4	4
	72	93	4	4	4	2	6	8	80	4	4	4	2	6	8	60	2	2	2	2	4	6
	84	72	4	4	4	2	6	8	72	4	4	4	2	6	8	60	4	4	4	2	6	6
	96	59	4	4	4	2	6	8	59	4	4	4	2	6	8	59	4	4	4	2	6	8
66	60	130	4	4	4	2	6	8	80	2	2	2	2	4	6	60	2	2	2	2	4	4
	72	91	4	4	4	2	6	8	80	4	4	4	2	6	8	60	2	2	4	2	4	6
	84	70	4	4	4	2	6	8	70	4	4	4	2	6	8	60	4	4	4	2	6	8
	93	59	4	4	4	2	6	8	59	4	4	4	2	6	8	59	4	4	4	2	6	8
72	60	130	4	4	4	2	6	8	80	2	2	2	2	4	6	60	2	2	2	2	4	4
	72	90	4	4	4	2	6	8	80	4	4	4	2	6	8	60	2	2	4	2	4	6
	84	68	4	4	4	2	6	8	68	4	4	4	2	6	8	60	4	4	4	2	6	8
	91	59	4	4	4	2	6	8	59	4	4	4	2	6	8	59	4	4	4	2	6	8
84	60	130	4	4	4	2	6	8	80	2	2	2	2	4	6	60	2	2	2	2	4	4
	72	90	4	4	4	2	6	8	80	4	4	4	2	6	8	60	2	2	4	2	4	6
	84	66	4	4	4	2	6	8	66	4	4	4	2	6	8	60	4	4	4	2	6	8
	86	64	4	4	4	2	6	8	64	4	4	4	2	6	8	60	4	4	4	2	6	8
96	60	130	4	4	4	2	6	8	80	2	2	2	2	4	6	60	2	2	2	2	4	4
	72	90	4	4	4	2	6	8	80	4	4	4	2	6	8	60	2	2	4	2	4	6
	75	83	4	4	4	2	6	8	80	4	4	4	2	6	8	60	2	4	4	2	4	6
108	60	130	4	4	4	2	6	8	80	2	2	2	2	4	6	60	2	2	2	2	4	4
	67	105	4	4	4	2	6	8	80	2	4	4	2	4	6	60	2	2	2	2	4	6
120	60	130	4	4	4	2	6	8	80	2	2	2	2	4	6	60	2	2	2	2	4	4
144	50	130	2	4	4	2	4	6	80	2	2	2	2	4	4	60	2	2	2	2	2	4

EXAMPLE: ANCHORAGE TYPE: A, B, C OR D
AS PER SHEET 7 WITH 1/2" SHIM
OF ANCHORS / CLUSTER: 4
MODULAR SIZE: 144X50 - MULL SPAN: 50"
MAX. PRESSURE: 80 PSF

EXAMPLE: ANCHORAGE TYPE: C
AS PER SHEET 7 W/ 1/4" SHIM
OF ANCHORS / CLUSTER: 4
MODULAR SIZE: 144X50 - MULL SPAN: 50"
MAX. PRESSURE: 130 PSF

EXAMPLE: ANCHORAGE TYPE: A
AS PER SHEET 7 WITH 1/4" SHIM
OF ANCHORS / CLUSTER: 2
MODULAR SIZE: 144X50 - MULL SPAN: 50"
MAX. PRESSURE: 80 PSF

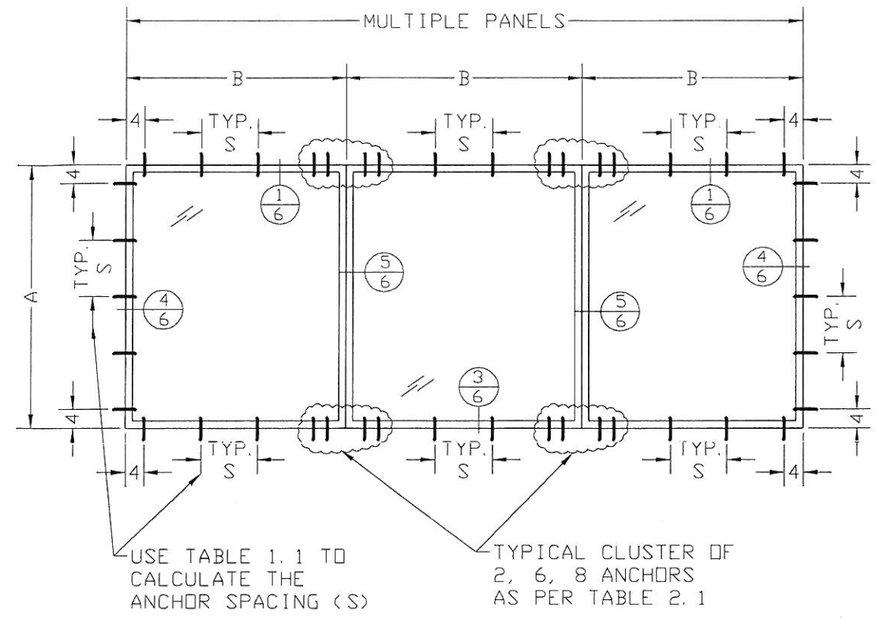

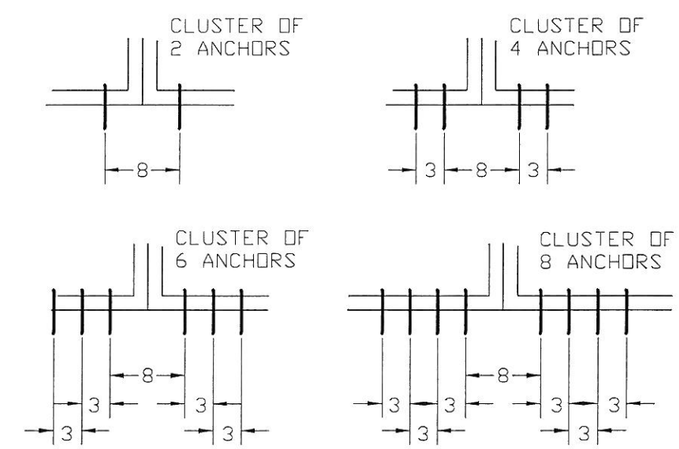

NOTES:
1- IN LOCATIONS WHERE ANCHORS ARE PLACED IN CLUSTERS, ANCHOR TYPE E, IS DESIGNED FOR 3/4" CANTILEVER CONSIDERING THE 1X JUST AS A FILLER. ALL OTHER LOCATIONS 1X BUCK MUST BE PROPERLY SECURED TO THE SUBSTRATE AND IN COORDINATION WITH FRAMING ANCHORAGE.
2- MAXIMUM SHIM SPACING FOR ANCHOR TYPES A, B, C, D OR E IS 1/4"
3- "*": ANCHORS TYPE A, B, C OR D WITH SHIM SPACING GREATER THAN 1/4" BUT LESS OR EQUAL 1/2".

ANCHOR OPTIONS:

A- 1/4" ss ITW TAPCON 1-1/4" DIRECTLY INTO 3000 PSI CONCRETE
B- 1/4" ss ITW TAPCON 1-1/4" DIRECTLY INTO MASONRY
C- 1/4" ss ITW TAPCON OR 1/4" ss SMS 1 1/2" DIRECTLY INTO MIN. 2X WOOD STRUCTURE (SG>=0.55)
D- 1/4" ss SMS DIRECTLY INTO MIN. 1/8" METAL STRUCTURE (6063-T5 ALUM. OR ASTM A36 STEEL)
E- ALL ANCHORS ABOVE INSTALLED THROUGH 1X PT INTO MAIN STRUCTURE

HMC
HURRICANE MANUFACTURING CORPORATION
11850 MIRAMAR PARKWAY
MIRAMAR - FL. - 33025
Phone: (954) 392-7933
Fax: (954) 392-7356

PRODUCT:
HMC 1000
ALUMINUM STOREFRONT

Engineering:
EngCo Inc.
CR 11234
5595 Orange Dr. 201
Davie, Fl. 33314
ENGCO@AOL.COM

STATE OF TEXAS
PEDRO FIGUEIREDO
102937
LICENSED
PROFESSIONAL ENGINEER
APR 26 2011

Engineer Seal
Pedro De Figueiredo
TEXAS - PE 102937

DRAFTING:
PK DRAFTING & MORE

Date: 04/26/2011
Scale: NA
Design by: PPMF

Drawing Number
11-086

TYPE III - MULTIPLE PANEL UNITS
ANCHORAGE DESIGN

TABLE 3.1 - TYPE III WINDOW
MAXIMUM # OF ANCHORS PER CLUSTER

TW (IN)	FH (IN)	Pd (PSF)	ANCHOR TYPE A	B	C	D	*	E	Pd (PSF)	ANCHOR TYPE A	B	C	D	*	E	Pd (PSF)	ANCHOR TYPE A	B	C	D	*	E
48	48	130	6	6	6	6	6	6	80	6	6	6	6	6	6	60	6	6	6	6	6	6
	60	130	6	6	6	6	6	8	80	6	6	6	6	6	6	60	6	6	6	6	6	6
	72	130	6	6	6	6	8	10	80	6	6	6	6	6	6	60	6	6	6	6	6	6
	84	130	6	6	6	6	10	12	80	6	6	6	6	6	8	60	6	6	6	6	6	6
	96	117	6	6	6	6	10	14	80	6	6	6	6	6	10	60	6	6	6	6	6	8
	104	100	6	6	6	6	10	12	80	6	6	6	6	8	10	60	6	6	6	6	6	8
50	60	130	6	6	6	6	6	8	80	6	6	6	6	6	6	60	6	6	6	6	6	6
	72	130	6	6	6	6	8	10	80	6	6	6	6	6	6	60	6	6	6	6	6	6
	84	130	6	6	6	6	10	12	80	6	6	6	6	6	8	60	6	6	6	6	6	6
	96	113	6	6	6	6	10	14	80	6	6	6	6	8	10	60	6	6	6	6	6	8
	104	97	6	6	6	6	10	12	80	6	6	6	6	8	10	60	6	6	6	6	6	8
60	60	130	6	6	6	6	6	8	80	6	6	6	6	6	6	60	6	6	6	6	6	6
	72	130	6	6	6	6	8	10	80	6	6	6	6	6	8	60	6	6	6	6	6	6
	84	124	6	6	6	6	10	14	80	6	6	6	6	6	8	60	6	6	6	6	6	6
	96	102	6	6	6	6	10	14	80	6	6	6	6	8	10	60	6	6	6	6	6	8
66	60	130	6	6	6	6	6	8	80	6	6	6	6	6	6	60	6	6	6	6	6	6
	72	130	6	6	6	6	8	12	80	6	6	6	6	6	8	60	6	6	6	6	6	6
	84	120	6	6	6	6	10	14	80	6	6	6	6	6	10	60	6	6	6	6	6	8
	93	102	6	6	6	6	10	14	80	6	6	6	6	8	10	60	6	6	6	6	6	8
72	60	130	6	6	6	6	6	8	80	6	6	6	6	6	6	60	6	6	6	6	6	6
	72	130	6	6	6	6	8	12	80	6	6	6	6	6	8	60	6	6	6	6	6	6
	84	117	6	6	6	6	10	14	80	6	6	6	6	6	10	60	6	6	6	6	6	8
	91	102	6	6	6	6	10	14	80	6	6	6	6	8	10	60	6	6	6	6	6	8
84	60	130	6	6	6	6	6	8	80	6	6	6	6	6	6	60	6	6	6	6	6	6
	72	130	6	6	6	6	8	12	80	6	6	6	6	6	8	60	6	6	6	6	6	6
	84	114	6	6	6	6	10	14	80	6	6	6	6	8	10	60	6	6	6	6	6	8
	86	110	6	6	6	6	10	14	80	6	6	6	6	8	10	60	6	6	6	6	6	8
96	60	130	6	6	6	6	6	8	80	6	6	6	6	6	6	60	6	6	6	6	6	6
	72	130	6	6	6	6	8	12	80	6	6	6	6	6	8	60	6	6	6	6	6	6
	75	130	6	6	6	6	8	12	80	6	6	6	6	6	8	60	6	6	6	6	6	6
108	60	130	6	6	6	6	6	8	80	6	6	6	6	6	6	60	6	6	6	6	6	6
	67	130	6	6	6	6	8	10	80	6	6	6	6	6	6	60	6	6	6	6	6	6
120	60	130	6	6	6	6	6	8	80	6	6	6	6	6	6	60	6	6	6	6	6	6
144	50	130	6	6	6	6	6	6	80	6	6	6	6	6	6	60	6	6	6	6	6	6

EXAMPLE:
ANCHORAGE TYPE A, B, C OR D
AS PER SHEET 7 WITH 1/2" SHIM
OF ANCHORS / CLUSTER: 8
SIZE: 108X67 - MULL SPAN: 67"
MAX. PRESSURE TABLE 3: 130 PSF

EXAMPLE: ANCHORAGE TYPE C
AS PER SHEET 7 WITH 1/4" SHIM
OF ANCHORS / CLUSTER: 6
SIZE: 108X67 - MULL SPAN: 67"
MAX. PRESSURE: 60 PSF

USE MW=A AND FH=B ON TABLE 1.1
TO CALCULATE THE MAXIMUM ANCHOR
SPACING (S) BETWEEN CLUSTERS

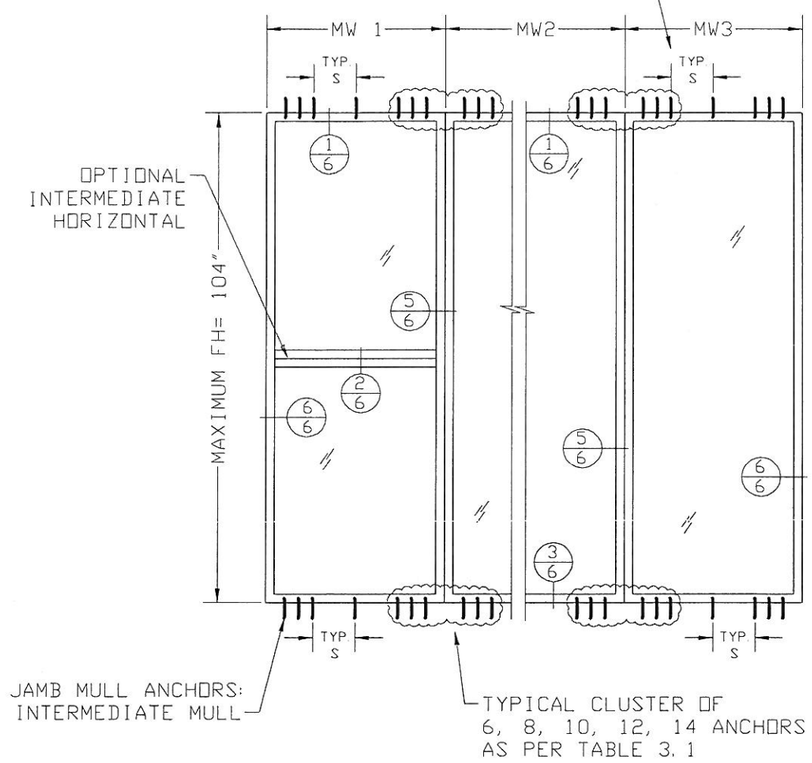

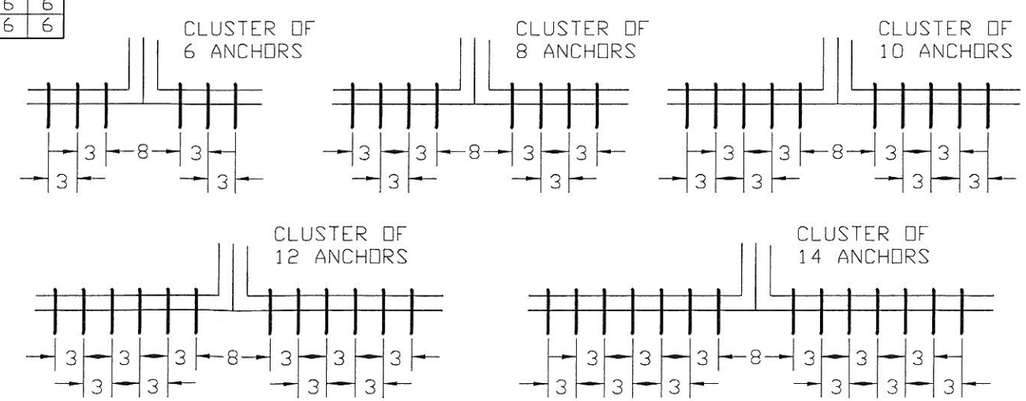

NOTES:
1- IN LOCATIONS WHERE ANCHORS ARE PLACED IN CLUSTERS, ANCHOR TYPE E, IS DESIGNED FOR 3/4" CANTILEVER CONSIDERING THE 1X JUST AS A FILLER. ALL OTHER LOCATIONS 1X BUCK MUST BE PROPERLY SECURED TO THE SUBSTRATE AND IN COORDINATION WITH FRAMING ANCHORAGE.
2- MAXIMUM SHIM SPACING FOR ANCHOR TYPES A, B, C, D OR E IS 1/4"
3- "*": ANCHORS TYPE A, B, C OR D WITH SHIM SPACING GREATER THAN 1/4" BUT LESS OR EQUAL 1/2".

ANCHOR OPTIONS:

A- 1/4" ss ITW TAPCON 1-1/4" DIRECTLY INTO 3000 PSI CONCRETE
B- 1/4" ss ITW TAPCON 1-1/4" DIRECTLY INTO MASONRY
C- 1/4" ss ITW TAPCON OR 1/4" ss SMS 1 1/2" DIRECTLY INTO MIN. 2X WOOD STRUCTURE (SG>=0.55)
D- 1/4" ss SMS DIRECTLY INTO MIN. 1/8" METAL STRUCTURE (6063-T5 ALUM. OR ASTM A36 STEEL)
E- ALL ANCHORS ABOVE INSTALLED THROUGH 1X PT INTO MAIN STRUCTURE

H M C
HURRICANE MANUFACTURING CORPORATION
11850 MIRAMAR PARKWAY
MIRAMAR - FL. - 33025
Phone: (954) 392-7933
Fax: (954) 392-7356

PRODUCT:
HMC 1000
ALUMINUM STOREFRONT

Engineering:
EngCo Inc.
CR 11234
5595 Orange Dr. 201
Davie, Fl. 33314
ENGCO@AOL.COM

STATE OF TEXAS
PEDRO FIGUEIREDO
102937
LICENSED PROFESSIONAL ENGINEER

APR 26 2011

Engineer Seal
Pedro De Figueiredo
TEXAS - PE 102937

DRAFTING:
PK DRAFTING & MORE

Date: 04/26/2011
Scale: NA
Design by: PPMF

Drawing Number
11-086

WINDOW COMPONENTS

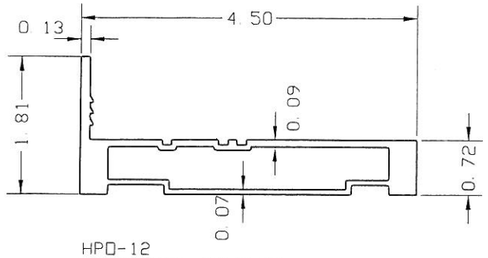

HPO-12
PERIMETER FRAMING
ALLOY: 6063-T6

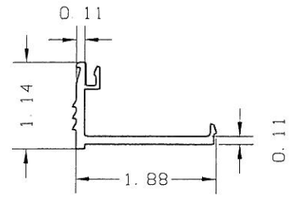

HPO-13
GLAZING STOP
ALLOY: 6063-T6

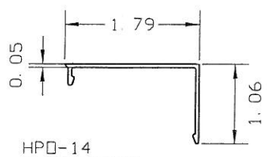

HPO-14
SNAP COVER
ALLOY: 6063-T5

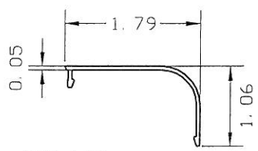

HPO-14R
ROUND SNAP COVER
ALLOY: 6063-T5

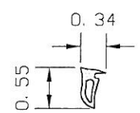

HPO-G1
GLAZING GASKET

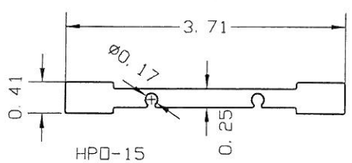

HPO-15
SHEAR CLIP
ALLOY: 6005-T5

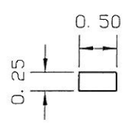

HPO-16
CONNECTING
MULLIONS BARS
ALLOY: 6063-T6

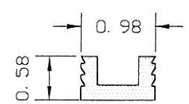

HPO-G2 9/16"
GLAZING GASKET

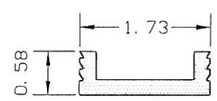

HPO-G3 1 5/16"
GLAZING GASKET

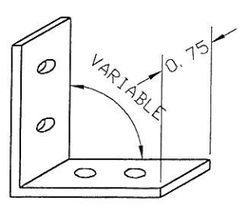

HPO-17
1/8-2X2X3/4"
CORNER CLIP WITH
(4)#10-32X1/2" SCREWS
ALLOY: 6063-T5

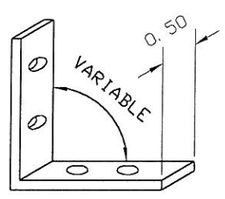

HPO-17A
1/8-2X2X1/2"
CORNER CLIP WITH
(4)#10-32X1/2" SCREWS
ALLOY: 6063-T5

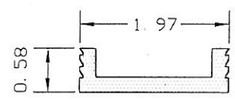

HPO-G4 1 9/16"
GLAZING GASKET

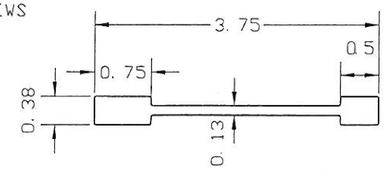

HPO-16HD - CONNECTING
MULLIONS BARS
ALLOY: 6063-T6

FRAME ASSEMBLY

WINDOW TYPE III
INTERMEDIATE HORIZONTAL ASSEMBLY

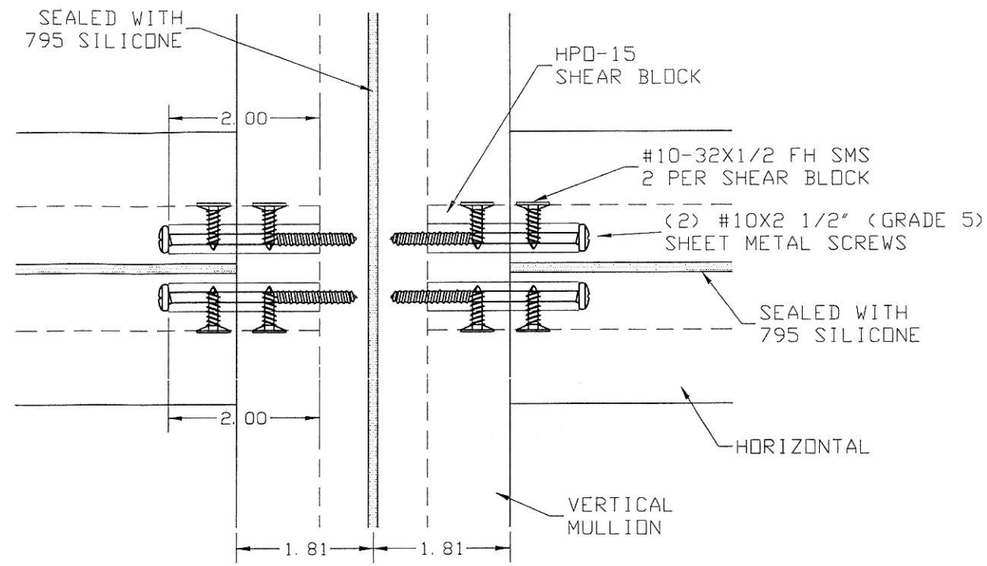

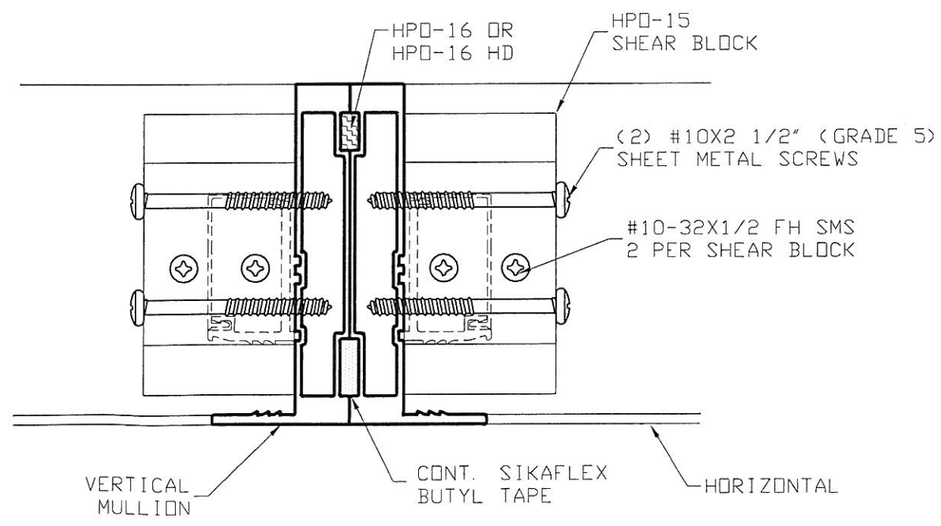

HMC
HURRICANE
MANUFACTURING
CORPORATION

11850 MIRAMAR PARKWAY
MIRAMAR - FL. - 33025
Phone: (954) 392-7933
Fax: (954) 392-7356

PRODUCT:
HMC 1000
ALUMINUM STOREFRONT

Engineering:
EngCo Inc.
CR 11234
5595 Orange Dr. 201
Davie, Fl. 33314
ENGCO@AOL.COM

STATE OF TEXAS
PEDRO FIGUEIREDO
102937
LICENSED
PROFESSIONAL ENGINEER

APR 26 2011

Engineer Seal
Pedro De Figueiredo
TEXAS - PE 102937

DRAFTING:
PK DRAFTING & MORE

Date: 04/26/2011
Scale: NA
Design by: PPMF

Drawing Number
11-086

SHEET
11 of 12

FRAME ASSEMBLY

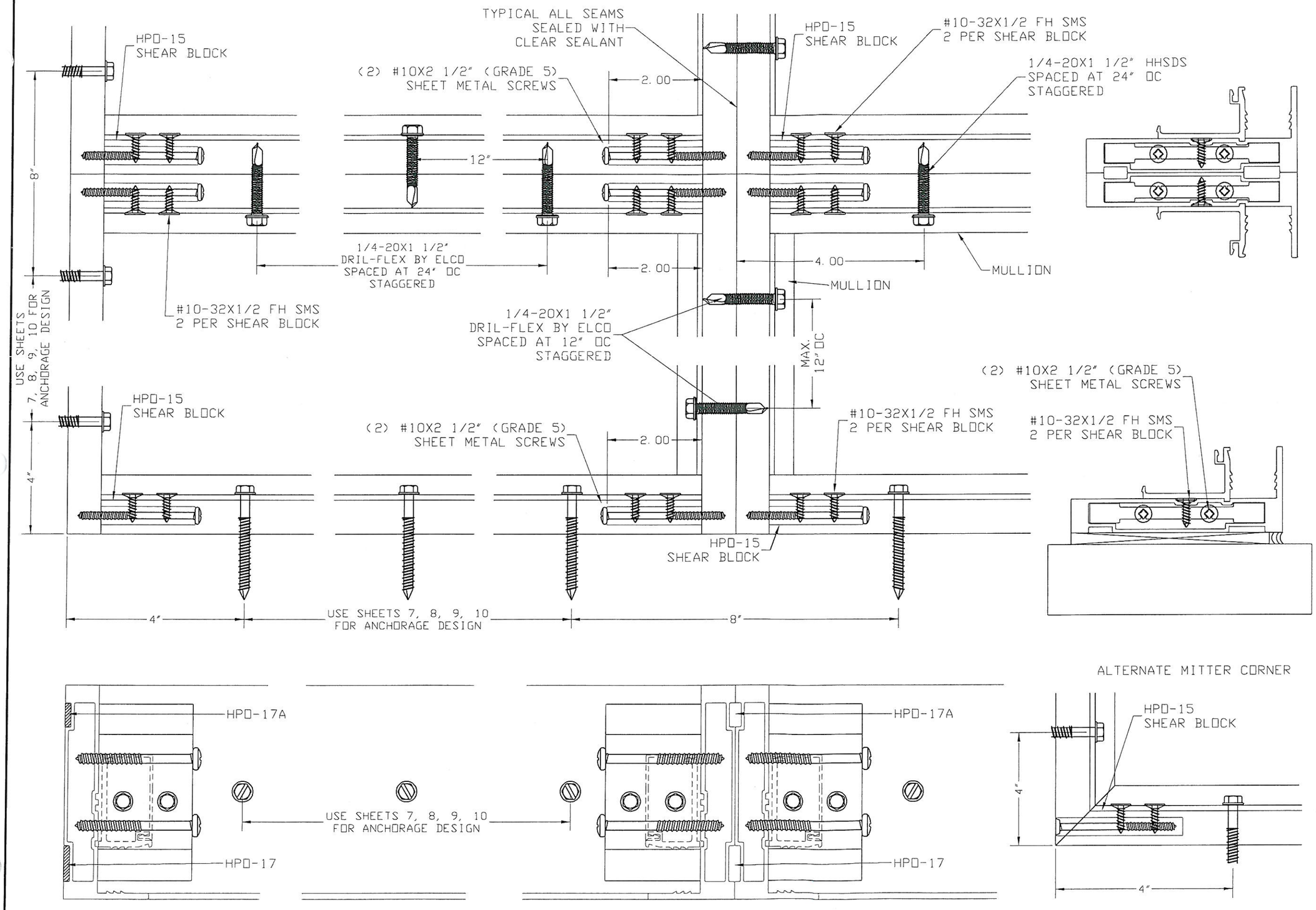

HMC
HURRICANE MANUFACTURING CORPORATION
11850 MIRAMAR PARKWAY
MIRAMAR - FL. - 33025
Phone: (954) 392-7933
Fax: (954) 392-7356

PRODUCT:
HMC 1000
ALUMINUM STOREFRONT

Engineering:
EngCo Inc.
CR 11234
5595 Orange Dr. 201
Davie, Fl. 33314
ENGCO@AOL.COM

STATE OF TEXAS
PEDRO FIGUEIREDO
102937
LICENSED
PROFESSIONAL ENGINEER
APR 26 2011

Engineer Seal
Pedro De Figueiredo
TEXAS - PE 102937

DRAFTING:
PK DRAFTING & MORE

Date: 04/26/2011
Scale: NA
Design by: PPMF

Drawing Number
11-086

SHEET
12 of 12